PCT WORLD INTELLECTUAL PROPERTY ORGANIZATION
International Bureau

INTERNATIONAL APPLICATION PUBLISHED UNDER THE PATENT COOPERATION TREATY (PCT)

(51) International Patent Classification 5 :		(11) International Publication Number:
G07D 1/00, G07F 5/24	A1	WO 92/02902
		(43) International Publication Date: 20 February 1992 (20.02.92)

(21) International Application Number: PCT/GB91/01204

(22) International Filing Date: 18 July 1991 (18.07.91)

(30) Priority data:
9017565.4 10 August 1990 (10.08.90) GB

(71) Applicant *(for all designated States except US)*: MARS INCORPORATED [US/US]; 6885 Elm Street, McLean, VA 22101-3883 (US).

(72) Inventor; and
(75) Inventor/Applicant *(for US only)* : WINSTANLEY, Nigel, Andrew [GB/GB]; 2 Culford Close, Lower Earley, Reading RG6 3AS (GB).

(74) Agent: R.G.C. JENKINS & CO.; 26 Caxton Street, London SW1H 0RJ (GB).

(81) Designated States: AT (European patent), AU, BE (European patent), BR, CA, CH (European patent), DE (European patent), DK (European patent), ES (European patent), FR (European patent), GB (European patent), GR (European patent), HU, IT (European patent), JP, KR, LU (European patent), NL (European patent), SE + (European patent), SU, US.

Published
With international search report.
Before the expiration of the time limit for amending the claims and to be republished in the event of the receipt of amendments.

(54) Title: COIN TESTING MECHANISM

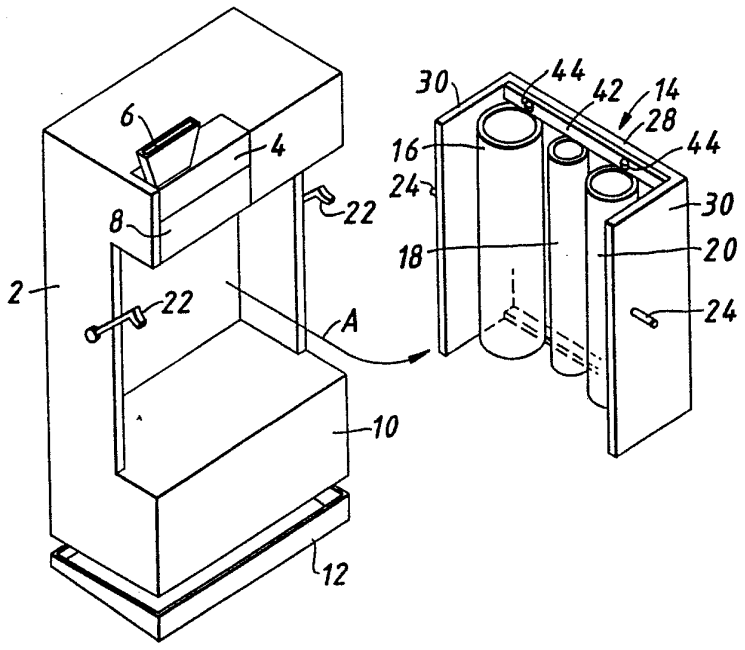

(57) Abstract

A coin testing mechanism of the kind provided with a removable and replaceable cassette (14) which includes a plurality of coin storage tubes (16, 18, 20), and means for dispensing coins (10) from the storage tubes, characterized in that the cassette is an assembly which comprises a plurality of storage tube modules (16, 18, 20) each of which modules comprises at least one storage tube, the modules being retained in the assembly by releasable and re-usable retaining means (26, 34) whereby to enable exchanging of one module of the cassette for another.

+ See back of page

+ DESIGNATIONS OF "SU"

It is not yet known for which States of the former Soviet Union any designation of the Soviet Union has effect.

FOR THE PURPOSES OF INFORMATION ONLY

Codes used to identify States party to the PCT on the front pages of pamphlets publishing international applications under the PCT.

AT	Austria	**ES**	Spain	**MG**	Madagascar
AU	Australia	**FI**	Finland	**ML**	Mali
BB	Barbados	**FR**	France	**MN**	Mongolia
BE	Belgium	**GA**	Gabon	**MR**	Mauritania
BF	Burkina Faso	**GB**	United Kingdom	**MW**	Malawi
BG	Bulgaria	**GN**	Guinea	**NL**	Netherlands
BJ	Benin	**GR**	Greece	**NO**	Norway
BR	Brazil	**HU**	Hungary	**PL**	Poland
CA	Canada	**IT**	Italy	**RO**	Romania
CF	Central African Republic	**JP**	Japan	**SD**	Sudan
CG	Congo	**KP**	Democratic People's Republic of Korea	**SE**	Sweden
CH	Switzerland			**SN**	Senegal
CI	Côte d'Ivoire	**KR**	Republic of Korea	**SU+**	Soviet Union
CM	Cameroon	**LI**	Liechtenstein	**TD**	Chad
CS	Czechoslovakia	**LK**	Sri Lanka	**TG**	Togo
DE	Germany	**LU**	Luxembourg	**US**	United States of America
DK	Denmark	**MC**	Monaco		

COIN TESTING MECHANISM

This invention relates to coin testing mechanisms and in particular coin testing mechanisms of the kind provided with a removable and replaceable cassette which includes a plurality of coin storage tubes, and means for dispensing coins from the storage tubes. Such dispensing is required for the purpose of paying out change or giving prizes.

There are many published patent applications and granted patents which describe and show coin mechanisms in which such cassettes are used, and large numbers of coin mechanisms incorporating such cassettes have been manufactured and sold.

It has been the common practice for the coin storage tubes of the cassette to all be formed in a single injection-moulded part, in plastics material, or for the cassette to be assembled from two parts each of which is injection moulded in plastics material, one of the parts including the fronts of all the coin tubes and other of the parts including their backs, so that each coin tube is effectively constructed from two parts, a front and a back.

For the purpose of this specification the term "coin storage tube" is intended to encompass any structure capable of holding coins in a stable stack one above the other face-to-face, irrespective of

whether or not it completely surrounds the stack and irrespective of whether or not it is of a generally circular cross-section.

One object of the present invention is to provide coin mechanisms in which a cassette including coin tubes is used, but in which the adaptability of the cassette is improved and the cost of manufacturing cassettes for storing different combinations of coins is reduced.

The invention provides a coin testing mechanism of the kind provided with a removable and replaceable cassette which includes a plurality of coin storage tubes, and means for dispensing coins from the storage tubes, characterised in that the cassette is an assembly which comprises a plurality of storage tube modules each of which modules comprises at least one storage tube, the modules being retained in the assembly by releasable and re-usable retaining means whereby to enable exchanging of one module of the cassette for another.

The invention facilitates modifying an existing coin mechanism so that it can store a different set of coin denominations from previously, and also modifying an existing coin mechanism so that it can store a newly introduced size of coin, even though the denomination of that coin may be the same as the

previously used but differently sized coin of that denomination. It will be understood, of course, that the coins of the world vary very greatly in diameter and although a single coin tube internal diameter may be usable for coins of a range of different diameters, nevertheless a selection of coin tubes having different internal diameters will be required in order for an appropriate internal diameter for each of the commonly used coins, or at least most of them, to always be available.

By the use of the invention, a coin tube already in the cassette can readily be removed therefrom after the cassette has been detached from its coin mechanism and a tube of a different diameter can be easily installed in its place.

Previously known coin tube cassettes would have required replacement of the entire cassette in order for the coin mechanism to be comparably adapted for storing a different set of coins.

At the manufacturing stage, previous coin tube cassettes would have required separate, and relatively expensive, tooling for each particular combination of tube internal diameters to be incorporated into a cassette.

The invention enables the manufacture of cassettes having various different combinations of

internal tube diameters, by manufacturing on relatively simple and inexpensive tooling tubes having a limited number of different internal diameters, perhaps six or seven, and then assembling these into cassettes using the releasable and re-usable retaining means, in whatever combinations may be required for the particular coin mechanisms being manufactured.

In order that the invention may be more clearly understood, an embodiment thereof will now be described, by way of example, with reference to the accompanying diagrammatic drawings in which:

Figure 1 shows a coin testing mechanism in accordance with the invention with its coin tube cassette removed,

Figure 2 illustrates a part of the cassette and shows in particular the releasable and re-usable retaining means for retaining a coin tube in the cassette, and

Figure 3 shows a cross-section through Figure 2, taken in the direction III-III, when the coin tube has been assembled into position.

In many respects the coin testing mechanism shown in Figure 1 is conventional. It includes a mainframe 2 into which are fitted a coin tester or validator 4 having a coin inlet 6. In conventional manner the

coin tester 4 tests coins to determine whether they meet acceptability criteria for the particular mechanism. If not, it rejects them for retrieval by the user. Acceptable coins pass to a coin separator 8 which routes them, according to their denomination as determined by the testing section 4, to respective coin storage tubes each of which is for receiving one particularly denomination, or alternatively to a cashbox if the proper coin storage tube is full or if the coin denomination involved is not one which is intended to be dispensed.

A coin dispensing section 10 is located below the coin tubes and may be of conventional kind, being operable to dispense coins one-by-one from the bottom ends of the respective coin tubes in whatever combinations may be appropriate for giving change or prizes, the dispensed coins falling into a tray 12 beneath the mechanism for collection by the user.

A cassette is shown generally at 14, which includes three coin tubes 16, 18 and 20 (though in practice four tubes would often be present, or perhaps more). In its operative position, the cassette fits into the recess at the front of the coin testing mechanism as illustrated in Figure 1, where it is held by hand-operable fastening means such as the pivotable hooks 22 which can be engaged over pegs 24 located on

either side of the cassette. This enables easy removal of the cassette from the mechanism as illustrated by the arrow A and also easy replacement of the cassette in the mechanism.

The three coin tubes may all be substantially the same, apart from their diameters, though of course it will not normally be necessary for every coin tube in a mechanism to be different from that of all the other coin tubes.

Figure 2 and Figure 3 show, just by way of example, the coin tube 18 which may be injection moulded in a single piece from plastics material with two bars 26 moulded integrally with it, the bars extending transversely of the tube and being located respectively near to its upper and its lower ends.

The cassette 14 includes a generally channel-shaped tube support having a front wall 28 and two side walls 30. It also has an abutment in the form of a narrow shelf 32 extending across the lower edge of the front wall 28. On the inside of the front wall 28 are pairs of T-shaped projections 34. The tube support may be manufactured as a single part by injection moulding from plastics material.

To assemble tube 18 to the tube support it is turned from the position shown in Figure 2 and the bars 26 are placed against the inside of the front

wall 28 between and above the respective pairs of projections 34 (ie above and to the right of them in the orientation shown in Figure 2). The tube 18 is then pushed in the direction of the arrowhead B so that the opposed ends of the bars 26 enter under opposed arms of respective pairs of projections 34 as shown in Figure 3, while the chamfered ends of the arms of the projections 34, indicated at 36 in Figure 3, contact the curved outer wall of tube 18.

The components are dimensioned so that the retaining means are an interference fit and some manual force is required to push the tube 18 in the direction of arrow B. Its movement in this direction is limited by an edge 38 of an arcuate cut-out 40 of the lower end of tube 18 contacting the upper surface of the abutment 32.

The depth of the cut-out 40, in the axial direction of the tube, may be made such that when the tube has been fully pushed into contact with the abutment 32 its lower edge is a predetermined distance below the bottom edge of that abutment and consequently is in a predetermined position relative to the dispensing section 10 when the cassette is installed into the coin testing mechanism. This may be important for the correct operation of the dispensing section, depending upon its exact design,

as is well known.

The tubes 16 and 20 can be retained in basically the same way as tube 18. Bars 26 on them can engage under the outwardly facing arms of the T-shaped projections 34, and also under the arms of similar additional projections (not shown) also formed on the inner face of the front wall 28 relatively near to the side walls 30 so that the other ends of the bars 26 on tubes 16 and 20 are similarly engaged.

It should be appreciated that various forms of snap-fitting could be utilised in place of the push-fitting retaining means 26, 34 which have been illustrated. It is preferable for the retaining means not to require the use of tools for the purpose of releasing and replacing the coin tubes so that this can be done most quickly and efficiently by an operator when the coin mechanism is out in the field, and so that the cassette can be most efficiently assembled where it is being manufactured.

If desired, locking means may also be provided for locking the coin tubes into position. In Figure 1 such locking means is shown in the form of a bar 42 secured across and in contact with the upper edges of tubes 16, 18 and 20 by means of two screws 44 which are screwed into the front wall 28. For additional simplicity in removing and replacing the tubes, the

screws 44 could be replaced by any suitable design of finger-operable fastener.

Although in the embodiment described each individual coin tube is formed separately, it is possible that in practice a particular combination of two specific coin tube diameters may be required, adjacent to each other, sufficiently often that it is economic to manufacture those two particular tube sizes as a single part, thus forming a module which includes two tubes. The term "storage tube module" is used in the accompanying claims to encompass a component of this sort which includes more than just one coin storage tube.

CLAIMS:

1. A coin testing mechanism of the kind provided with a removable and replaceable cassette (14) which includes a plurality of coin storage tubes (16,18,20), and means for dispensing coins (10) from the storage tubes, characterised in that the cassette is an assembly which comprises a plurality of storage tube modules (16,18,20) each of which modules comprises at least one storage tube, the modules being retained in the assembly by releasable and re-usable retaining means (26,34) whereby to enable exchanging of one module of the cassette for another.

2. A coin testing mechanism as claimed in claim 1 wherein the cassette assembly comprises a tube support and the retaining means are adapted to secure the tube modules to the tube support.

3. A coin testing mechanism as claimed in claim 1 or claim 2 wherein the retaining means for each module are independent of each other, whereby each module can be removed from the cassette independently of the others.

4. A coin testing mechanism as claimed in any

preceding claim wherein the retaining means are push- or snap-fittings operable by hand to retain and release each module.

5. A coin testing mechanism as claimed in any one of claims 2 to 4 wherein the tube support includes abutment means for providing a defined limit upon downward movement of the tube modules when in their upright operating position.

6. A coin testing mechanism as claimed in any preceding claim wherein in addition to the retaining means, locking means is provided for locking the modules in position.

7. A coin testing mechanism as claimed in any preceding claim comprising fastening means operable by hand to enable removal and replacement of the cassette from, and its replacement in, the mechanism.

8. A cassette assembly for a coin testing mechanism, and having the features specified in any one of the preceding claims.

FIG. 1.

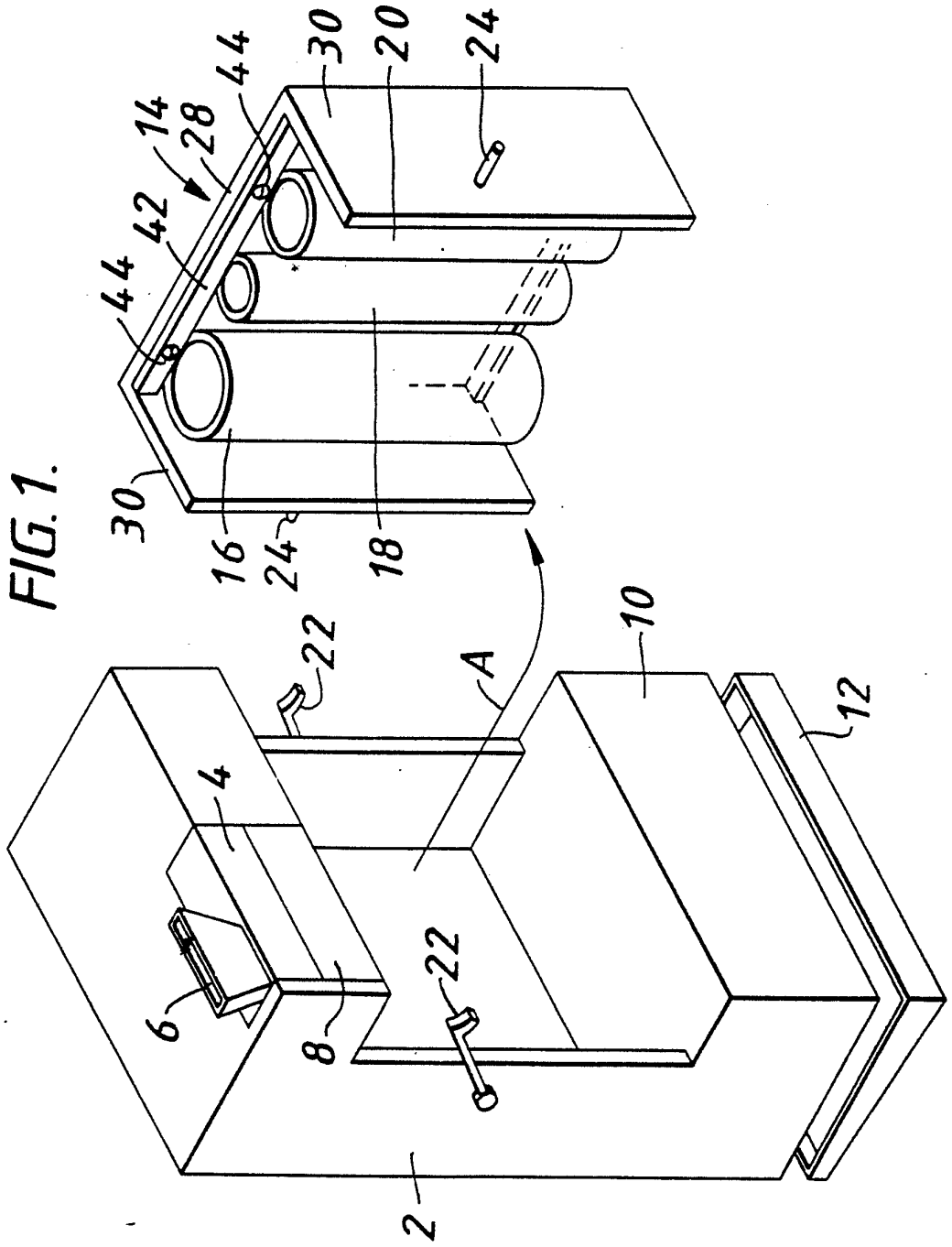

FIG.2.

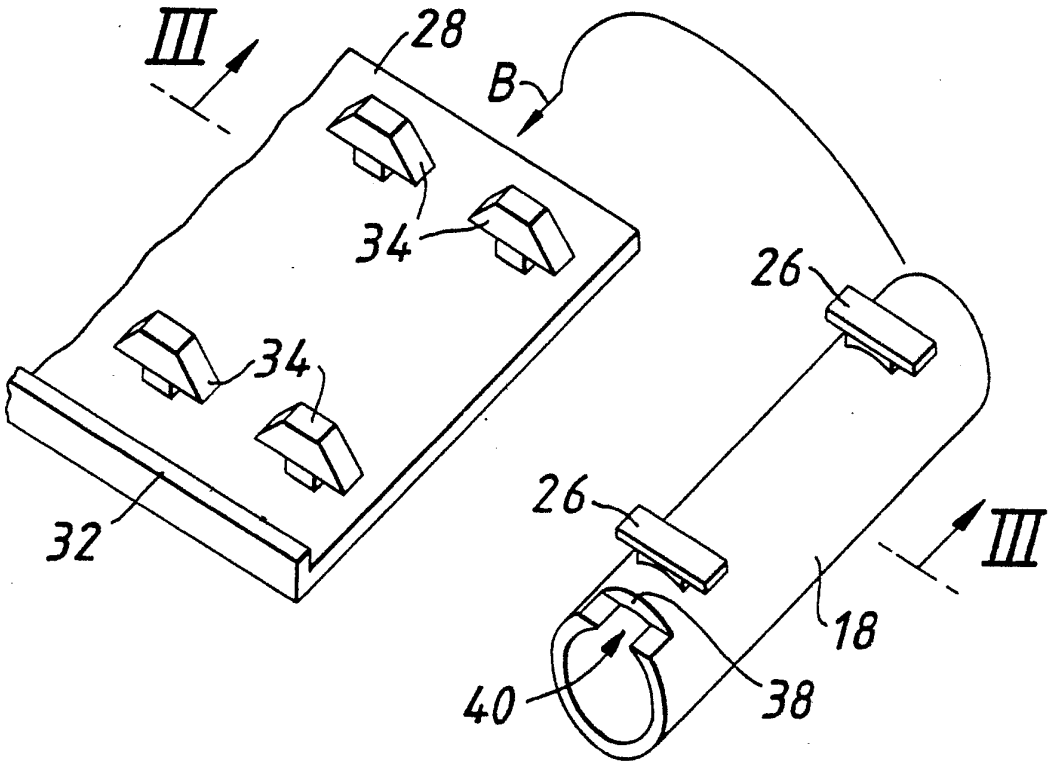

FIG.3.

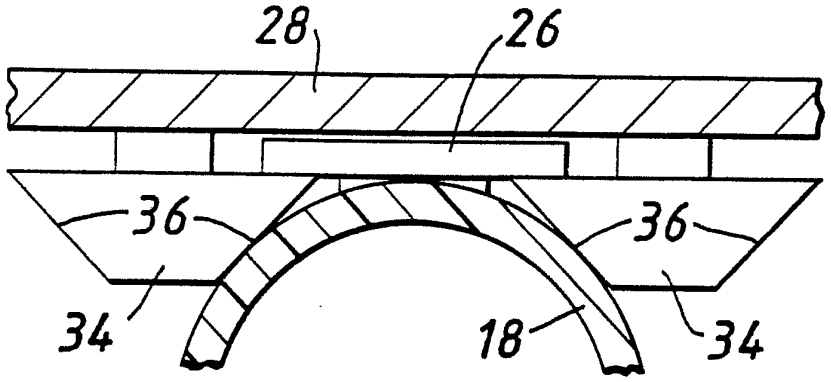

INTERNATIONAL SEARCH REPORT

International Application No PCT/GB 91/01204

I. CLASSIFICATION OF SUBJECT MATTER (if several classification symbols apply, indicate all)[6]

According to International Patent Classification (IPC) or to both National Classification and IPC

Int.Cl. 5 G07D1/00; G07F5/24

II. FIELDS SEARCHED

Minimum Documentation Searched[7]

Classification System	Classification Symbols
Int.Cl. 5	G07D ; G07F

Documentation Searched other than Minimum Documentation to the Extent that such Documents are Included in the Fields Searched[8]

III. DOCUMENTS CONSIDERED TO BE RELEVANT[9]

Category °	Citation of Document, [11] with indication, where appropriate, of the relevant passages [12]	Relevant to Claim No.[13]
X	US,A,4 326 550 (D. MOCHIZUKI) 27 April 1982 see column 4, line 1 - line 62; figures 4,5	1-4,7,8
A	GB,A,2 065 950 (NIPPON COINCO) 1 July 1981 see abstract; figures	1,2,7,8
A	FR,A,1 331 794 (STAAR) 27 May 1963 résumé see figures	1,3,4
A	DE,A,2 455 772 (PROF. ALFRED KRAUTH APPARATEBAU) 12 August 1976	

° Special categories of cited documents : [10]

"A" document defining the general state of the art which is not considered to be of particular relevance

"E" earlier document but published on or after the international filing date

"L" document which may throw doubts on priority claim(s) or which is cited to establish the publication date of another citation or other special reason (as specified)

"O" document referring to an oral disclosure, use, exhibition or other means

"P" document published prior to the international filing date but later than the priority date claimed

"T" later document published after the international filing date or priority date and not in conflict with the application but cited to understand the principle or theory underlying the invention

"X" document of particular relevance; the claimed invention cannot be considered novel or cannot be considered to involve an inventive step

"Y" document of particular relevance; the claimed invention cannot be considered to involve an inventive step when the document is combined with one or more other such documents, such combination being obvious to a person skilled in the art.

"&" document member of the same patent family

IV. CERTIFICATION

Date of the Actual Completion of the International Search	Date of Mailing of this International Search Report
09 DECEMBER 1991	20. 12. 91
International Searching Authority	**Signature of Authorized Officer**
EUROPEAN PATENT OFFICE	DAVID J.Y.H.

ANNEX TO THE INTERNATIONAL SEARCH REPORT ON INTERNATIONAL PATENT APPLICATION NO. GB 9101204 SA 49537

This annex lists the patent family members relating to the patent documents cited in the above-mentioned international search report. The members are as contained in the European Patent Office EDP file on
The European Patent Office is in no way liable for these particulars which are merely given for the purpose of information. 09/12/91

Patent document cited in search report	Publication date	Patent family member(s)	Publication date
US-A-4326550	27-04-82	JP-A- 55076487	09-06-80
		JP-A- 55076488	09-06-80
		JP-C- 1194384	12-03-84
		JP-A- 55078393	12-06-80
		JP-B- 58022788	11-05-83
		DE-A,C 2946961	22-05-80
GB-A-2065950	01-07-81	DE-A,C 3041473	21-05-81
FR-A-1331794		None	
DE-A-2455772	12-08-76	None	