US 20090151050A1

(19) United States

(12) Patent Application Publication

(10) Pub. No.: US 2009/0151050 A1

(43) Pub. Date: Jun. 18, 2009

Williams

(54) SOCK WITH GRIPPING DOTS AND A METHOD OF MAKING SAME

(76) Inventor: **Cole Williams**, Bainbridge Island, WA (US)

Correspondence Address:
JAMES E. BRUNTON, ESQ.
P. O. BOX 29000
GLENDALE, CA 91209 (US)

(21) Appl. No.: **12/321,022**

(22) Filed: **Jan. 14, 2009**

Related U.S. Application Data

(62) Division of application No. 11/187,088, filed on Jul. 22, 2005.

Publication Classification

(51) **Int. Cl.**
A43B 17/00 (2006.01)
A41D 27/00 (2006.01)

(52) **U.S. Cl.** **2/239**; 2/243.1

(57) **ABSTRACT**

A sock construction that substantially prevents wrinkling and bunching of the sock within the shoe. The sock construction includes a multiplicity of strategically located gripping dots disposed on the interior surface of the sock which effectively resist slippage of the sock relative to the user's foot. The gripping dots are strategically positioned so as not to restrict blood flow to the foot and so as not to inhibit normal blood circulation within the foot.

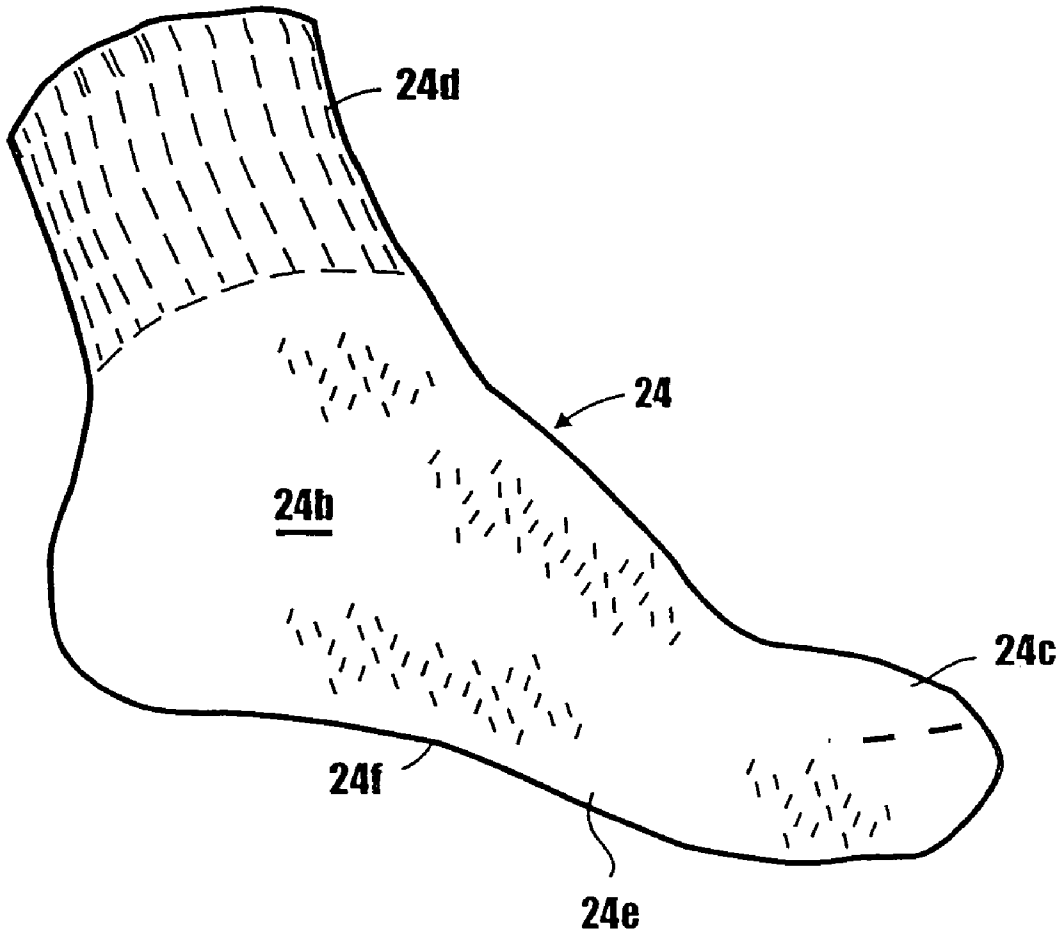

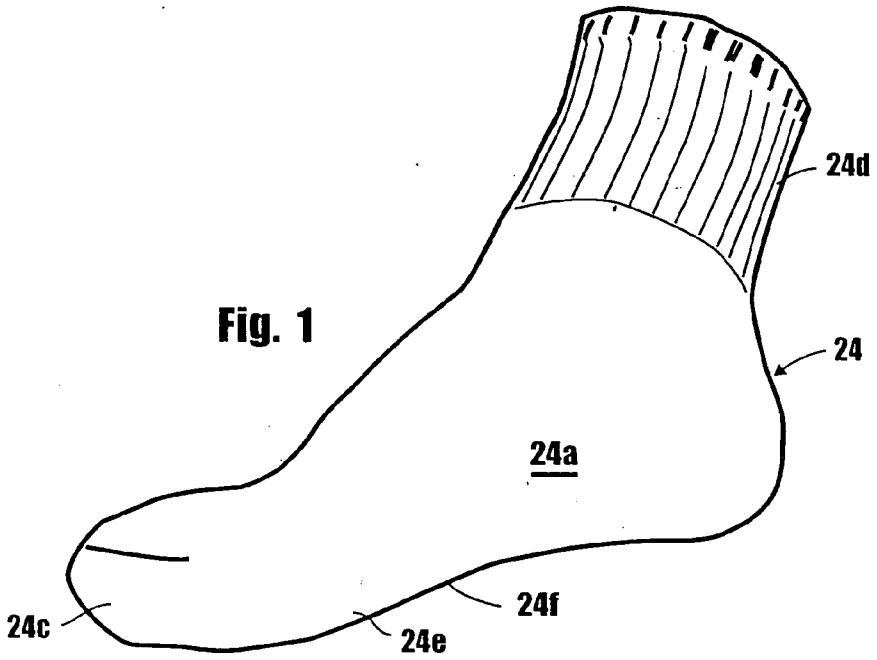

Fig. 1

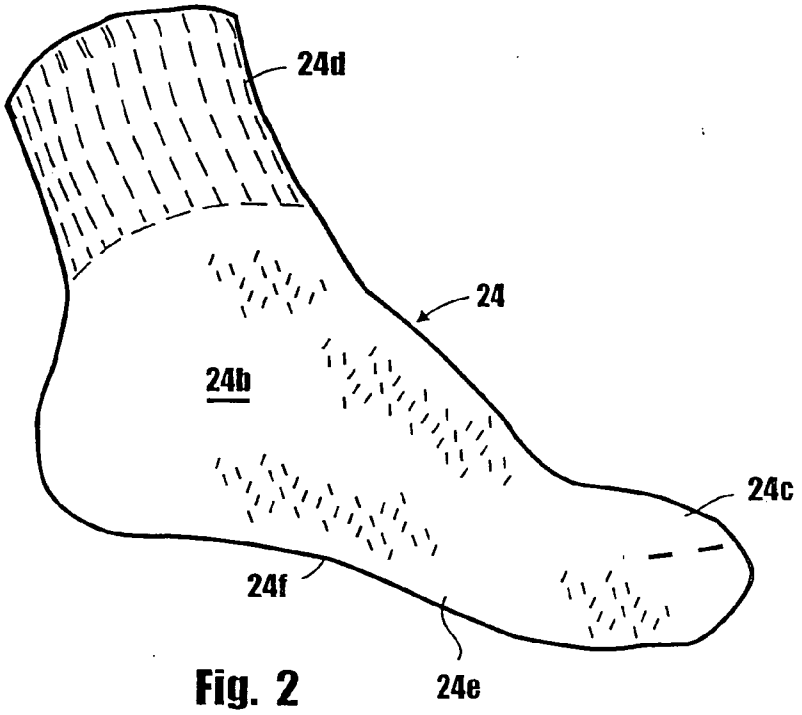

Fig. 2

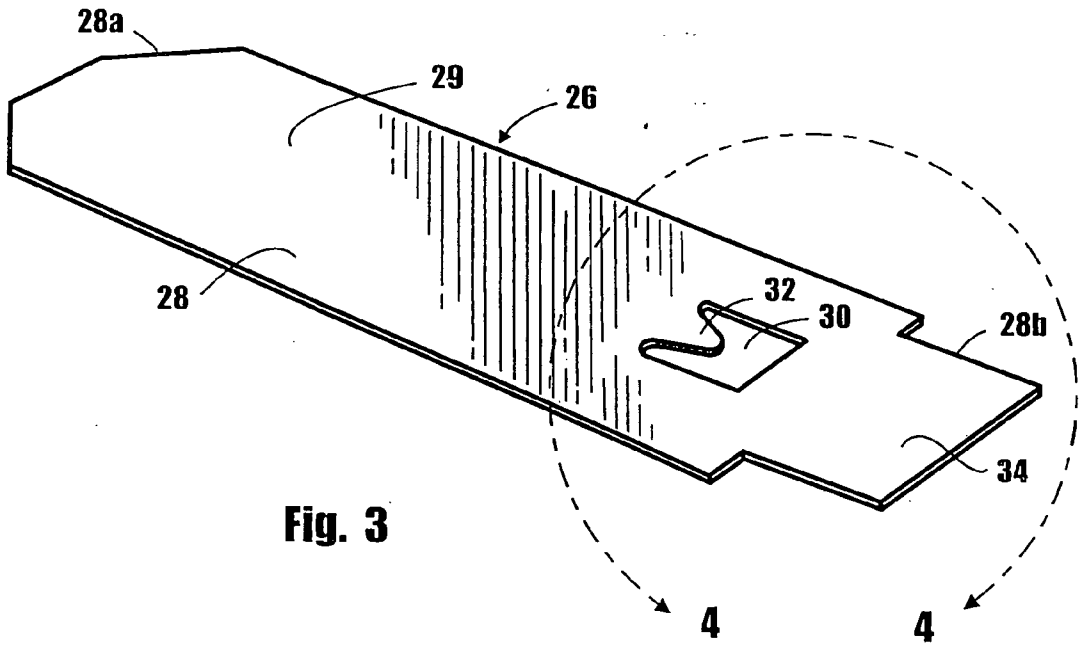

Fig. 3

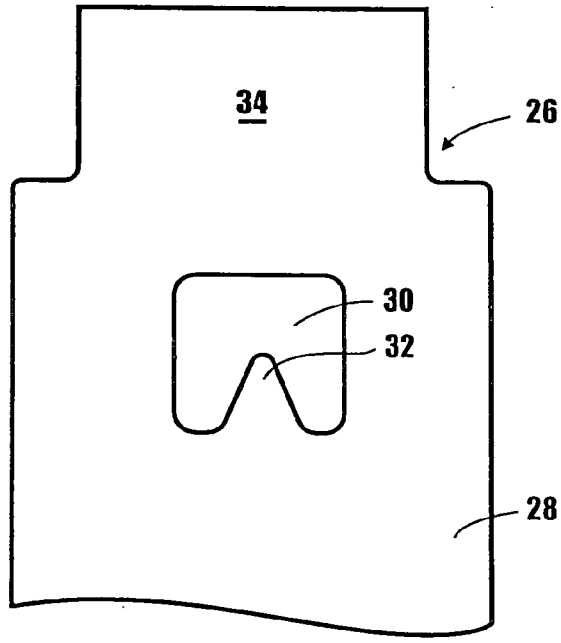

Fig. 4

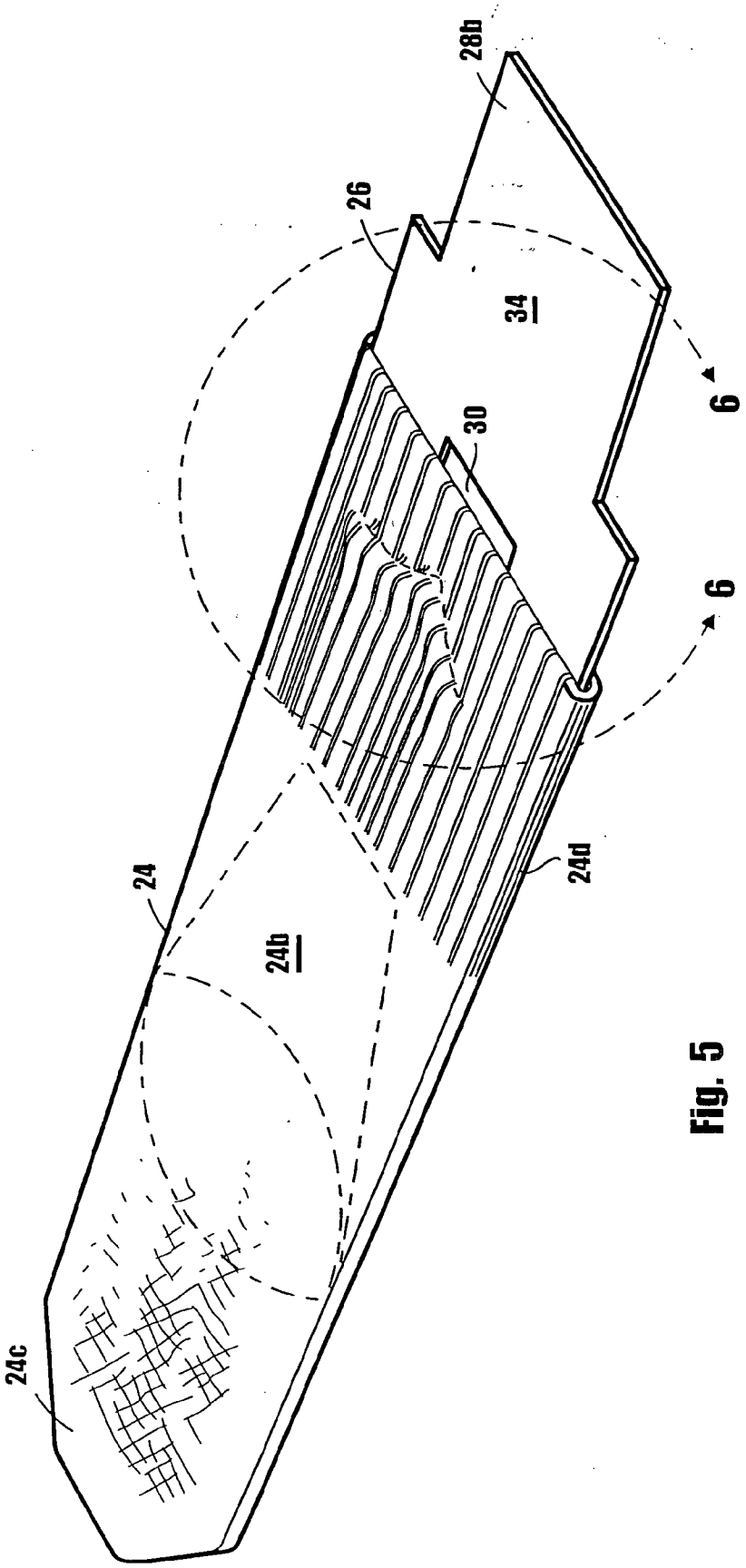

Fig. 5

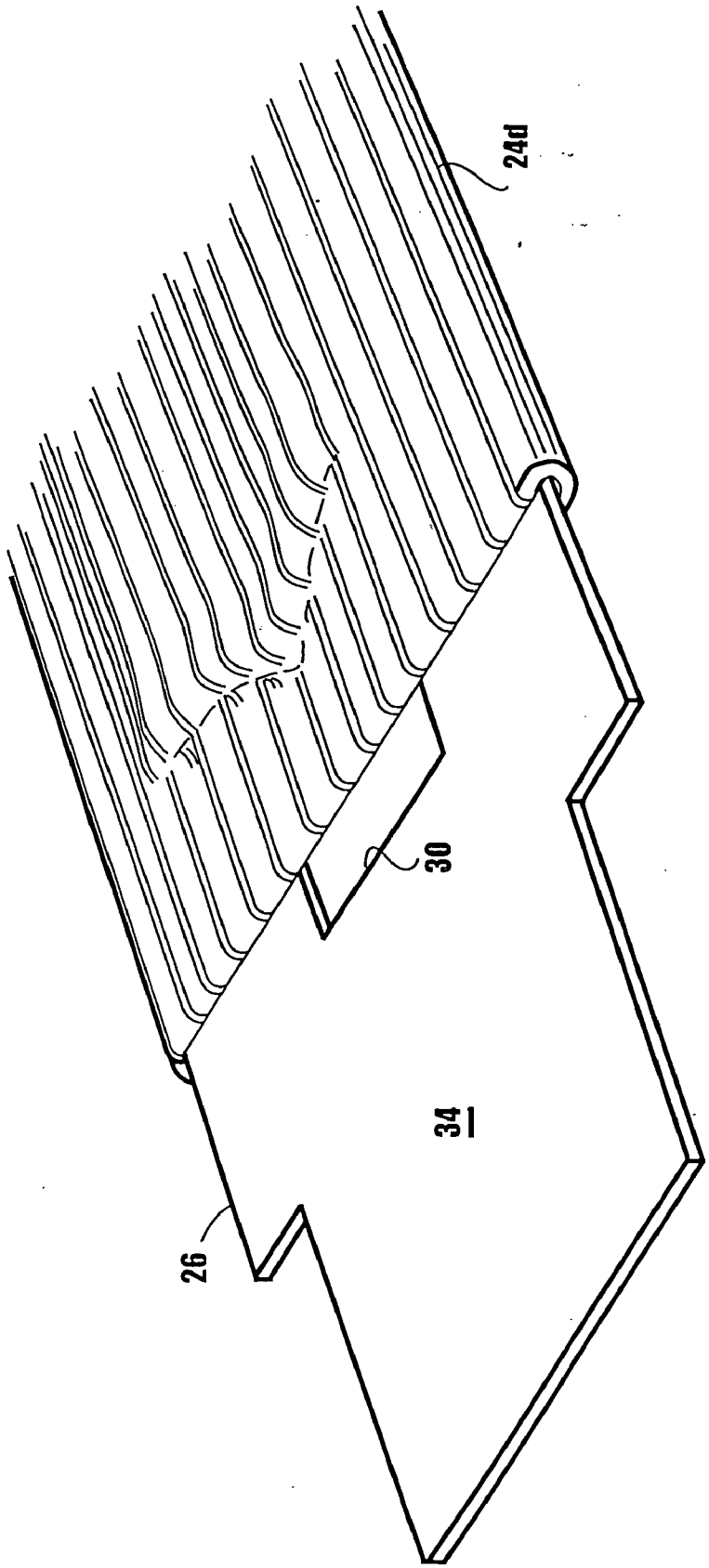

Fig. 6

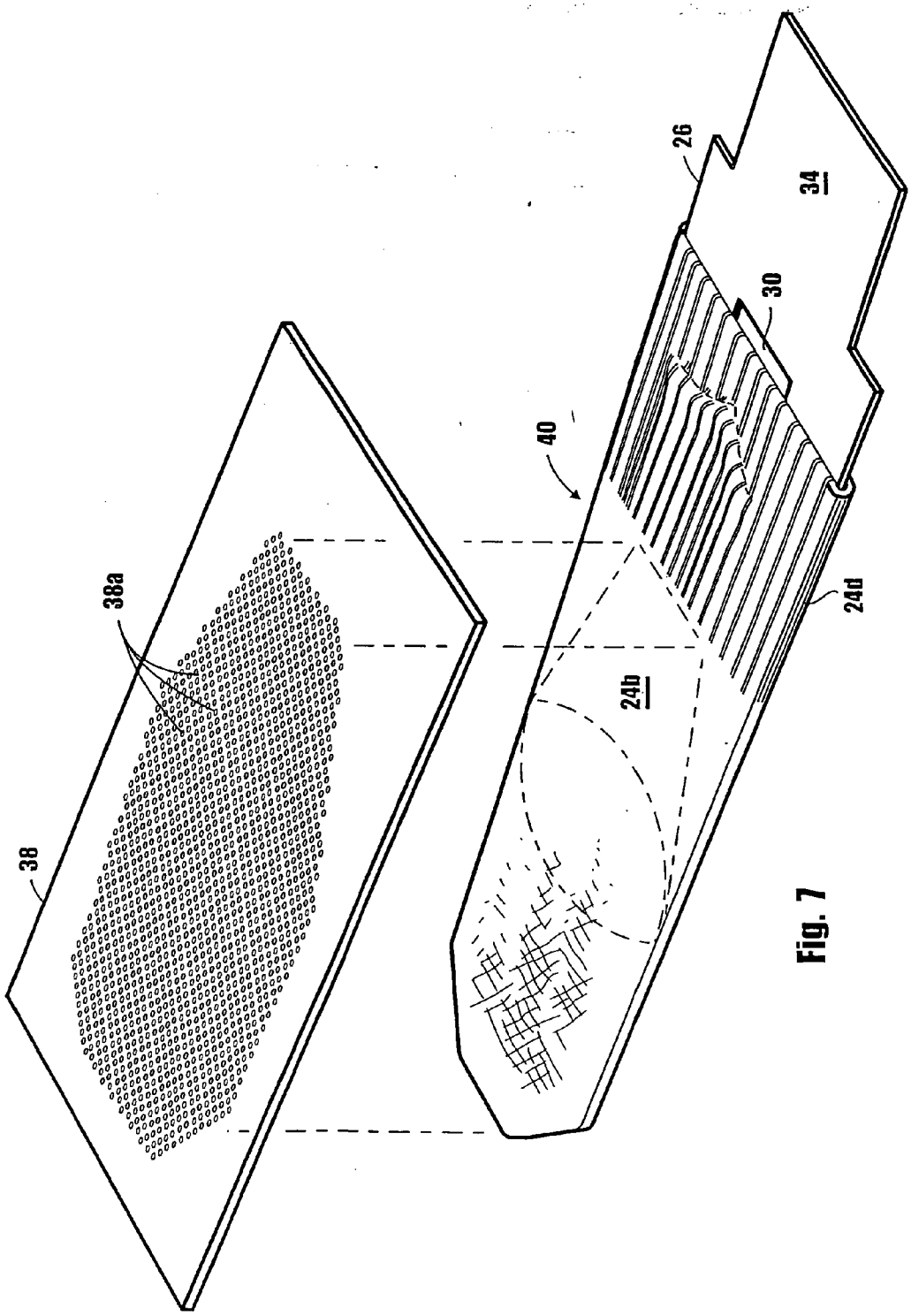

Fig. 7

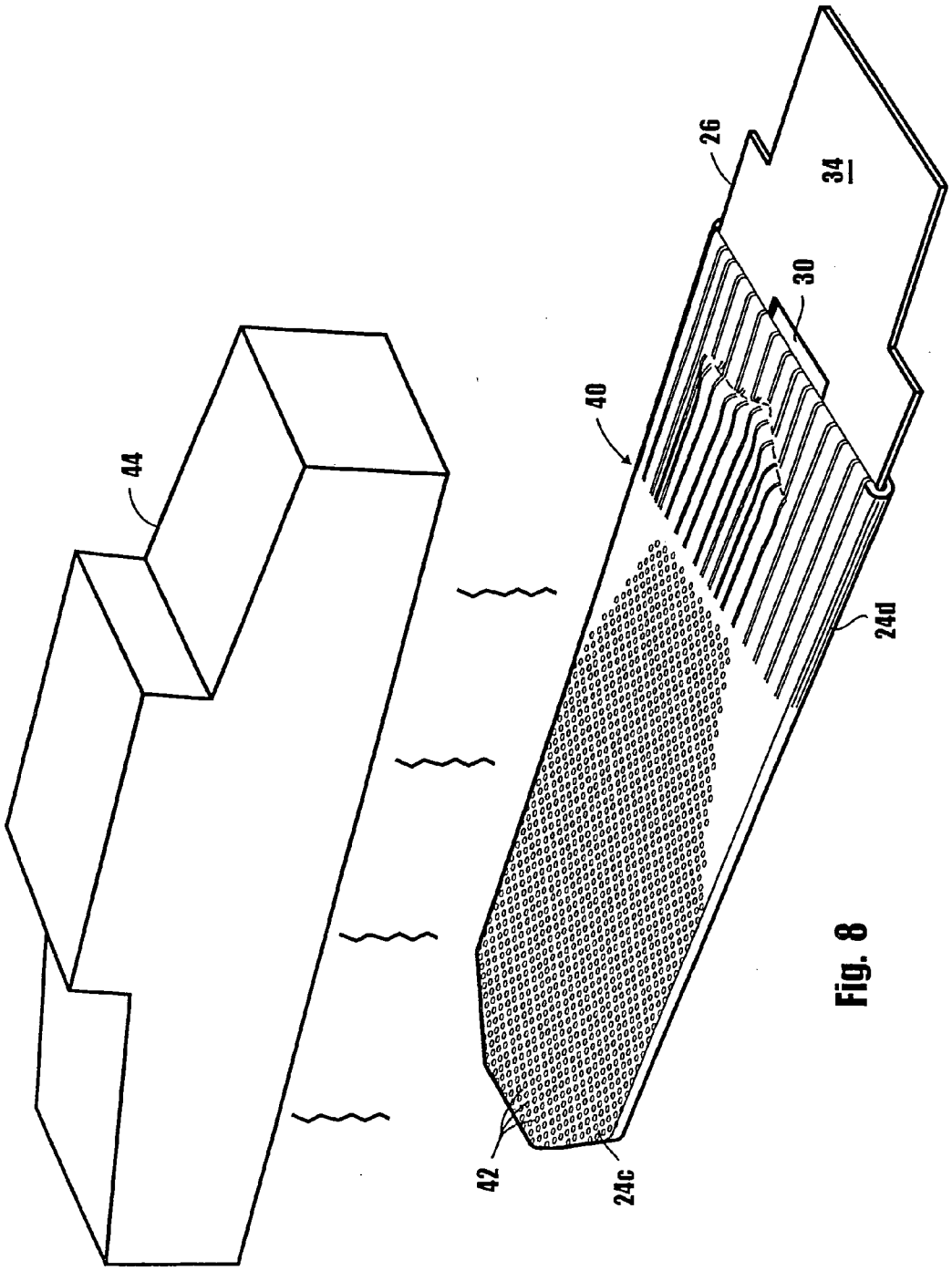

Fig. 8

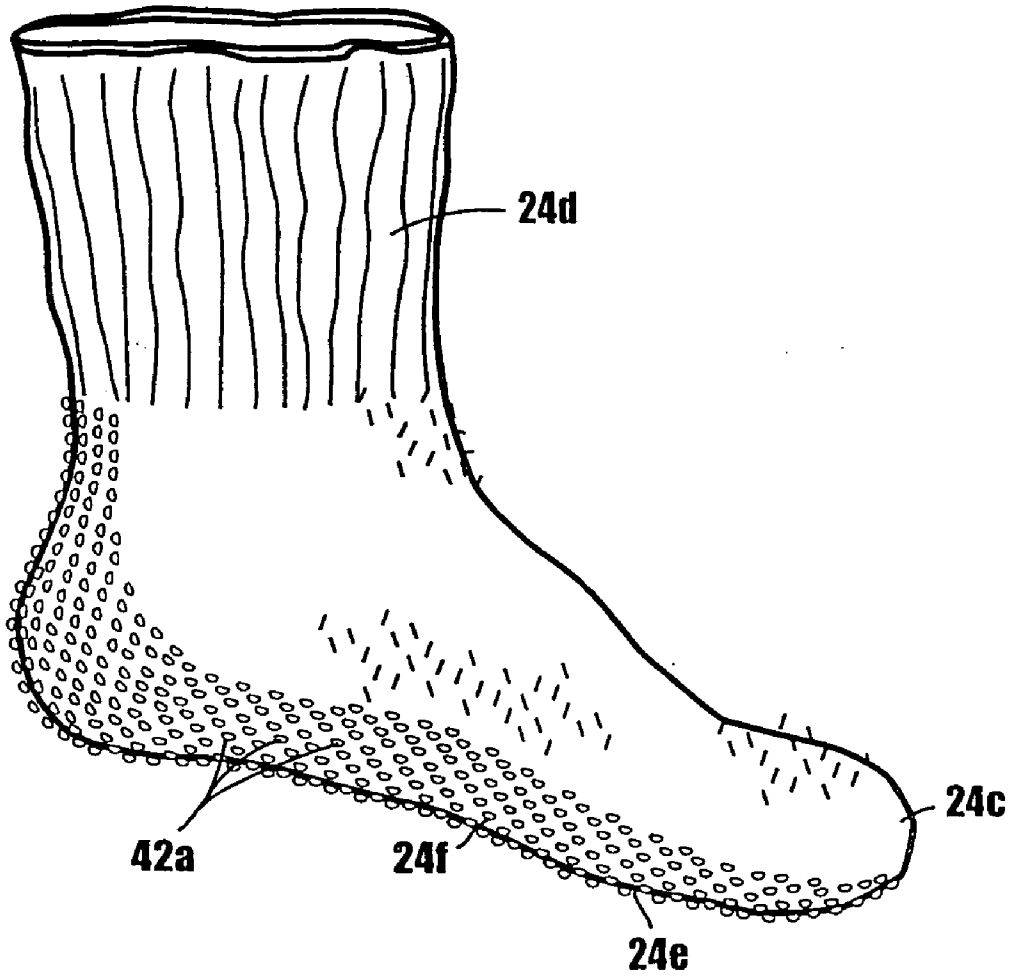

Fig. 9

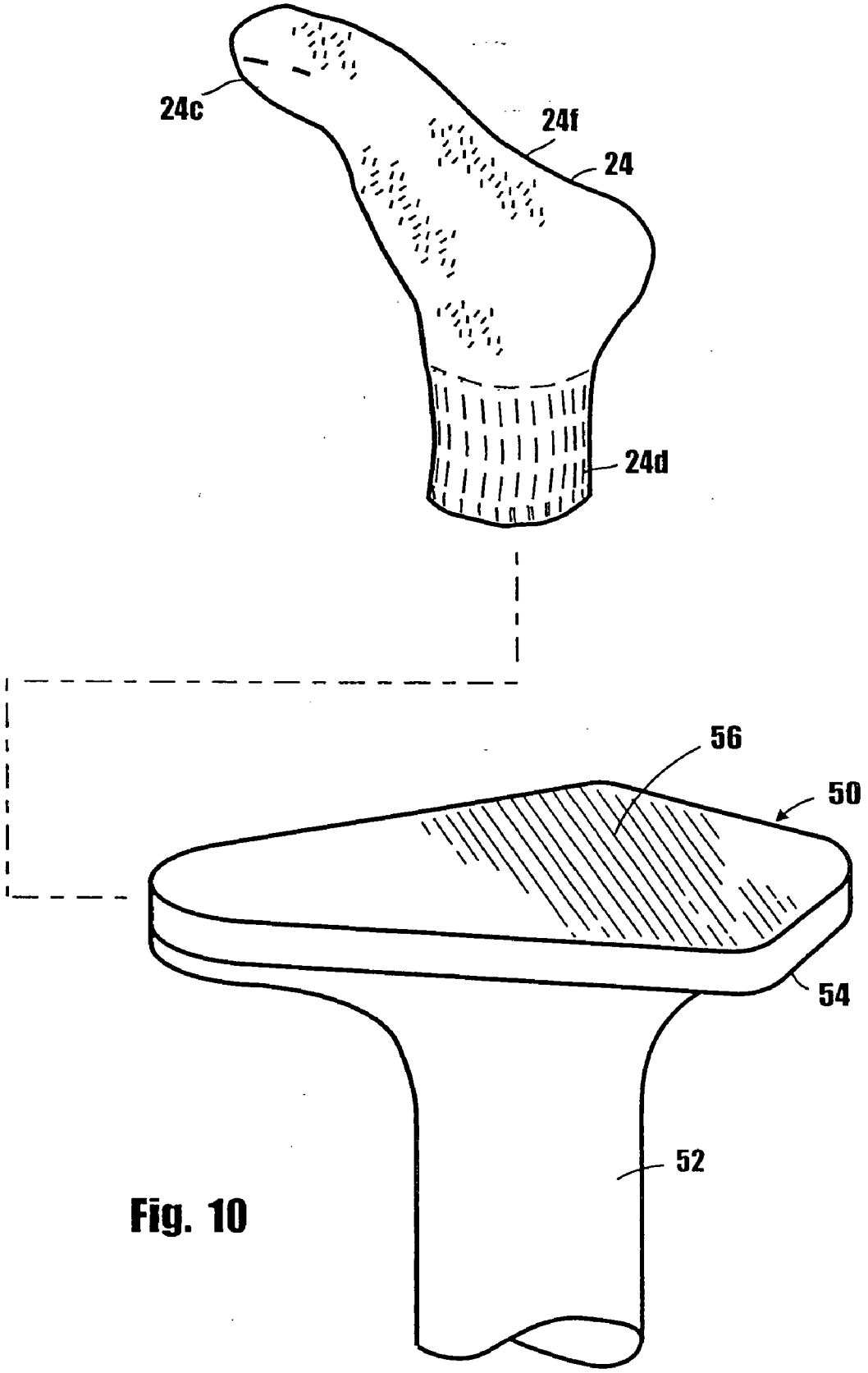

Fig. 10

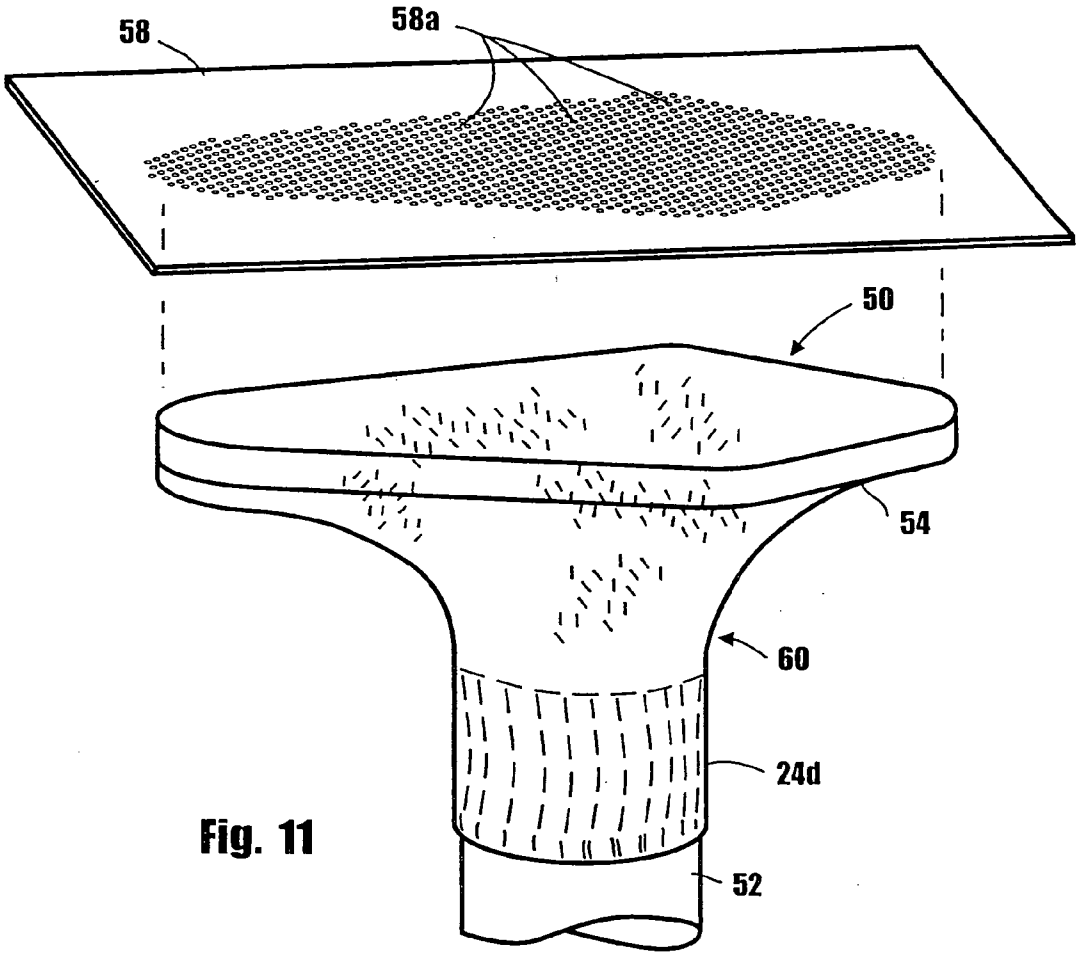

Fig. 11

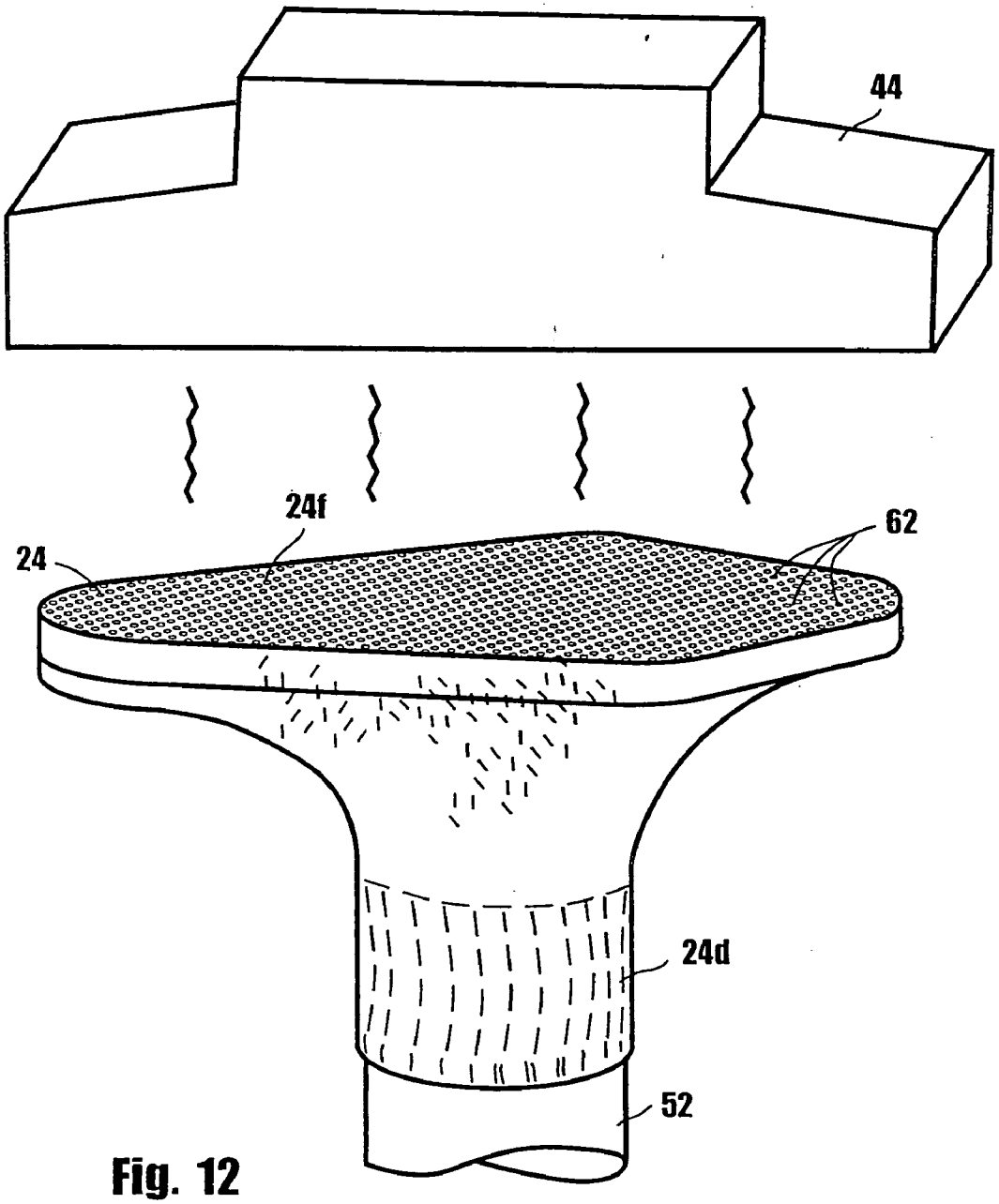

Fig. 12

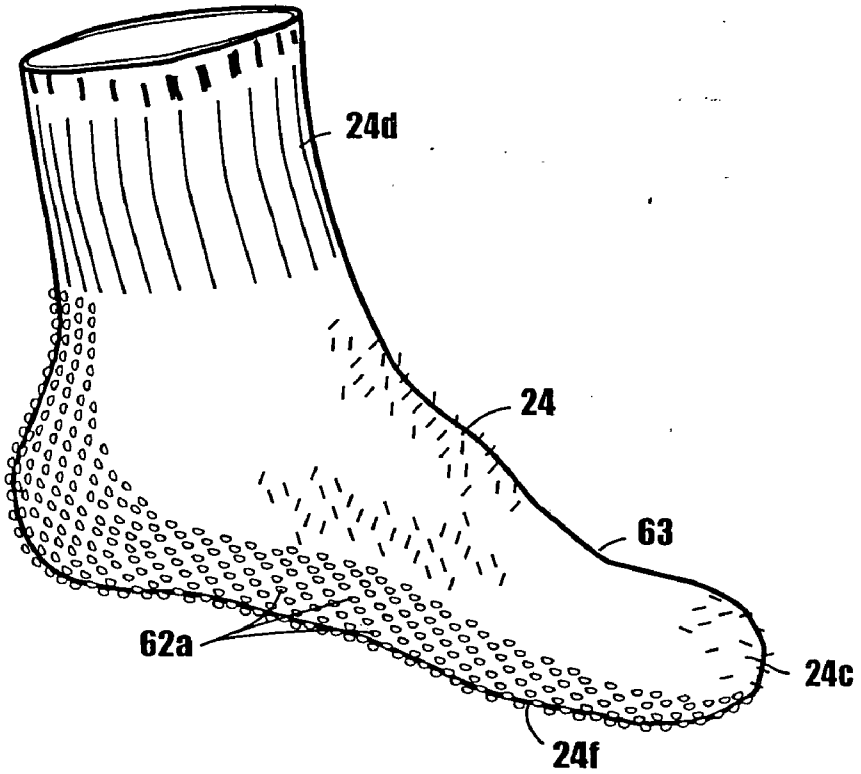

Fig. 13

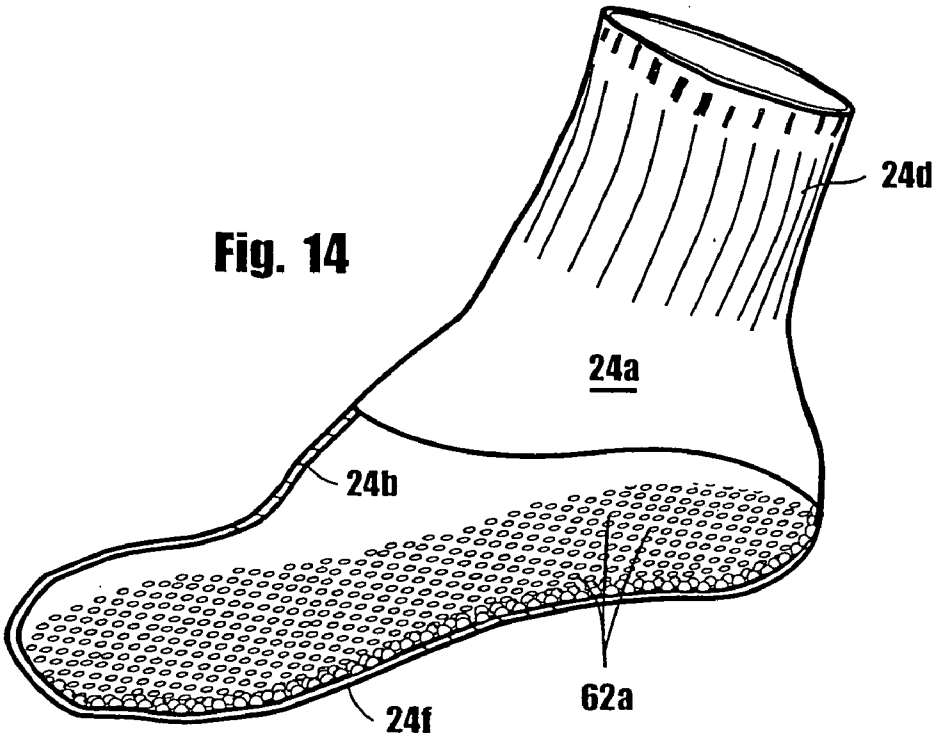

Fig. 14

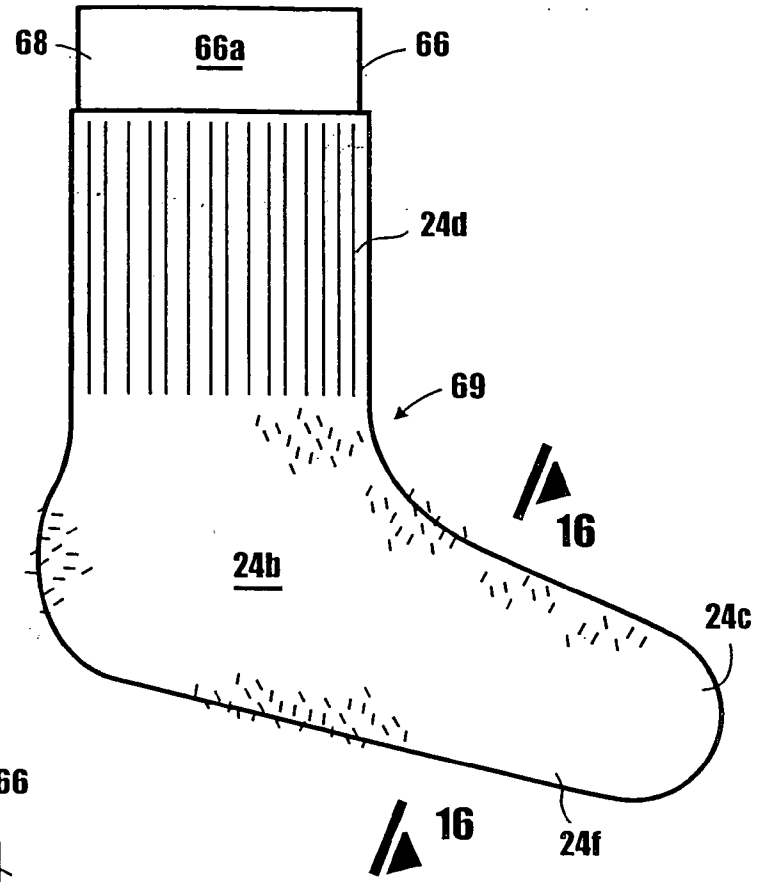

Fig. 15

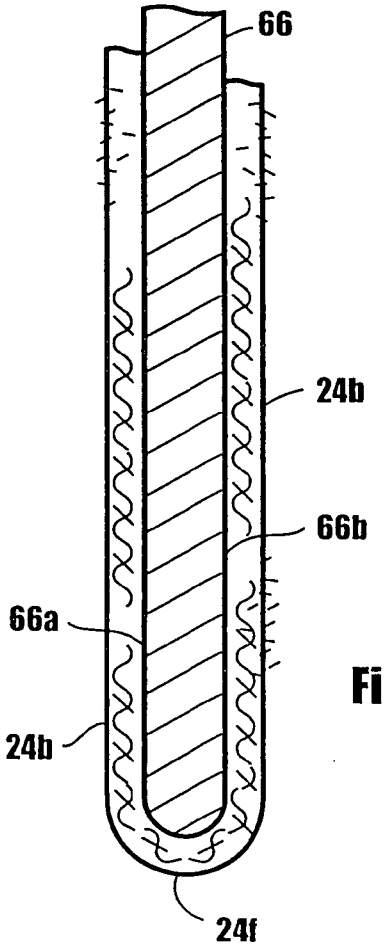

Fig. 16

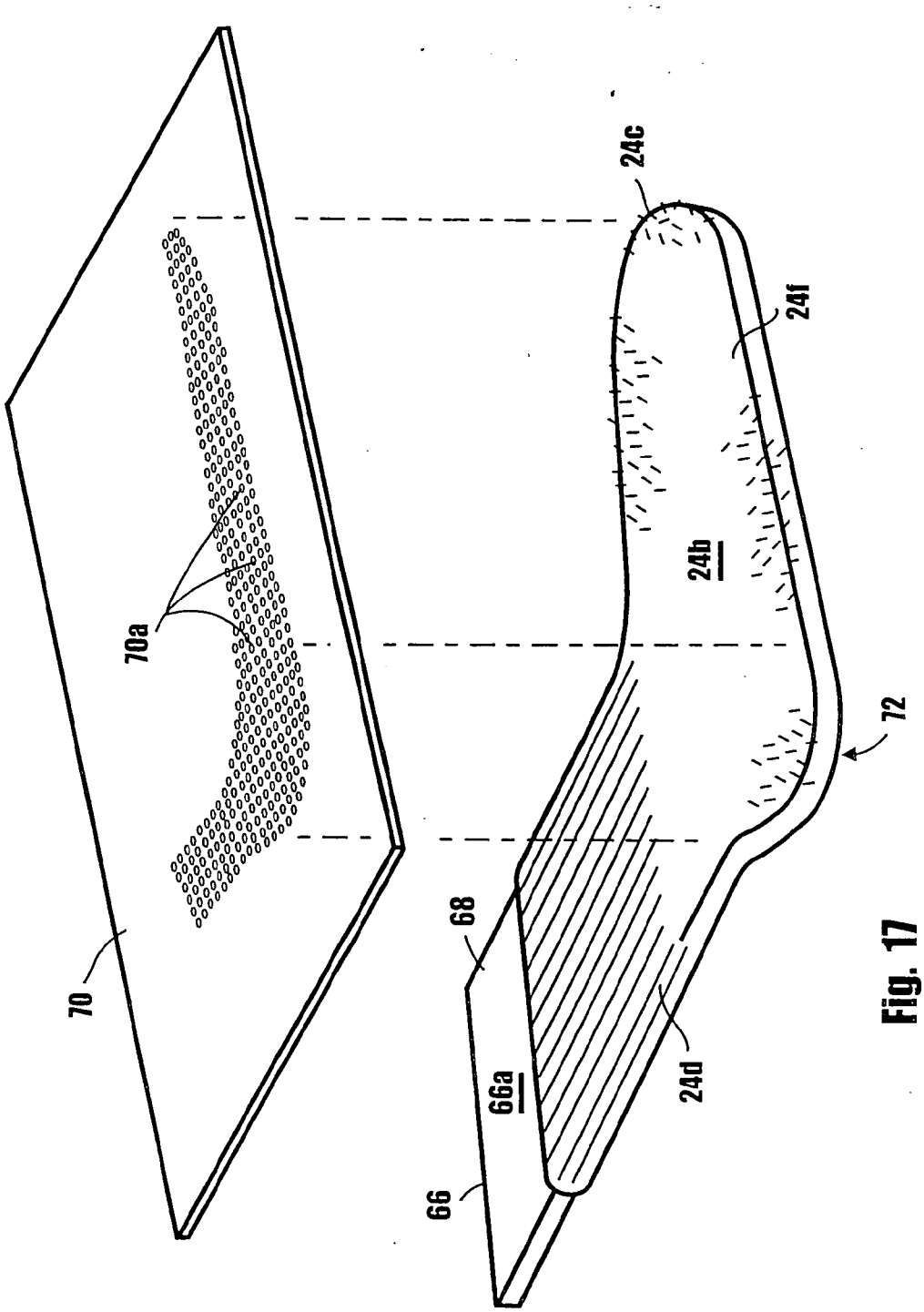

Fig. 17

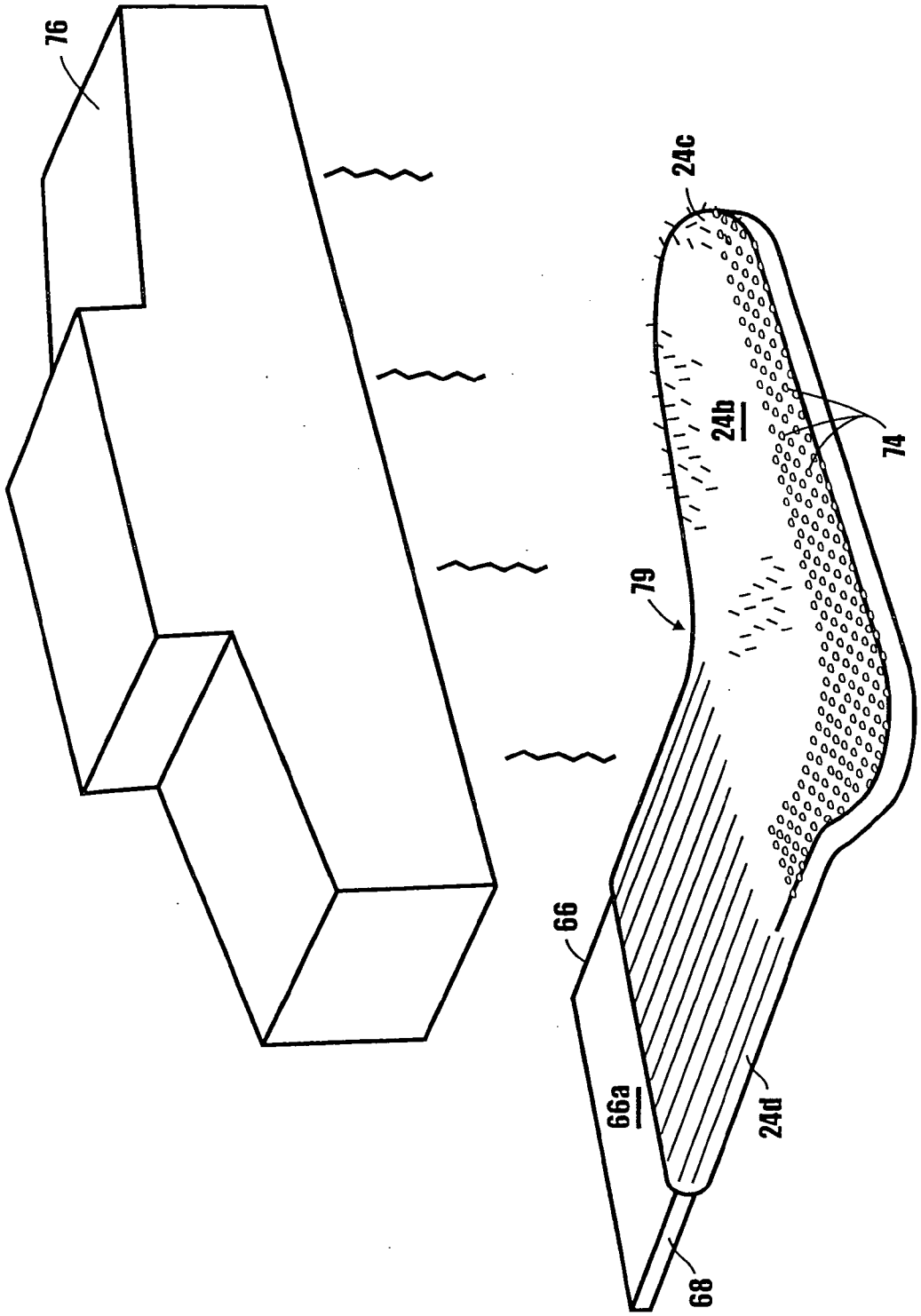

Fig. 18

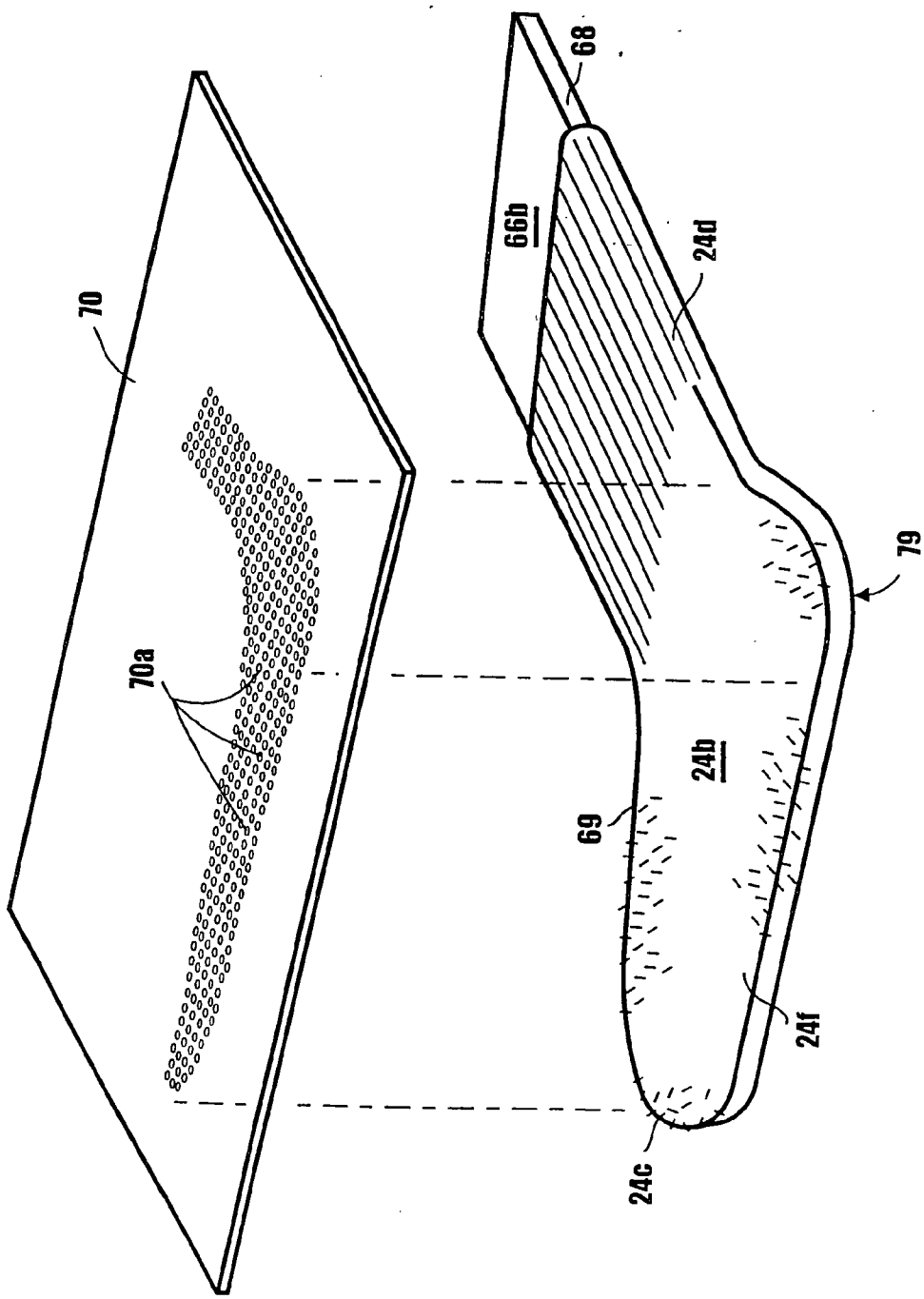

Fig. 19

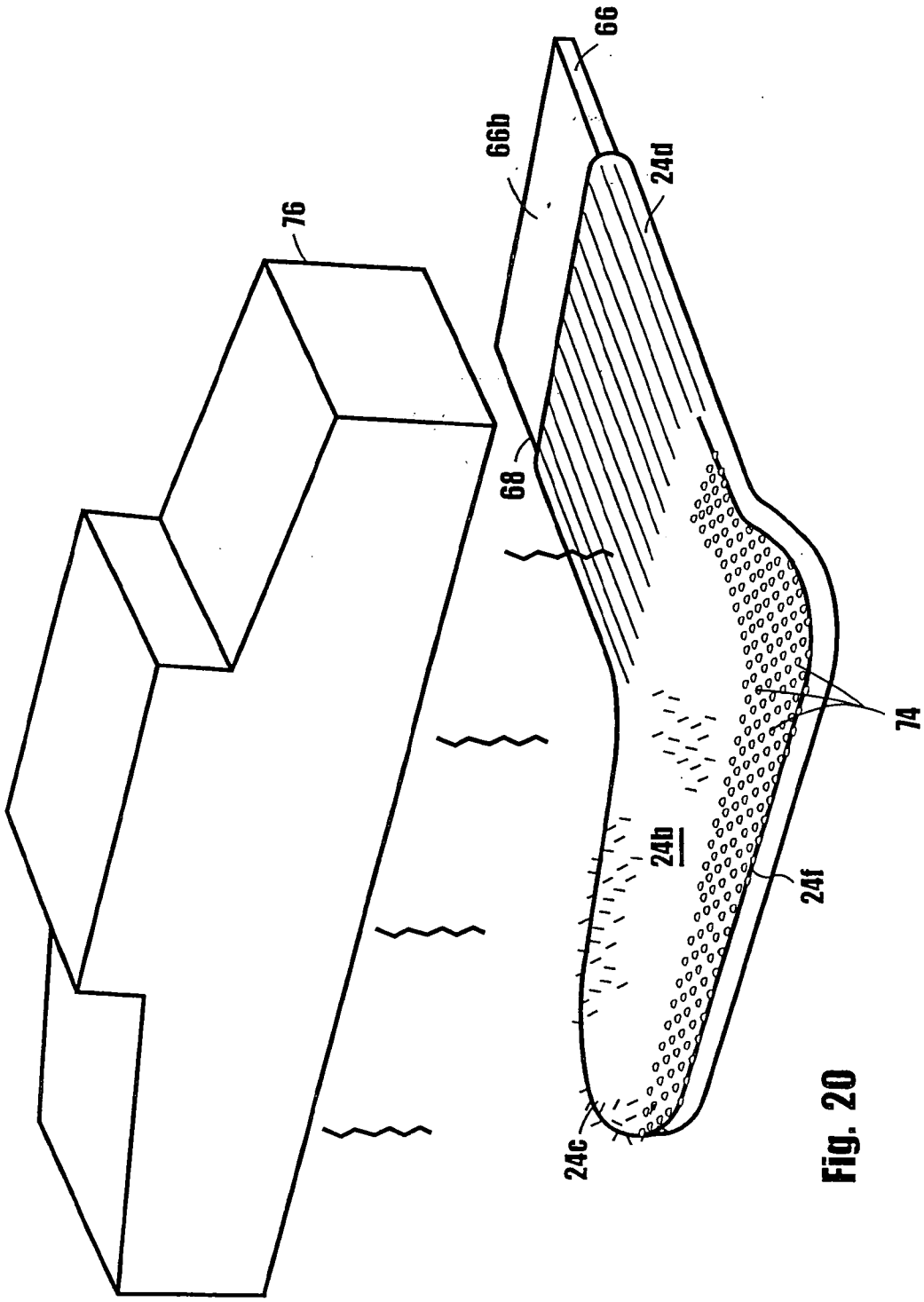

Fig. 20

SOCK WITH GRIPPING DOTS AND A METHOD OF MAKING SAME

[0001] This is a Divisional Application of co-pending U.S. Ser. No. 11/187,088 filed Jul. 22, 2005.

BACKGROUND OF THE INVENTION

[0002] 1. Field of the Invention

[0003] The present invention relates generally to socks and methods for making same. More particularly, the invention concerns an improved gripping sock having a friction-gripping surface consisting of a multiplicity of closely positioned gripping dots provided on the interior surface of the foot portion of the sock.

[0004] 2. Discussion of the Prior Art

[0005] A variety of different types of socks have been produced in the past from various materials, including natural and synthetic yarns. Styles of prior art socks include dress socks, socks for casual wear, athletic socks and special-purpose socks for special activities.

[0006] As a general rule, socks are made by knitting using circular knitting machines. Such machines typically knit a tubular fabric structure using a multiplicity of closely controlled latch needles and sinkers on a length of yarn. One form of prior art circular knitting machine is commercially available from the Lonati Company, S.P.A. of Brescia, Italy. In this machine the knitting action and stitch density is controlled by a program of instructions installed in a microprocessor.

[0007] Prior art socks are generally knitted with a rim surrounding an opening at the leg portion and an opening at the toe portion. The toe opening of a machine knit sock is typically closed in a separate operation performed on one of several different types of commercially available automatic sewing machines.

[0008] The interaction between the sock and the wearer's foot can have a profound impact on the comfort and well-being of the user. For example, a wrinkle or a bunching of the stock within the shoe will, over time, likely cause friction and skin shear which, in turn, can cause blisters, ulcers or other debilitating conditions. This result can be particularly severe with persons having poor circulation, such as persons suffering with diabetes and certain other types of physical disabilities.

[0009] Experience has shown that unless both the sock and the shoe fit nearly perfectly, wrinkling and bunching of the sock within the shoe is generally unavoidable. It is this problem that the present invention seeks to overcome by providing a novel sock and the method of making same that will substantially prevent unwanted wrinkling and bunching of the wearer's sock within the shoe, even during periods of prolonged walking and exercise.

SUMMARY OF THE INVENTION

[0010] It is an object of the present invention to provide a novel sock construction that substantially prevents wrinkling and bunching of the sock within the shoe. More particularly, it is an object of the invention to provide a sock construction which includes a multiplicity of strategically located gripping dots disposed on the interior surface of the sock which effectively resist slippage of the sock relative to the user's foot.

[0011] A further important object of the present invention is to provide a sock of the aforementioned character that effectively prevents slippage of the sock relative to the user's foot without restricting blood flow to the foot and without inhibiting normal blood circulation within the foot.

[0012] Another object of the invention is to provide a novel method for efficiently and cost effectively producing socks of the character described in the preceding paragraphs.

[0013] Another object of the invention is to provide a stretchable sock of the aforementioned character and the method of making the sock wherein the sock is provided with a multiplicity of gripping dots spaced such that the stretch quality of the sock is not restricted by the excessive coverage of the knit fabric by the grip-dots.

[0014] In accordance with these and other objects, the present invention concerns a sock comprising an open top, seamless fabric receptacle that extends downwardly to a closed toe end. The receptacle includes a tapered toe section that projects from the toe end and is configured to receive the toes of the wearer, a tubular generally straight-leg section that is adjacent the leg end and is dimensioned to receive at least a portion of the leg of the wearer, and a tubular, generally straight-foot section extending between the leg section and toe section. The toe, foot and leg sections of the receptacle can be knitted of a common, high-stretch yarn and are preferably configured to cause the yarn to stretch when the sock is donned. In one embodiment of the invention, the yarn comprises multiple core spun strands, each of which includes an elastomeric core and an outer sheath of substantially non-elastic fibers. This construction provides a highly stretchable, form-fitting sock that is free of seams.

BRIEF DESCRIPTION OF THE DRAWINGS

[0015] FIG. **1** is a generally perspective view of a sock of the character used in connection with the method of the present invention showing the exterior surface thereof.

[0016] FIG. **2** is a generally perspective view of the sock shown in FIG. **1** but turned inside out to show the interior surface thereof.

[0017] FIG. **3** is a generally perspective view of one form of the sock support mandrel used in connection with the performance of one embodiment of the method of the invention.

[0018] FIG. **4** is an enlarged fragmentary view of the area designated in FIG. **3** as **4-4**.

[0019] FIG. **5** is a generally perspective view showing the inside out sock of FIG. **2** positioned over the support mandrel shown in FIG. **3** of the drawings.

[0020] FIG. **6** is an enlarged fragmentary view of the area designated in FIG. **5** as **6-6**.

[0021] FIG. **7** is a generally perspective diagrammatic view illustrating the first step in one form of the method of the invention, namely using an apertured stencil for depositing polymer grip-dots on the interior surface of the sock.

[0022] FIG. **8** is a generally perspective diagrammatic view illustrating the second step in one form of the method of the invention, namely using curing means superimposed over the sock for curing the polymer grip-dots emplaced on the interior surface of the starting sock of the invention.

[0023] FIG. **9** is a generally perspective view showing the sock illustrated in FIG. **2** as it appears after being turned inside out and after the grip-dots have been deposited on the interior surface of the sock and cured with the curing means of the invention.

[0024] FIG. **10** is a generally perspective diagrammatic view illustrating the positioning of the starting sock shown in

FIG. **2** of the drawings, in position to be emplaced over the support mandrel of an alternate form of the apparatus of the invention.

[0025] FIG. **11** is a generally perspective diagrammatic view illustrating the starting sock positioned over the support mandrel and showing an alternate form of the stencil member positioned over the surface of the sock upon which grip-dots are to be deposited.

[0026] FIG. **12** is a generally perspective, diagrammatic view illustrating an alternate form of curing means of the invention positioned over the polymer emulsion grip-dots that have been emplaced on the inside surface of the starting sock.

[0027] FIG. **13** is a generally perspective view of the inside surface of the sock as it appears following the step of curing the polymer emulsion of the grip-dots.

[0028] FIG. **14** is a view of the finished sock of this latest form of the invention, partly broken away to illustrate the positioning of the grip-dots on the inside surface of the lower portion of the sock.

[0029] FIG. **15** is a generally diagrammatic side view illustrating the starting sock shown in FIG. **2** positioned over a support mandrel of still a different configuration.

[0030] FIG. **16** is an enlarged cross-sectional view taken along line **16-16** of FIG. **15**.

[0031] FIG. **17** is a generally perspective diagrammatic view illustrating the positioning of an alternate form of template of the apparatus of the invention positioned over the surface of the starting sock upon which the grip-dots are to be deposited.

[0032] FIG. **18** is a generally perspective diagrammatic view showing the curing means of this latest form of the apparatus of the invention positioned over the grip-dots that have been deposited on the first side of the starting sock.

[0033] FIG. **19** is a generally perspective diagrammatic view, similar to FIG. **17**, but showing the sock and mandrel sub-assembly turned over so that grip-dots can be deposited on the opposite side of the starting sock.

[0034] FIG. **20** is a view similar to FIG. **18**, but showing the curing means of the apparatus of the invention positioned over the second side of the starting sock upon which the polymer emulsion grip-dots have been deposited.

DESCRIPTION OF THE INVENTION

[0035] Referring to the drawings and particularly to FIGS. **1** through **9**, one form of the method and apparatus of the invention is there illustrated. FIG. **1** depicts a sock **24** of the character used in connection with the method of the present invention showing the exterior surface **24***a* thereof. FIG. **2** is a generally perspective view of the sock shown in FIG. **1**, but turned inside out to show the interior surface **24***b* thereof.

[0036] Sock **24** comprises an open top, seamless fabric enclosure that extends downwardly to a closed toe end. The enclosure includes a tapered toe section **24***c* that projects from the toe end and is configured to receive the toes of the wearer, a tubular generally straight-leg section **24***d* that is adjacent the leg end and is dimensioned to receive at least a portion of the leg of the wearer and a tubular, generally straight-foot section **24***e* extending between the leg section and toe section. The foot section includes a lower portion **24***f* having an inner surface that engages the bottom portions of the user's foot. The toe, foot and leg sections of the enclosure are preferably knitted of a yarn that will permit stretching when the sock is donned.

[0037] FIG. **3** is a generally perspective view of one form of a sock support mandrel **26** used in connection with the performance of the first form of the method of the invention. As indicated in FIG. **3**, mandrel **26** which comprises a portion of the apparatus of one form of the invention, includes an elongated, generally planar aluminum support member **28** having first and second ends **28***a* and **28***b*. Formed intermediate ends **28***a* and **28***b* is a sock supporting planar portion **29** and a strategically shaped aperture **30** which defines a generally "V"-shaped sock capture element **32**, the purpose of which will presently be described. Mandrel end **28***a* is preferably tapered, while mandrel end **28***b* comprises a segment **34** of reduced width.

[0038] In the performance of one form of the method of the invention, the turned inside-out starting sock shown in FIG. **2** is stretched over the mandrel in the manner shown in FIGS. **5** and **6** with the capture element **32** in gripping engagement with a capture area on the leg receiving portion of the sock. With this construction, the turned inside-out starting sock is securely held in position over the mandrel with the lower or sole portion **24***f* of the foot receiving part of the starting sock being flattened and urged against the generally planar support portion **29** of the mandrel. When the starting sock is properly positioned over the mandrel in the manner shown in FIG. **5** of the drawings to form a first assemblage, the foot engaging portion of the first or interior surface **24***b* is exposed and is maintained in a substantially planar configuration.

[0039] Turning next to FIG. **7** of the drawings, a generally perspective, diagrammatic view illustrating the emulsion deposition step of one form of the method of the invention is there shown. This step involves the use of a specially designed, apertured stencil **38** which also forms a part of the apparatus of the invention. Apertured stencil **38** which includes a central portion having a multiplicity of spaced-apart dot forming apertures **38***a*, functions to permit the uniform deposition of a selected grip-dot forming emulsion on the foot engaging portion of the interior surface **24***b* of the sock. The grip-dot forming emulsion can be selected from a number of well known prior art curable emulsions including polymer emulsions, polyvinyl chloride emulsions and the like.

[0040] In the performance of the emulsion deposition step, the apertured stencil **38** is positioned above the first assemblage **40** in the manner shown in FIG. **7**. Then, using a squeegee or the like (not shown), the selected emulsion, such as a liquid vinyl material, is forced through the apertures **38***a* in a manner such that a multiplicity of spaced-apart, uncured grip-dots **42** are controllably deposited on the foot engaging portion of the interior surface **24***b* of the sock to form an uncured first precursor (see FIG. **8**). This done, the uncured grip-dots **42** are then controllably cured into yieldably deformable cured grip-dots **42***a*.

[0041] This curing step is accomplished using a curing means for curing the emulsion, such as the radiation emitting device **44** shown in FIG. **8** of the drawings. Device **44** functions to controllably cure the uncured grip-dots so as to form a first cured precursor. The radiation means can comprise either an irradiation device, such as the device **44** that produces infrared heat or depending on the formulation of the emulsion used to form the uncured grip-dots, it can comprise an irradiation device that produces ultraviolet light. When certain emulsions are used, the radiation means can also comprise a conventional heating means for controllably heating the uncured grip-dots. Radiation means appropriate for

use in carrying out the method of the present invention are well known to those skilled in the art and are readily commercially available. It is to be understood that in practice the uncured first precursor could be positioned on a conveyor belt and passed beneath the radiation means in a manner to cure the uncured grip-dots **42**.

[0042] Following the curing step, the first cured precursor thus formed is removed from the mandrel by disengaging the sock from the generally "V"-shaped gripping element and sliding the cured precursor over the end of the mandrel **26**. As depicted in FIG. **9** of the drawings, the first precursor uniquely includes a multiplicity of gripping dots **42***a* which are strategically located on the lower foot portion of the sock which is normally in engagement with the foot of the user when the sock is turned inside out and donned by the user. As previously mentioned, after the sock is donned by the user, the strategically located gripping dots **42***a* function to effectively prevent slippage of the sock, relative to the user's foot, thereby avoiding blisters and uncomfortable bunching of the sock within the user's shoe.

[0043] Turning now to FIG. **10**, an alternate form of three-dimensional sock support mandrel **50** is there shown for use in connection with the performance of a second, alternate form of the method of the invention. As indicated in FIG. **10**, mandrel **50**, which comprises a part of the apparatus of one form of the invention, includes a generally cylindrical portion **52** for receiving the tubular, generally straight-leg section **24***d* of the starting sock and a base portion **54** connected to the generally cylindrical portion. Base portion **54** includes a sock supporting, generally planar portion **56** for supporting lower portion **24***f* of the starting sock.

[0044] In the performance of the alternate form of the method of the invention, the turned inside-out starting sock shown in FIG. **2** is stretched over the mandrel **50** in the manner shown in FIGS. **11** and **12**. With this construction, the turned inside-out starting sock is securely held in position over the mandrel with the lower or sole portion **24***f* of the foot receiving part of the starting sock being flattened and urged against the generally planar support portion **56** of the mandrel. When the starting sock is properly positioned over the mandrel in the manner shown in FIG. **11** of the drawings to form a first assemblage, the foot engaging portion of the first or interior surface **24***b* of the sock is exposed and is maintained in a substantially planar configuration.

[0045] Turning to FIG. **11** of the drawings, a generally perspective diagrammatic view illustrating the emulsion deposition step of this alternate form of the method of the invention is there shown. This step involves the use of a specially designed, apertured stencil **58** which also forms a part of the apparatus of the invention. Apertured stencil **58** which includes a central portion having a multiplicity of spaced-apart dot forming apertures **58***a*, functions to permit the uniform deposition of a selected grip-dot-forming emulsion on the foot engaging portion of the interior surface **24***b* of the sock. As before, the grip-dot forming emulsion can be selected from a number of well known prior art curable emulsions including polymer emulsions, polyvinyl chloride emulsions and the like.

[0046] In the performance of the emulsion deposition step of this alternate form of the invention, the apertured stencil **58** is positioned above the first assemblage **60** in the manner shown in FIG. **11**. Then, using a squeegee or the like (not shown), the selected emulsion such as a polymer emulsion, is forced through the apertures **58***a* in a manner such that a multiplicity of spaced-apart, uncured grip-dots **62** are controllably deposited on the foot engaging portion of the interior surface **24***b* of the sock to form an uncured first precursor (see FIG. **12**). This done, the uncured grip-dots **62** are then controllably cured into yieldably deformable, rubber-like cured grip-dots **62***a*. This curing step is accomplished in the manner previously described using a curing means for curing the emulsion, such as the radiation emitting device **44** shown in FIG. **12** of the drawings, to cure the uncured grip-dots in a manner to form a first cured precursor **63**.

[0047] Following the curing step, the first cured precursor thus formed is removed from the mandrel **50**. As depicted in FIG. **13** of the drawings, the first precursor **63** uniquely includes a multiplicity of gripping dots **62***a* which are strategically located on the lower foot portion of the sock which is normally in engagement with the foot of the user when the sock is turned inside-out in the manner shown in FIG. **14** and subsequently donned by the user. After the sock is donned by the user the strategically located gripping dots **62***a* function to effectively prevent slippage of the sock relative to the user's foot.

[0048] Referring now to FIGS. **15** and **16**, still another form of sock support mandrel **66** is there shown for use in connection with the performance of a third, alternate form of the method of the invention. As indicated in the drawings, mandrel **66** which also comprises a part of the apparatus of the invention, comprises a substantially rigid, aluminum mandrel **66** which has the general shape of a human foot but is somewhat larger than the size of a normal human foot. Mandrel **66** has a first, generally planar surface **66***a* and a second, spaced-apart generally planar, opposing surface **66***b*. Mandrel **66** here includes an upper portion **68** for receiving the tubular, generally straight-leg section **24***d* of the starting sock and a lower portion for receiving and supporting the lower portion **24***f* of the starting sock.

[0049] In the performance of the alternate form of the method of the invention, the turned inside-out starting sock shown in FIG. **2** is stretched over the mandrel **66** in the manner shown in FIGS. **15** and **16**. With this construction, the turned inside-out starting sock is securely held in position over the mandrel with both sides of the lower or sole portion **24***f* of the foot receiving part of the starting sock flattened and urged against the sides of the generally planar support portion **68** of the mandrel. When the starting sock is properly positioned over the mandrel in the manner shown in FIGS. **15** and **16** of the drawings to form a first assemblage **69**, the foot engaging portion of the first or interior surface **24***b* of the sock is exposed and is maintained in a substantially planar configuration.

[0050] Turning to FIG. **17** of the drawings, a generally perspective diagrammatic view illustrating the emulsion deposition step of this latest form of the method of the invention is there shown. This step involves the use of a specially designed, apertured stencil **70** which also forms a part of the apparatus of the invention. Apertured stencil **70** which includes a central portion having a multiplicity of spaced-apart dot forming apertures **70***a*, functions to permit the uniform deposition of a selected grip-dot-forming emulsion on the foot engaging portion of the interior surface **24***b* of the sock. As before, the grip-dot forming emulsion can be selected from a number of well known prior art curable emulsions including polymer emulsions, polyvinyl chloride emulsions and the like.

[0051] In the performance of the emulsion deposition step of this latest form of the invention, the apertured stencil **70** is positioned above the first assemblage **72** in the manner shown in FIG. **17**. Then, using a squeegee or the like (not shown), the selected emulsion such as a polymer emulsion is forced through the apertures **70***a* in a manner such that a multiplicity of spaced-apart, uncured grip-dots **74** are controllably deposited on one side of the foot engaging portion of the interior surface **24***b* of the sock to form an uncured first precursor (see FIG. **18**). This done, the uncured grip-dots **74** are then controllably cured into yieldably deformable, rubber-like cured grip-dots similar to the previously described grip-dots **62***a* (FIG. **18**). This curing step is accomplished in the manner previously described using a curing means for curing the emulsion, such as the radiation emitting device **76** shown in FIG. **18** of the drawings, to cure the uncured grip-dots and to form a first cured precursor **79**.

[0052] Following this first curing step, assemblage **69** is turned over in the manner depicted in FIG. **19** to expose the second opposite side of the first precursor. This done, the apertured stencil **70** is positioned above the turned over assemblage **79** in the manner shown in FIG. **19**. Then, using a squeegee or the like (not shown), the selected emulsion such as a polymer emulsion, is forced through the apertures **70***a* in a manner such that a multiplicity of spaced-apart, uncured grip-dots **74** are controllably deposited on the second side of the foot engaging portion of the interior surface **24***b* of the sock to form an uncured second precursor (see FIG. **20**). This done, the uncured grip-dots **74** are then controllably cured into yieldably deformable, rubber-like cured grip-dots similar to the previously described grip-dots **62***a* (FIG. **18**). This curing step is accomplished in the manner previously described using a curing means for curing the emulsion such as the radiation emitting device **76** shown in FIG. **20** of the drawings, to cure the uncured grip-dots and to form a second cured precursor.

[0053] Following the second curing step, the second cured precursor thus formed is removed from the mandrel **66**. The second precursor formed by depositing grip-dots on both sides of the interior surface **24***b* of the foot engaging portion of the sock **63** (see FIG. **13**) uniquely includes a multiplicity of gripping dots which are strategically located on the lower foot portion of the sock which is normally in engagement with the foot of the user when the sock is turned inside-out from that shown in FIG. **20** and subsequently donned by the user. After the sock is donned by the user, the strategically located gripping dots once again function to effectively prevent slippage of the sock relative to the user's foot.

[0054] Having now described the invention in detail in accordance with the requirements of the patent statutes, those skilled in this art will have no difficulty in making changes and modifications in the individual parts or their relative assembly in order to meet specific requirements or conditions. Such changes and modifications may be made without departing from the scope and spirit of the invention, as set forth in the following claims.

I claim:

1. A gripping sock having inner and outer surfaces, an open top, a generally tubular-shaped leg section that is dimensioned to receive at least a portion of the leg of the wearer and a foot section connected to said leg section and dimensioned to receive the foot of the wearer, the foot and leg sections being constructed from a yarn and being configured to stretch when the sock is donned, said foot section having a lower portion, including an inner surface having a multiplicity of yieldably deformable grip-dots constructed and arranged to prevent slippage of the sock relative to the wearers foot.

2. The gripping sock as defined in claim **1** in which said yieldably deformable grip-dots comprise a polymer emulsion.

3. The gripping sock as defined in claim **1** in which said yieldably deformable grip-dots comprise a polyvinyl chloride emulsion.

4. The gripping sock as defined in claim **1** in which said yieldably deformable grip-dots comprise a liquid vinyl.

5. The gripping sock as defined in claim **1** in which said yarn comprises natural fibers.

6. The gripping sock as defined in claim **1** in which said yarn comprises synthetic fibers.

7. The gripping sock as defined in claim **1** in which said yarn comprises synthetic fibers which incorporate elastic filaments.

8. An apparatus for making a gripping sock from a sock having a foot receiving portion for engagement with the foot of the user, said apparatus comprising:

(a) a sock supporting mandrel comprising a generally planar support member having first and second ends, a generally planar support portion disposed intermediate said first and second ends and a sock capture element located in intermediate said first and second ends;

(b) a stencil operatively associated with said sock supporting mandrel for use in depositing a multiplicity of dots of a curable emulsion onto said foot receiving portion of said sock; and

(c) curing means for curing said curable emulsion.

9. The apparatus as defined in claim **8** in which said supporting mandrel is provided with an aperture and in which said capture element comprises a generally "V"-shaped sock capture element extending into said aperture.

10. The apparatus as defined in claim **8** in which said supporting mandrel has first and second ends and a generally planar sock supporting planar portion disposed intermediate said first and second ends.

11. The apparatus as defined in claim **8** in which said first end of said supporting mandrel is tapered and in which said second end comprises a segment of reduced width.

12. The apparatus as defined in claim **8** in which said curing means comprises a radiation emitting device.

* * * * *