US00D518957S

(12) United States Design Patent

DeCarlo et al.

(10) Patent No.: US D518,957 S
(45) Date of Patent: ** Apr. 18, 2006

(54) **COLLAPSIBLE STORAGE CONTAINER AND LID**

(75) Inventors: **Anthony J. DeCarlo**, Bay Village, OH (US); **Daniel V. Perella**, Hudson, OH (US); **Vincent J. Thomson**, Avon Lake, OH (US)

(73) Assignee: **Idea Stream Consumer Products, LLC**, Barma, OH (US)

(**) Term: **14 Years**

(21) Appl. No.: **29/201,193**

(22) Filed: **Mar. 11, 2004**

(51) **LOC (8) Cl.** **03-01**

(52) **U.S. Cl.** **D3/302**; D9/432

(58) **Field of Classification Search** D3/272, D3/273, 302, 271.1; D9/432, 433; D19/90; 229/117.01, 117.02, 117.03, 117.04, 117.05, 229/117.07

See application file for complete search history.

(56) **References Cited**

U.S. PATENT DOCUMENTS

3,303,986 A	*	2/1967	Tanaka	229/125.01
D315,098 S	*	3/1991	Hutcheson	D9/414
D323,294 S	*	1/1992	Williams	D9/432
D336,427 S	*	6/1993	Mainiero	D9/423
D339,062 S	*	9/1993	Williams	D9/432
D372,673 S	*	8/1996	Turner	D9/432
D414,335 S	*	9/1999	Cheyn	D3/276
D418,751 S	*	1/2000	Wolf	D9/432
D437,222 S	*	2/2001	Goldberg	D9/432
D457,313 S	*	5/2002	Clark et al.	D3/276

* cited by examiner

Primary Examiner—Philip S. Hyder
(74) *Attorney, Agent, or Firm*—Pillsbury Winthrop Shaw Pittman, LLP

(57) **CLAIM**

The ornamental design for a collapsible storage container and lid, as shown and described.

DESCRIPTION

FIG. **1** is an exploded view of a collapsible storage container and lid showing our new design;
FIG. **2** is a right side elevation view of the collapsible storage container, the left side elevation view mirrors the right side elevation view;
FIG. **3** is a front elevation view thereof, the back elevation view mirrors the front elevation view;
FIG. **4** is a top plan view thereof;
FIG. **5** is a bottom plan view thereof;
FIG. **6** is a top plan view of the collapsible storage container in a collapsed state wherein the front and back portions of the collapsible storage container are folded atop the side portions of the collapsible storage container;
FIG. **7** is a bottom plan view of the collapsible storage container in a collapsed state wherein the side portions are folded beneath the front and back portions of the collapsible storage container;
FIG. **8** is a right side elevation view of the collapsible storage container lid, the left side elevation view is similar to the right side elevation view;
FIG. **9** is a front elevation view thereof, the back elevation view mirrors the front elevation view;
FIG. **10** is a top plan view thereof;
FIG. **11** is a bottom plan view thereof; and,
FIG. **12** is a top plan view of the collapsible storage container lid in a collapsed state, the bottom plan view mirrors the top plan view.

1 Claim, 10 Drawing Sheets

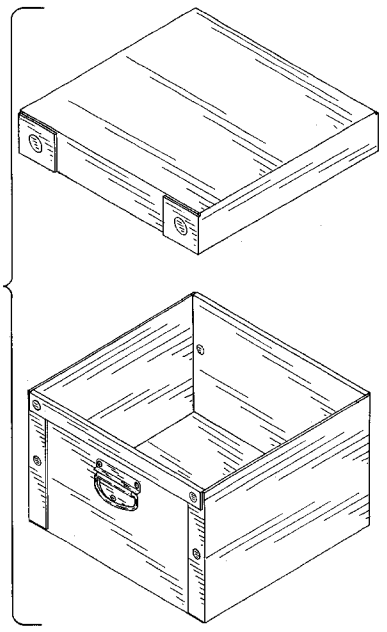

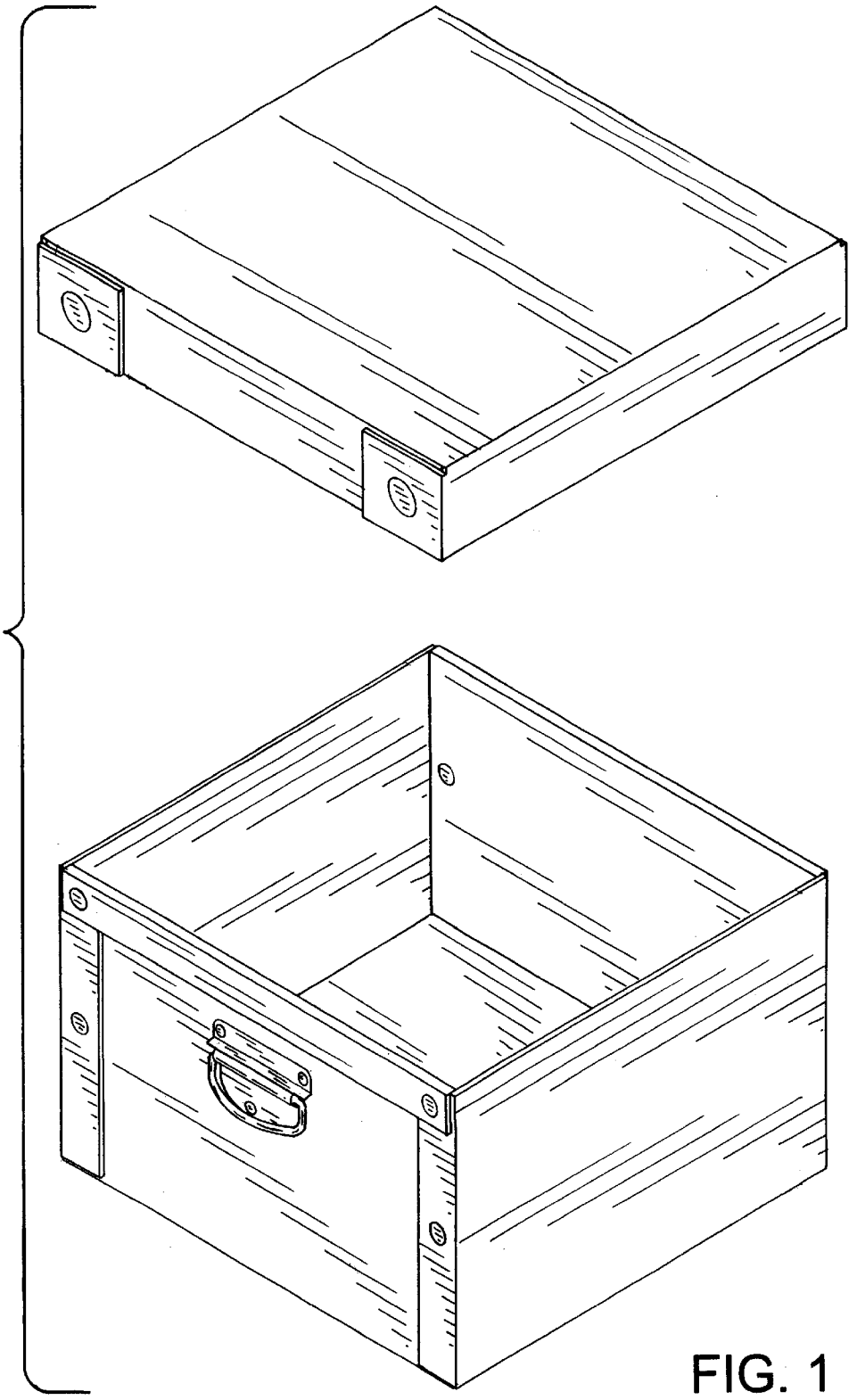

FIG. 1

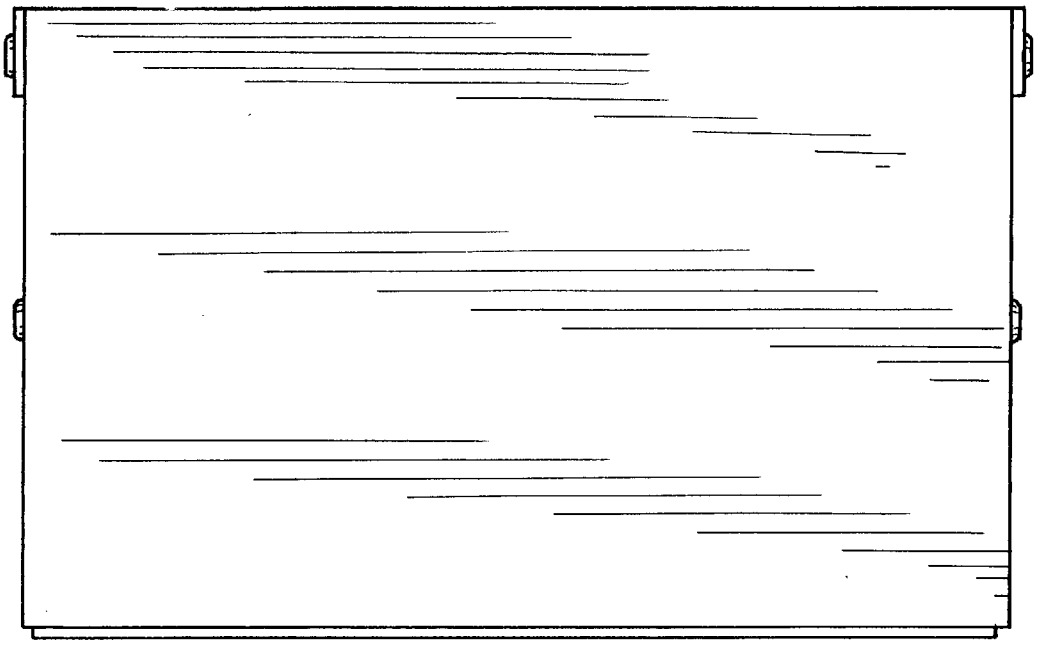

FIG. 2

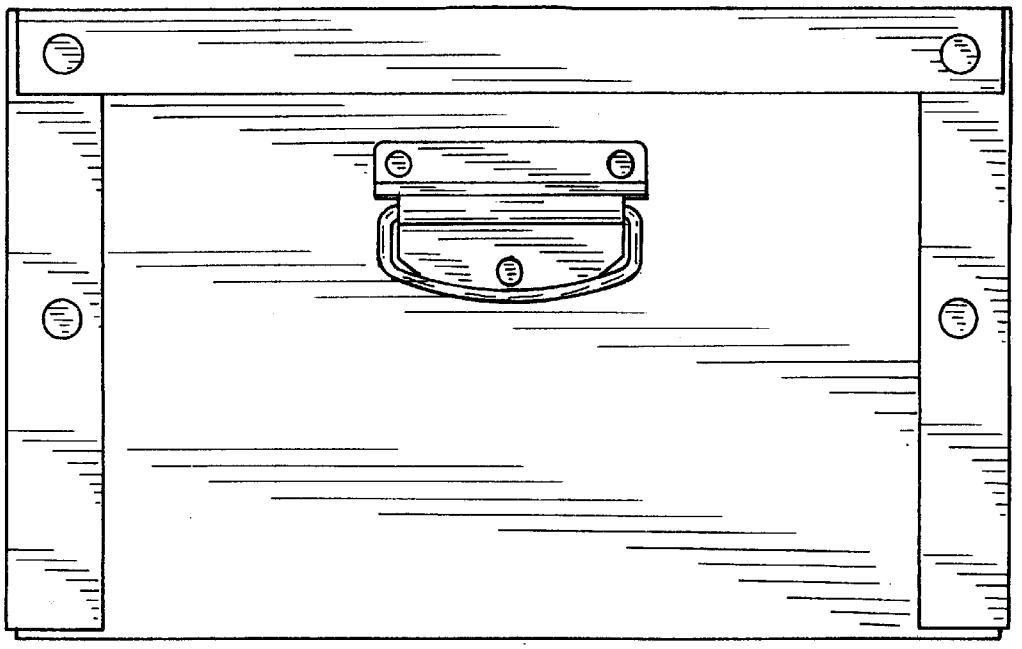

FIG. 3

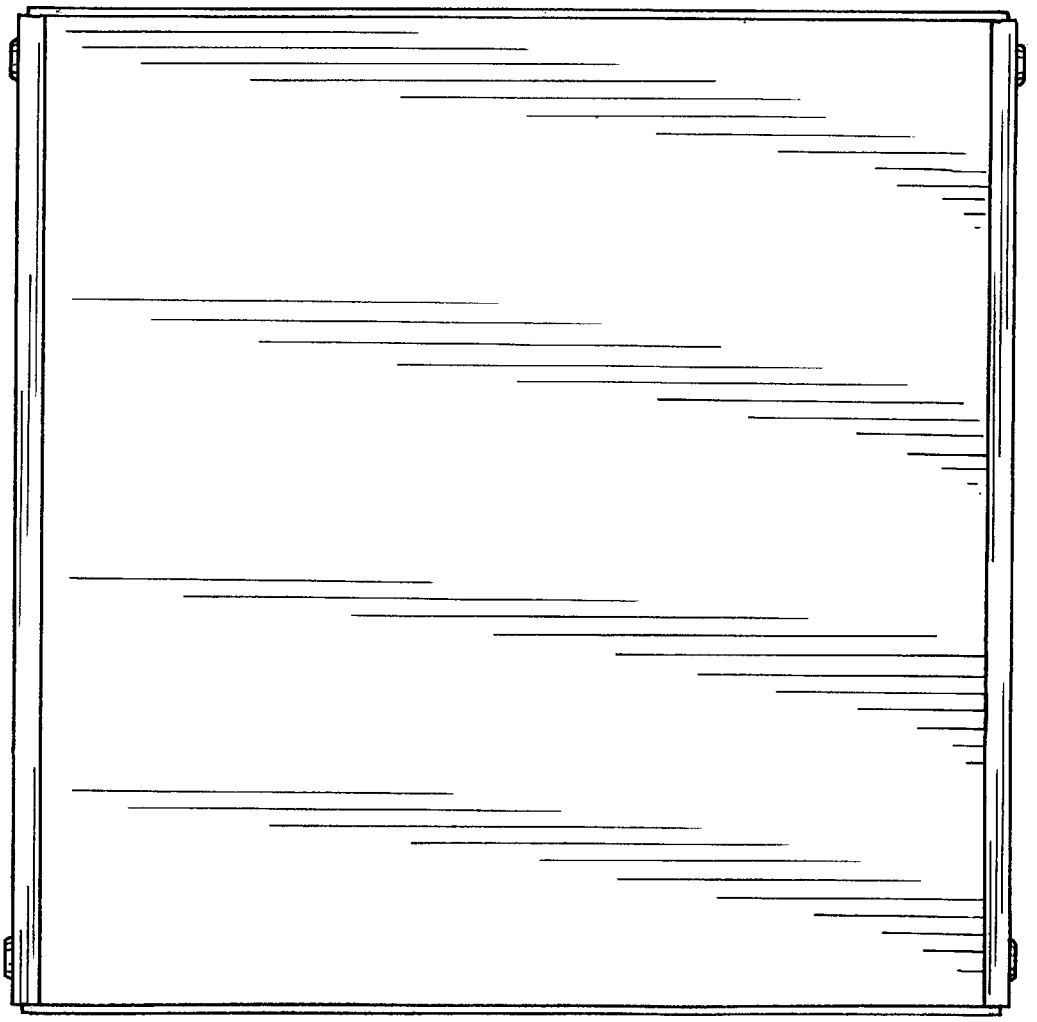

FIG. 4

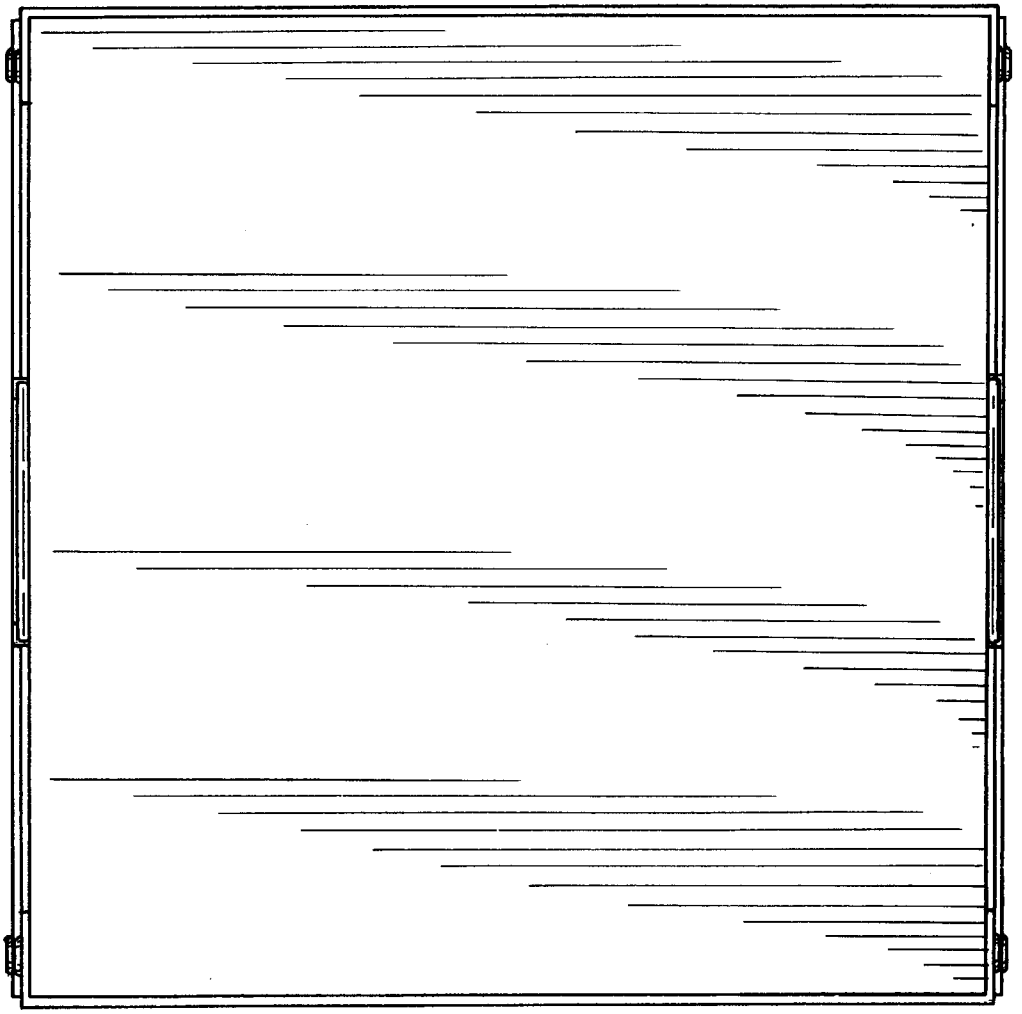

FIG. 5

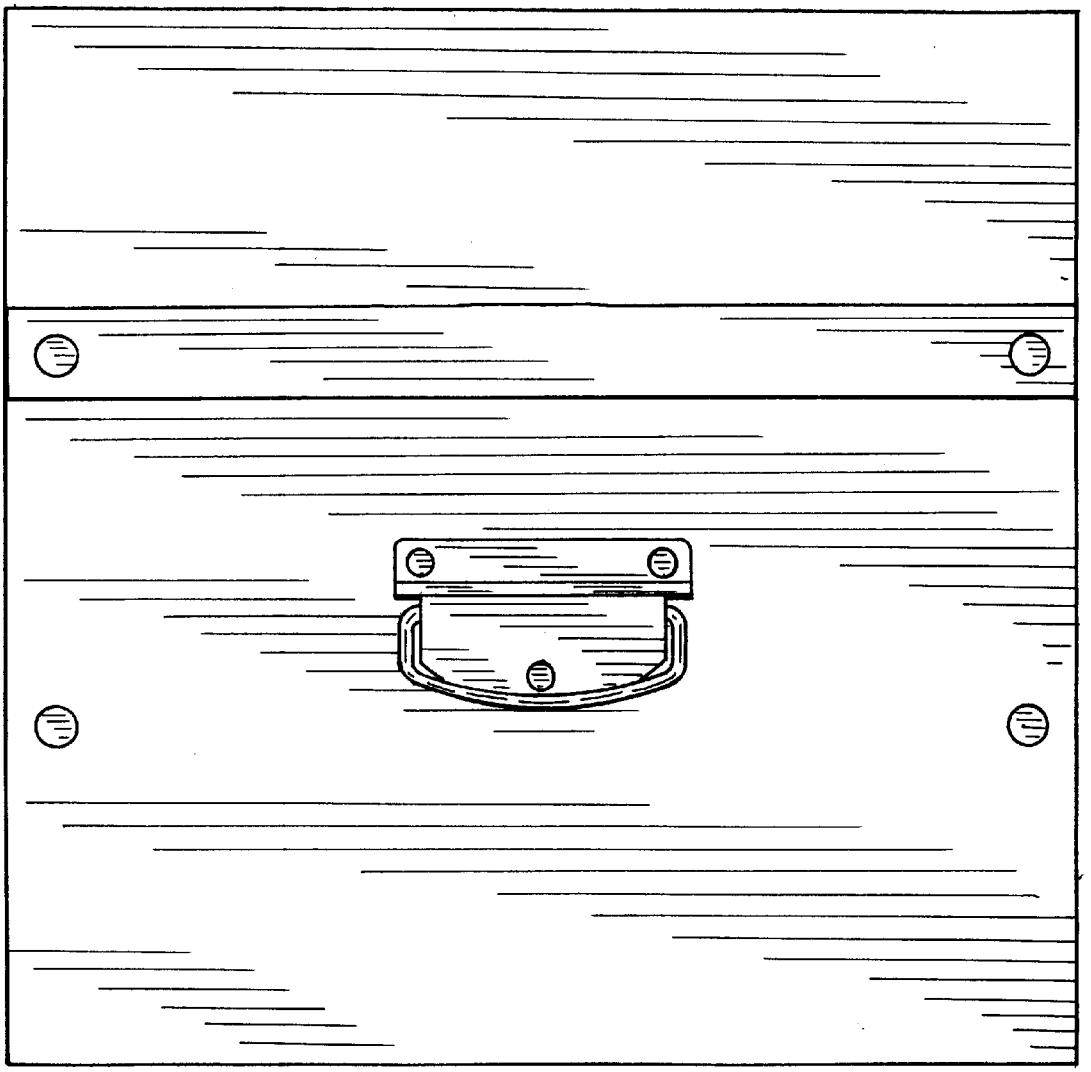

FIG. 6

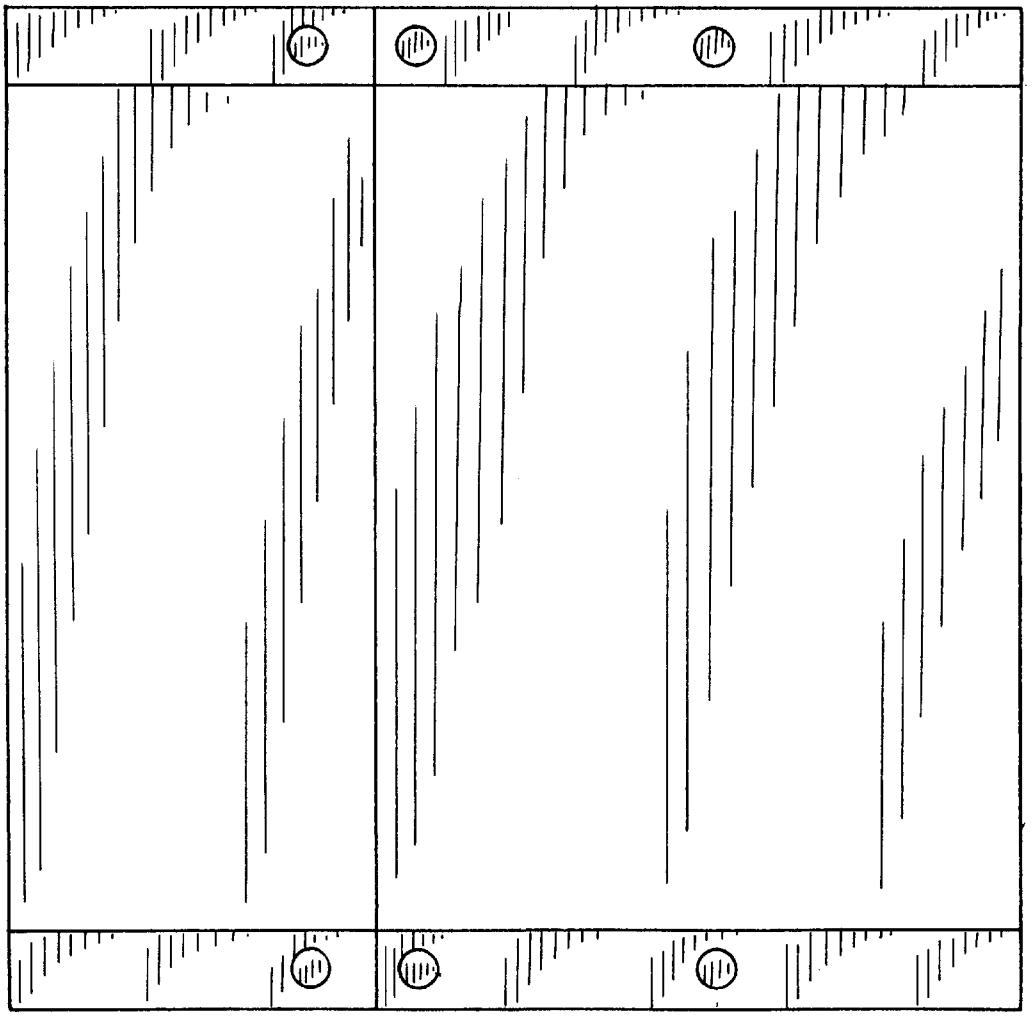

FIG. 7

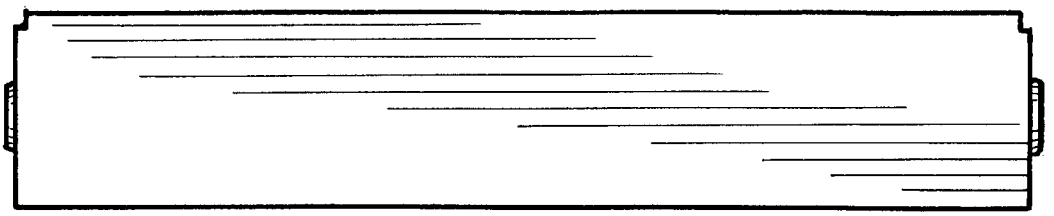

FIG. 8

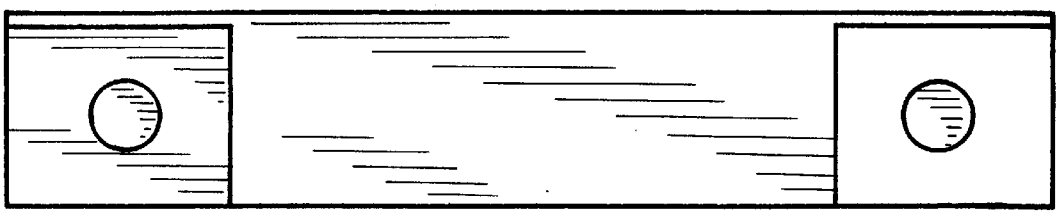

FIG. 9

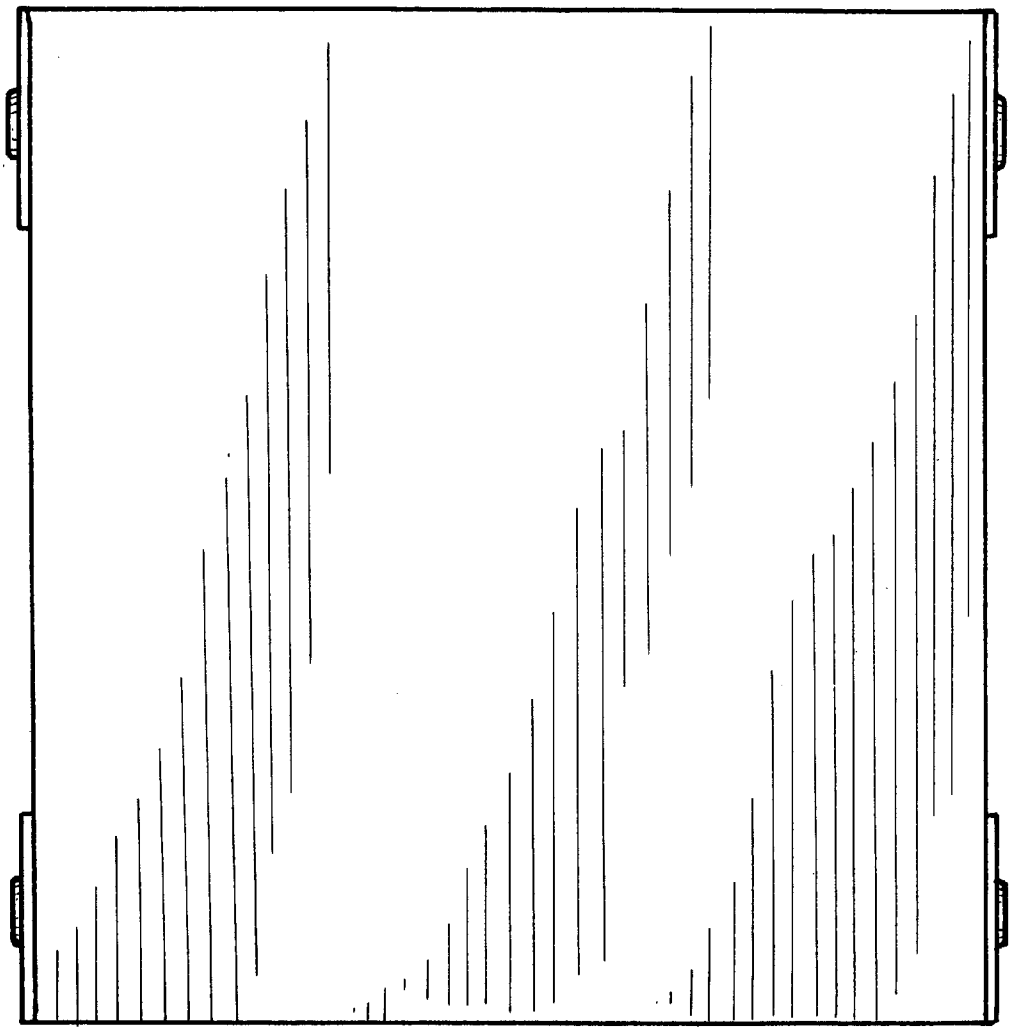

FIG. 10

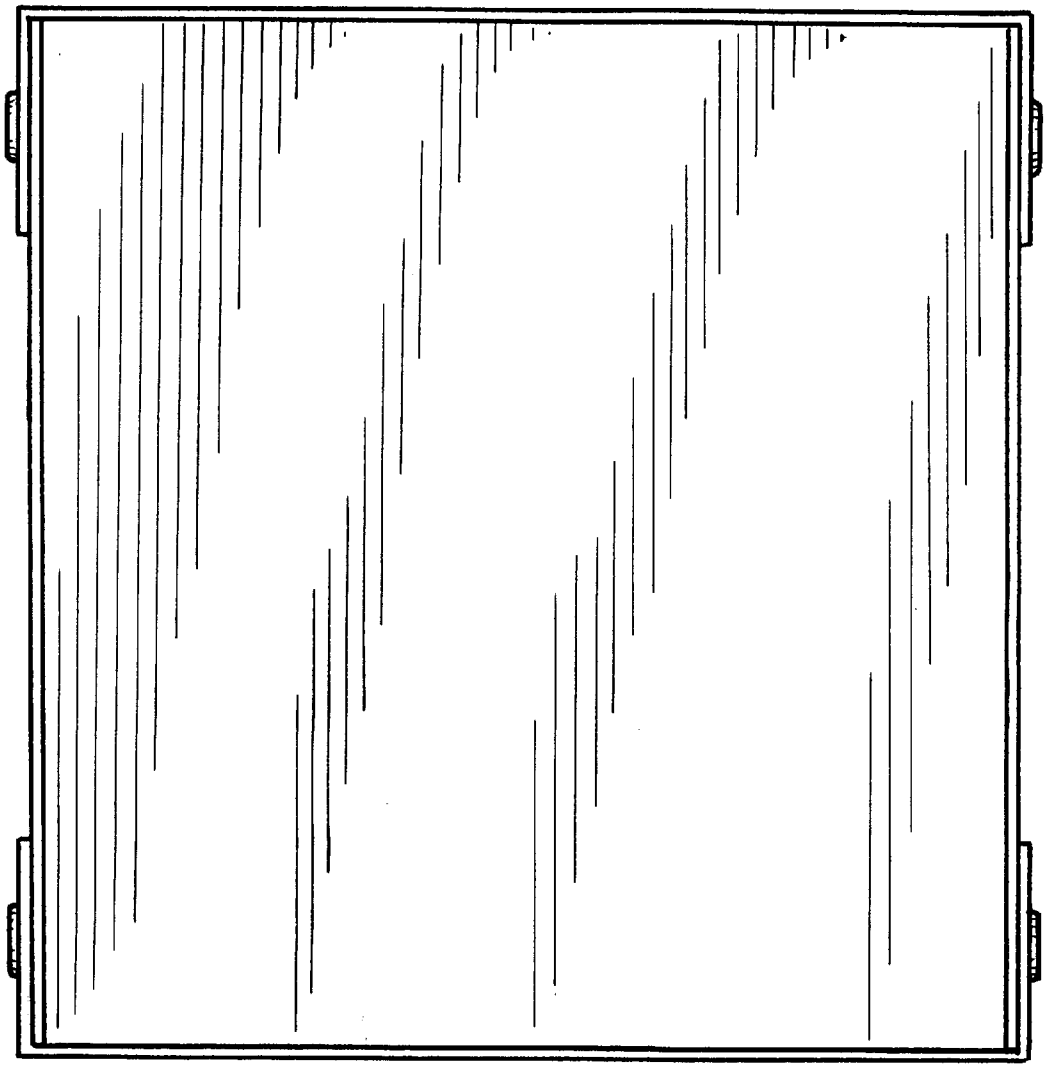

FIG. 11

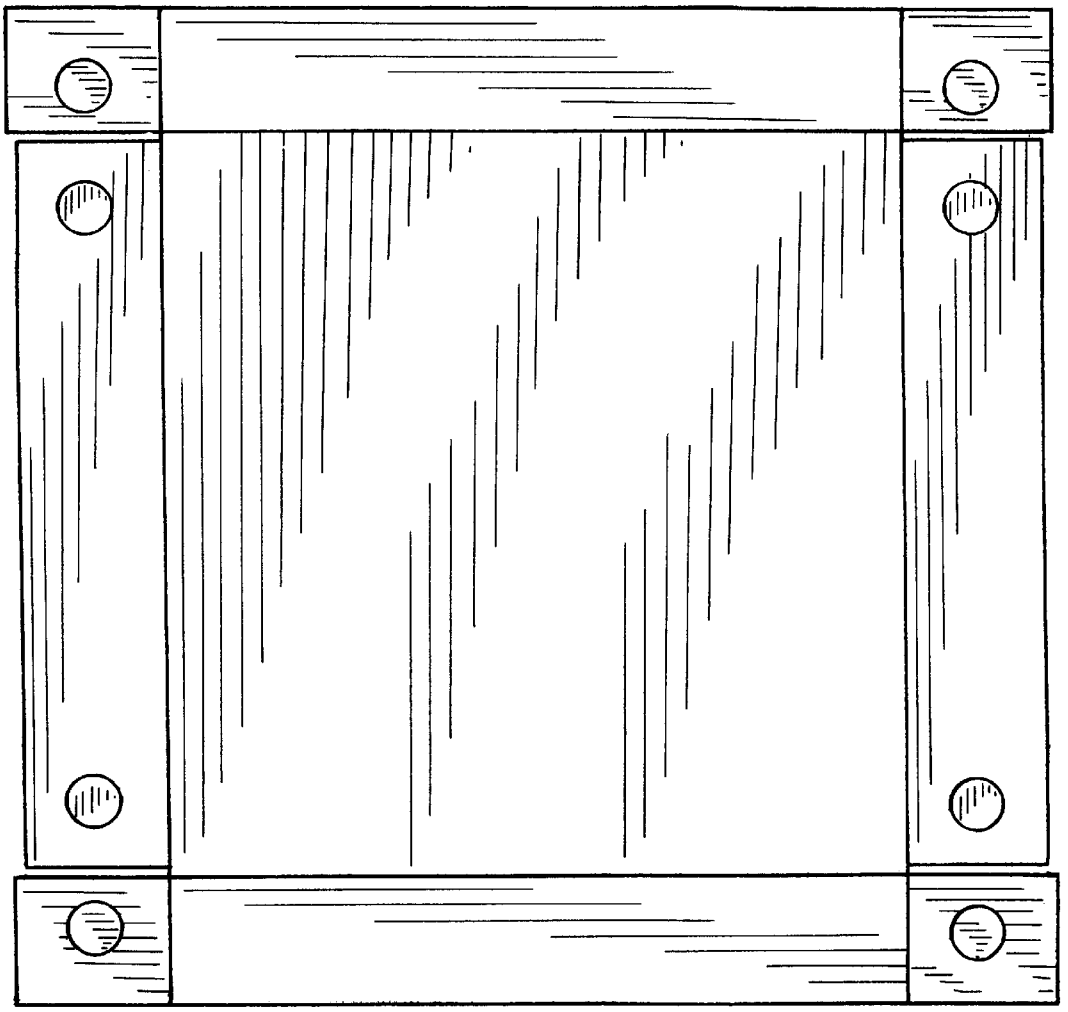

FIG. 12