US 20220079303A1

(19) **United States**

(12) **Patent Application Publication** (10) **Pub. No.: US 2022/0079303 A1**

Bassan et al. (43) **Pub. Date: Mar. 17, 2022**

(54) **EXTENSIBLE JEWELRY ITEMS**

(71) Applicants: **Vittorio B., LLC**, New York, NY (US); **ELLE Atelier s.a.s.**, Valenza (IT)

(72) Inventors: **Vittorio Bassan**, New York, NY (US); **Luca Iapichino**, Valenza (IT)

(21) Appl. No.: **17/021,838**

(22) Filed: **Sep. 15, 2020**

Publication Classification

(51) **Int. Cl.**
A44C 5/08 (2006.01)
A44C 5/02 (2006.01)

(52) **U.S. Cl.**
CPC ***A44C 5/08*** (2013.01); ***A44C 5/022*** (2013.01)

(57) **ABSTRACT**

An extensible jewelry item includes an annular element formed by a plurality of links and an internal titanium or stainless steel spring is mounted to extend each link. Each link has on each side an external female element and an internal male element. The female elements are micro-slots in the extended sections of each links. The male elements are internal micro-posts that extend through the female's slots to restrict the movement of the female elements of the link adjacent thereto away from each other. The micro-size of posts and slots enables the mechanism to be applied to links as small as 2.0 mm×2.0 mm×2.0 mm; therefore, also ideal for fine jewelry rings. In the elliptical version of the extensible jewelry item, the adjacent surfaces of each link are designed with individual specific taper angles; thus, when assembled, the links form an elliptical shape. In the elliptical shape, each link is numbered, and is placed in specific position. In the round version of the extensible jewelry item, the taper angles of the adjacent surfaces are all the same; therefore, the links are not numbered and is not relevant where they'll be placed.

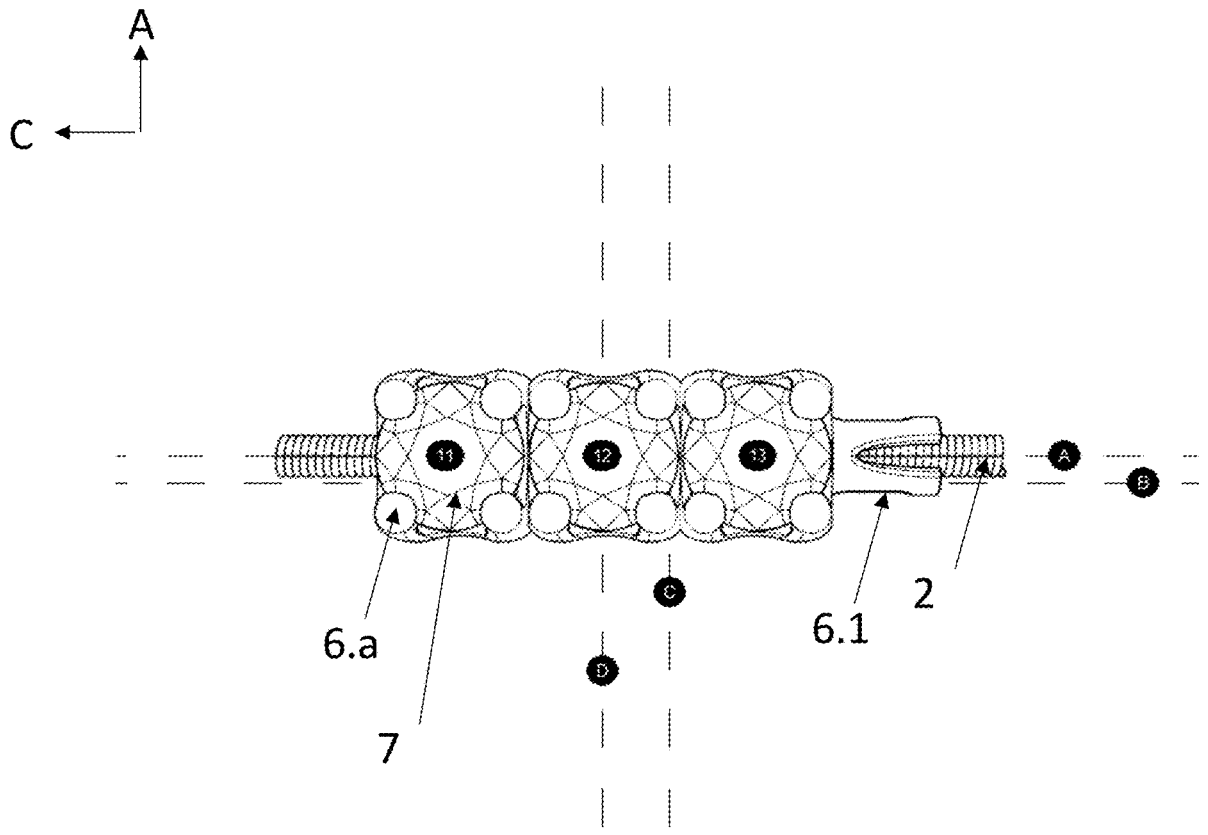

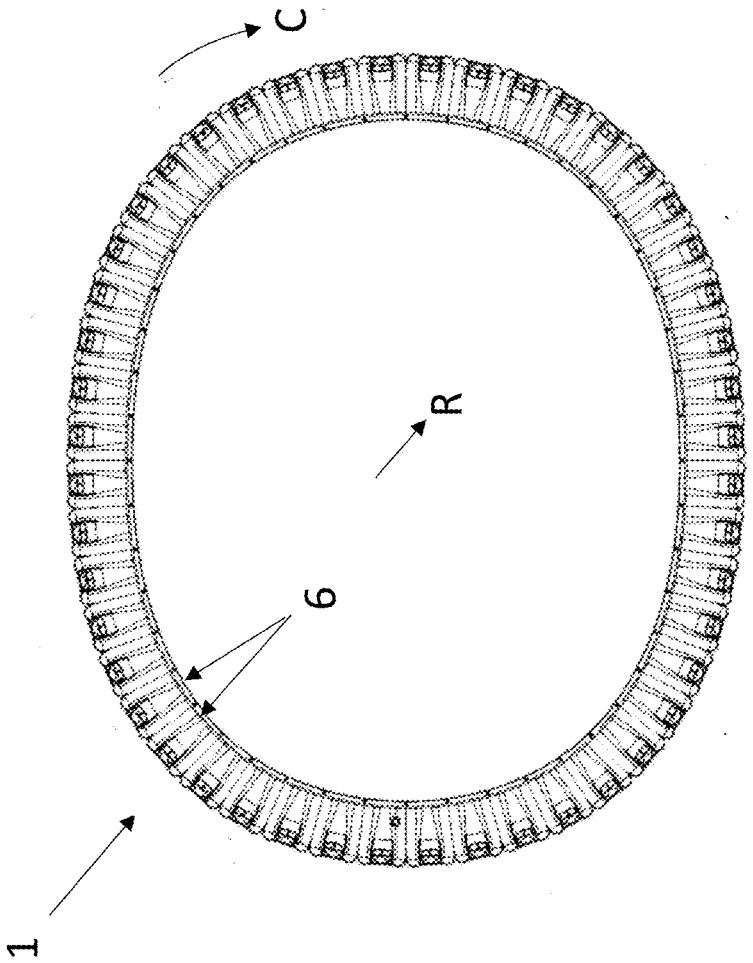

FIG. 1

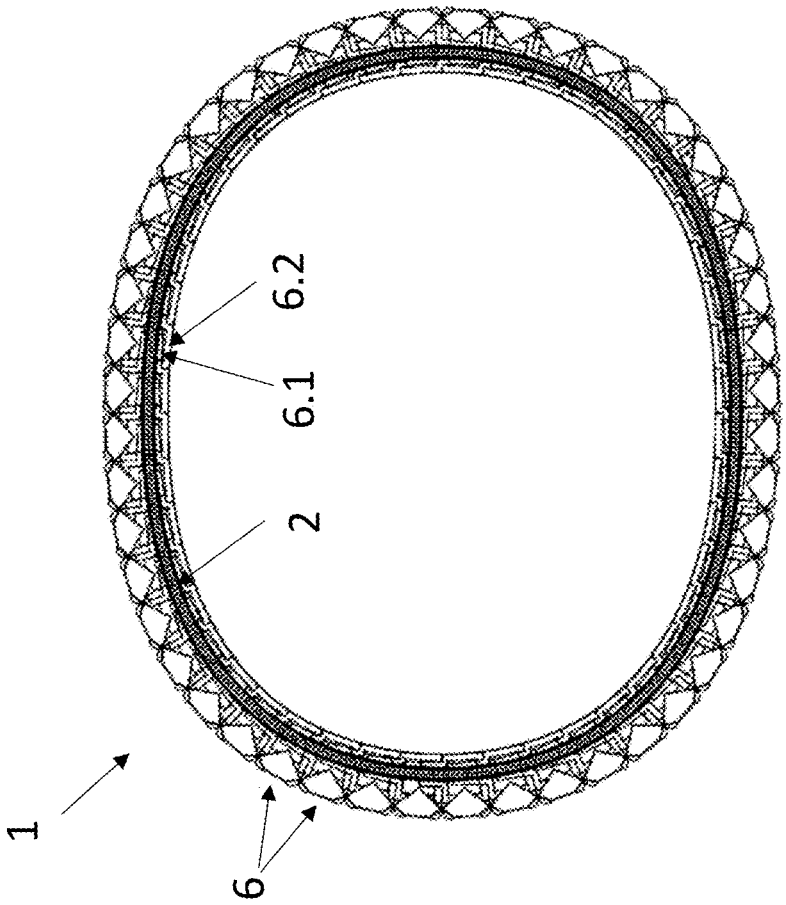

FIG. 2

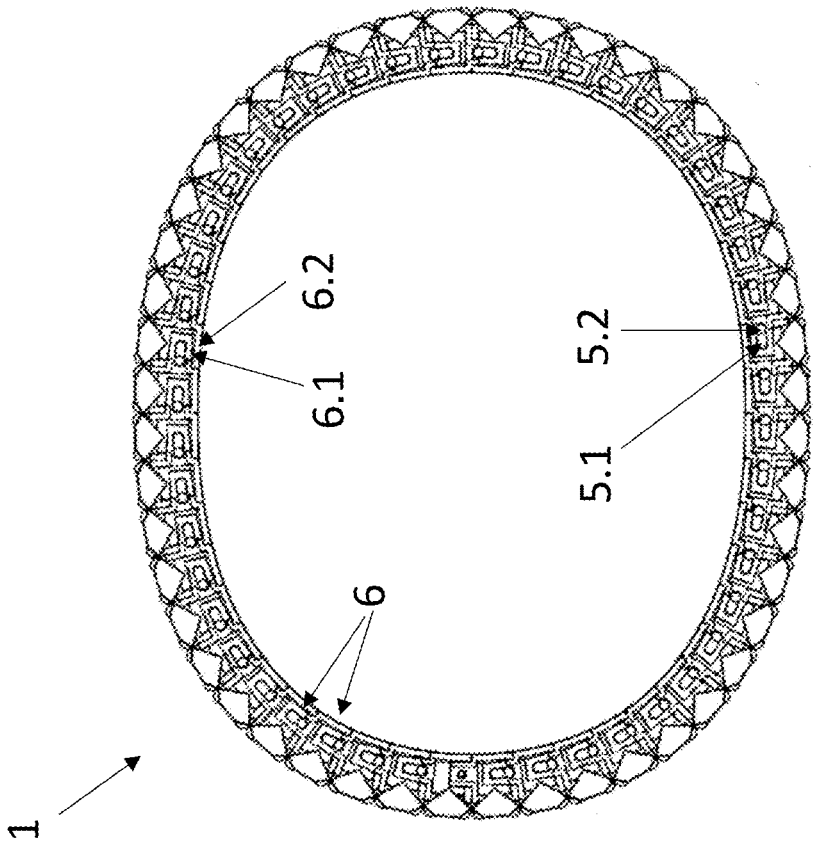

FIG. 3

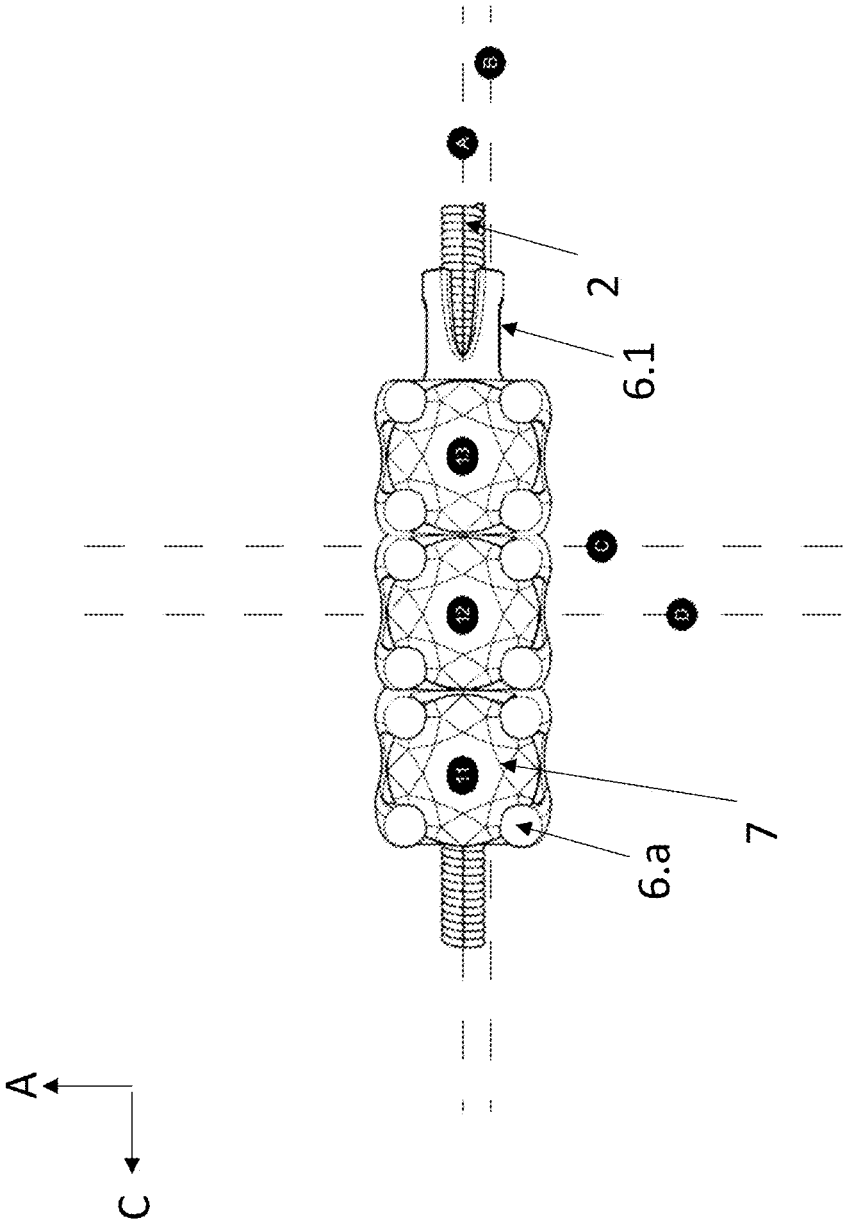

FIG. 4

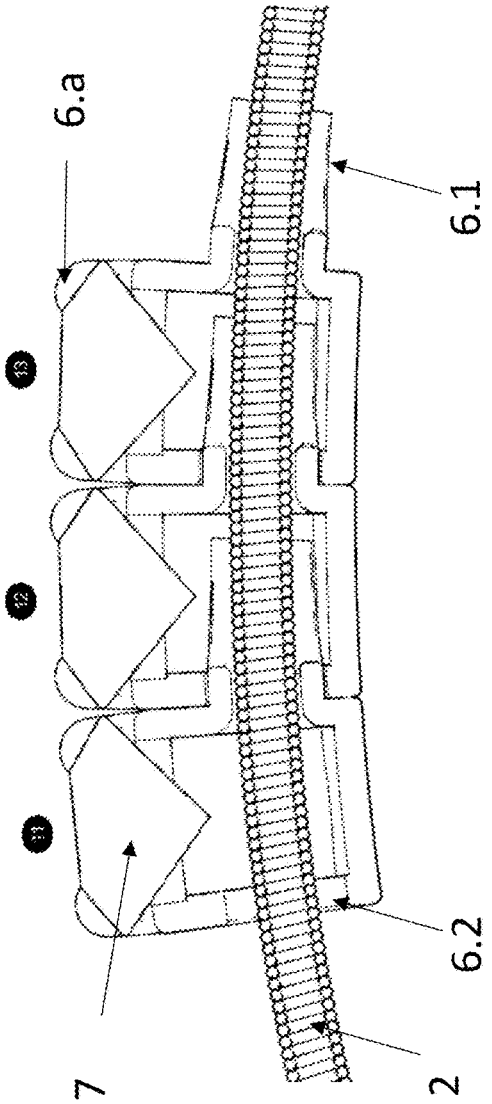

FIG. 5

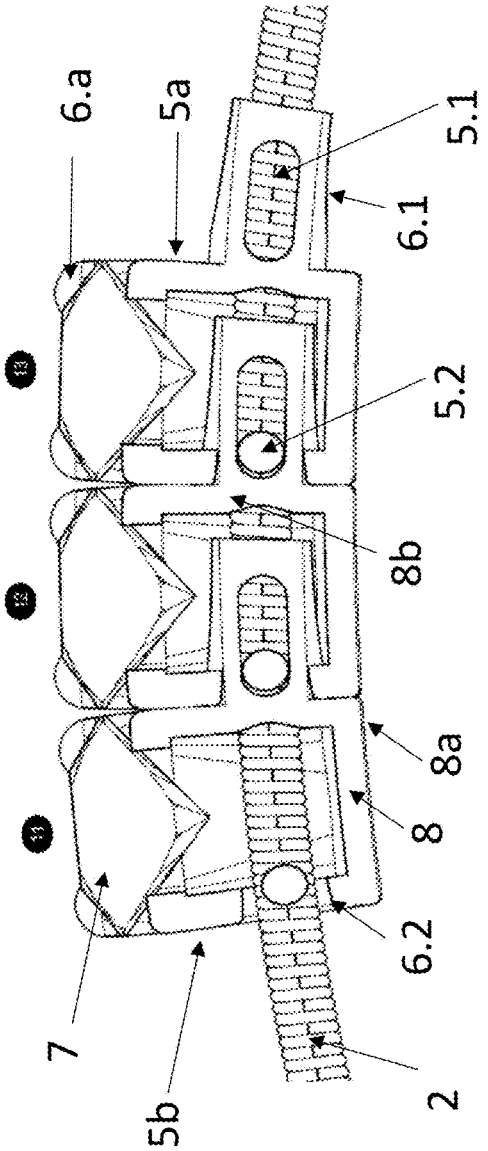

FIG. 6

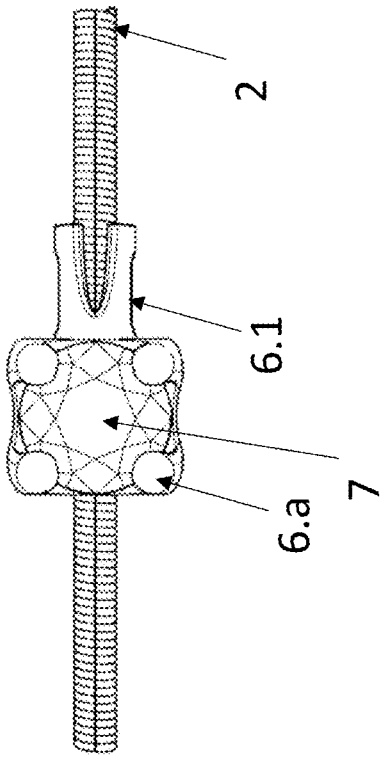

FIG. 7

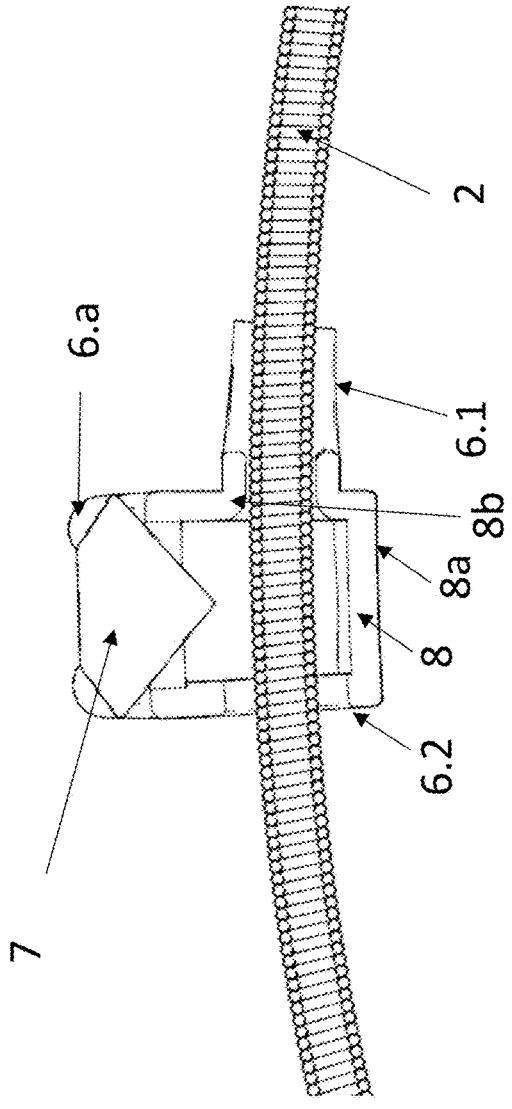

FIG. 8

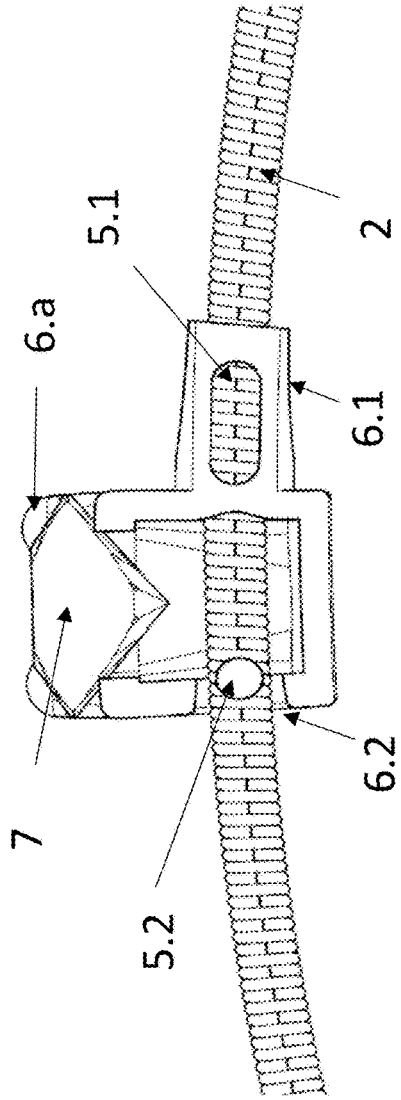

FIG. 9

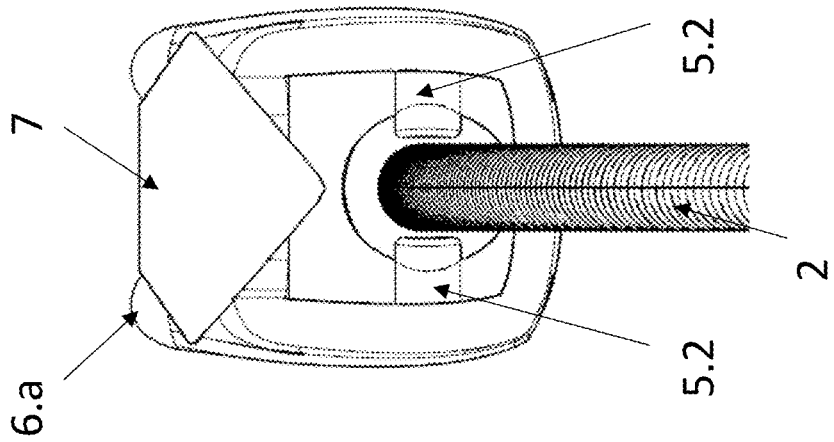

FIG. 12

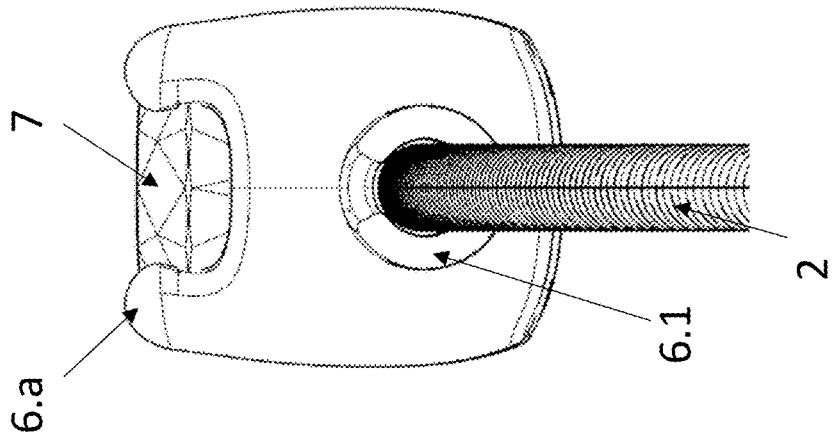

FIG. 11

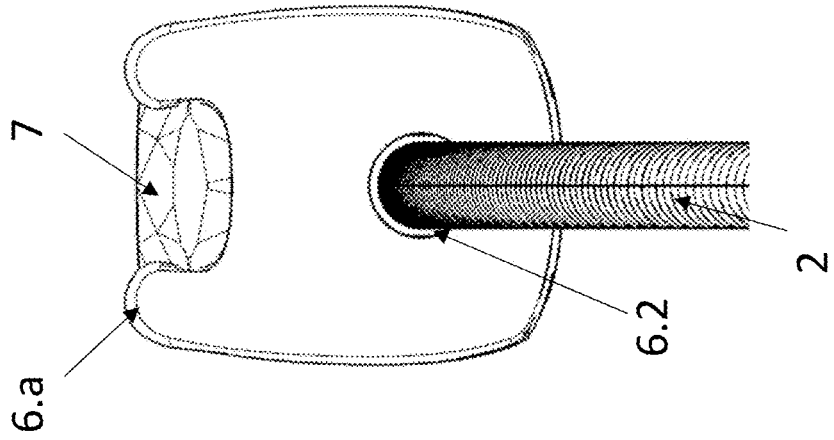

FIG. 10

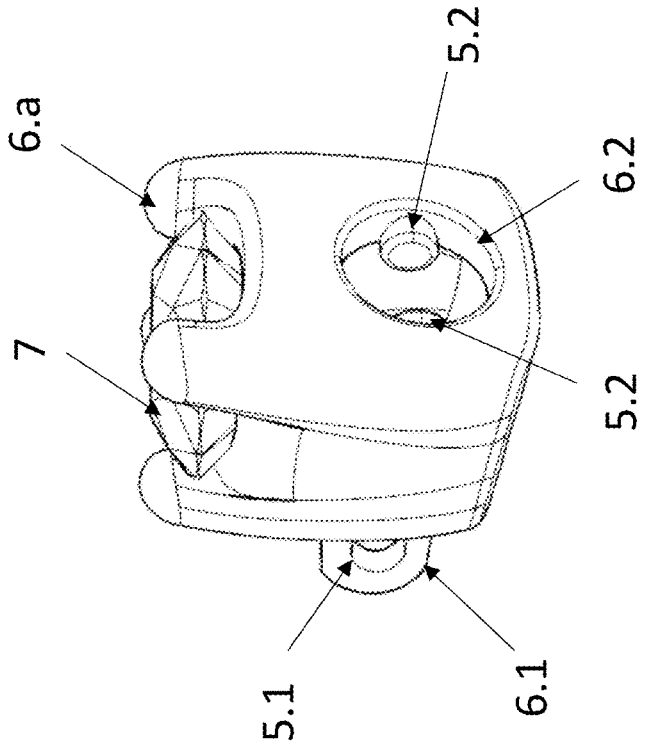

FIG. 14

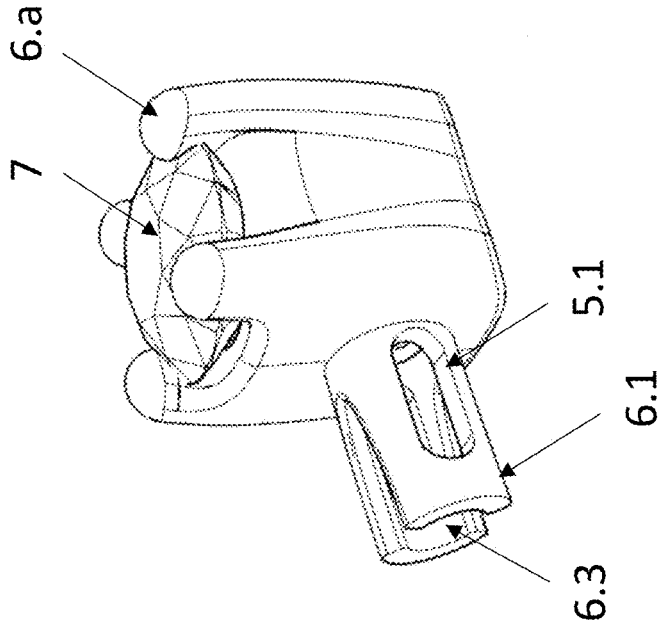

FIG. 13

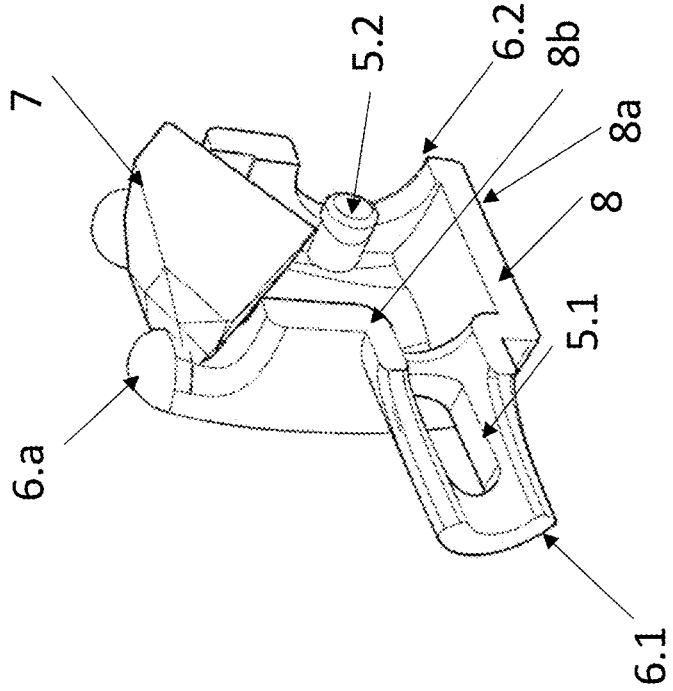

FIG. 16

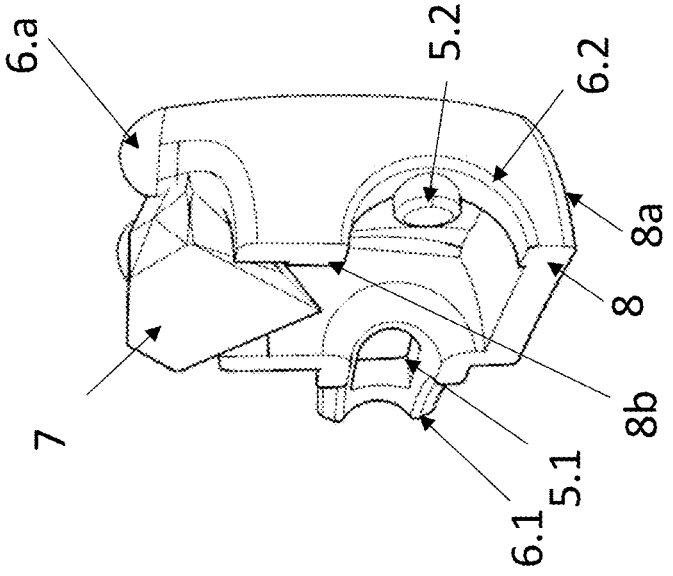

FIG. 15

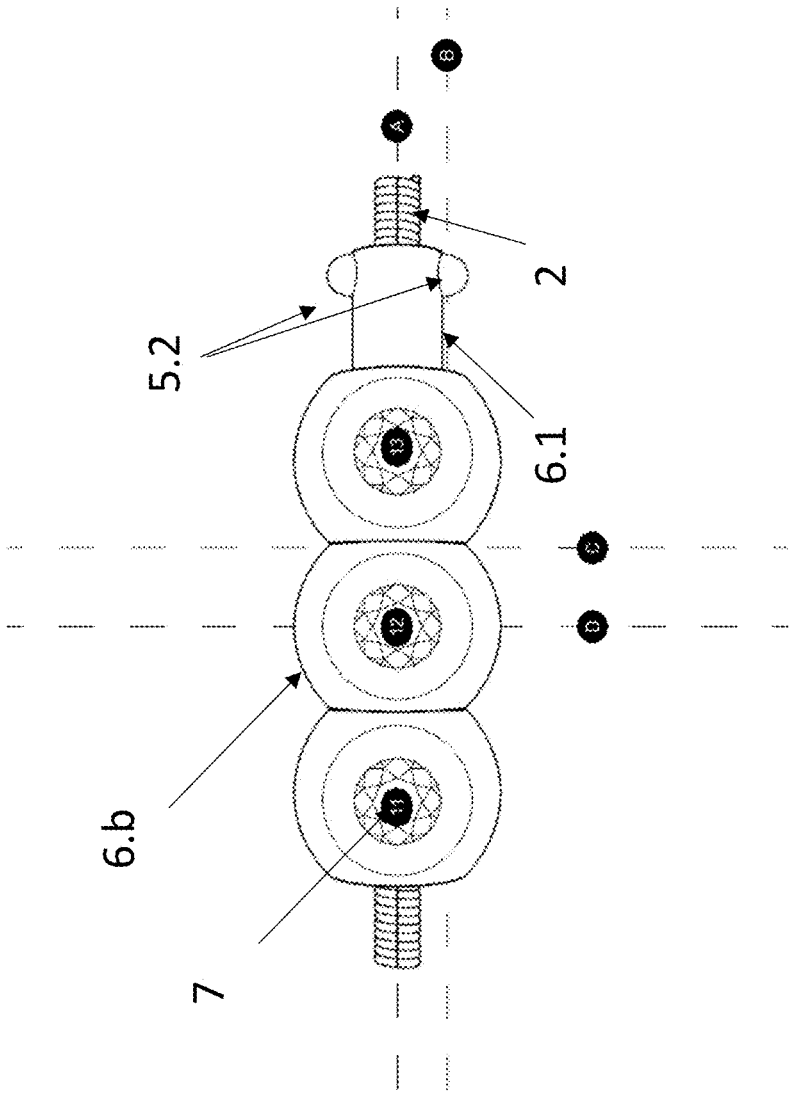

FIG. 17

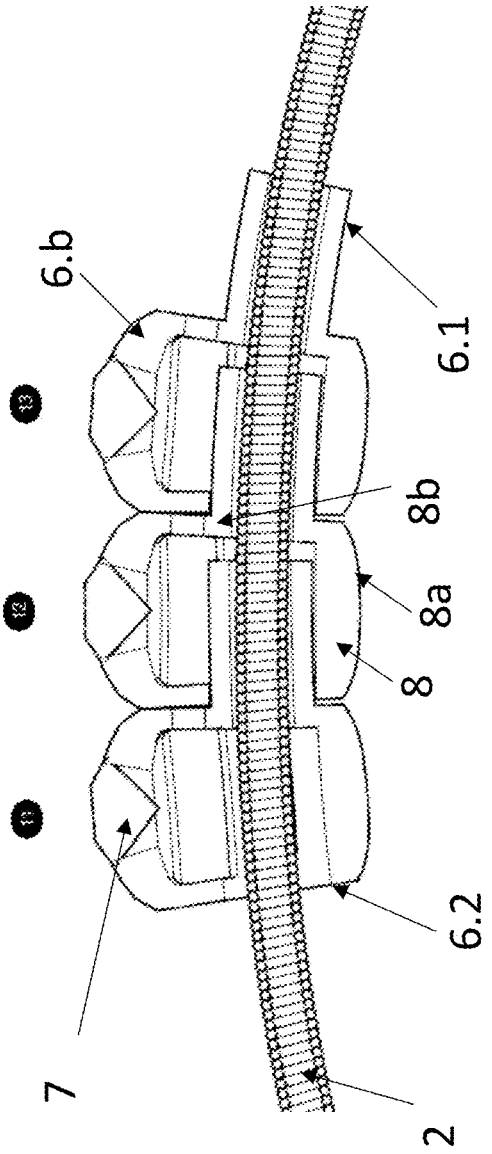

FIG. 18

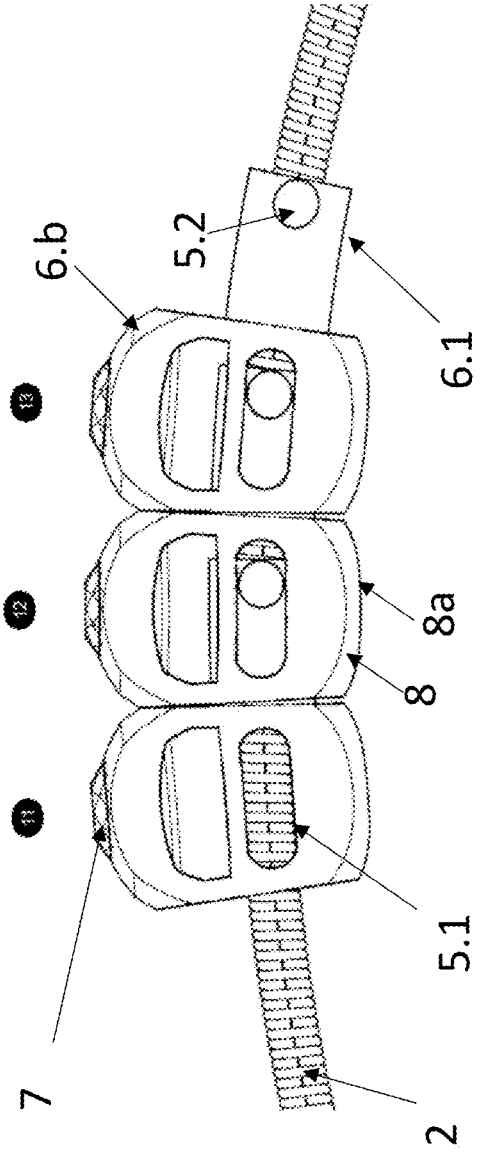

FIG. 19

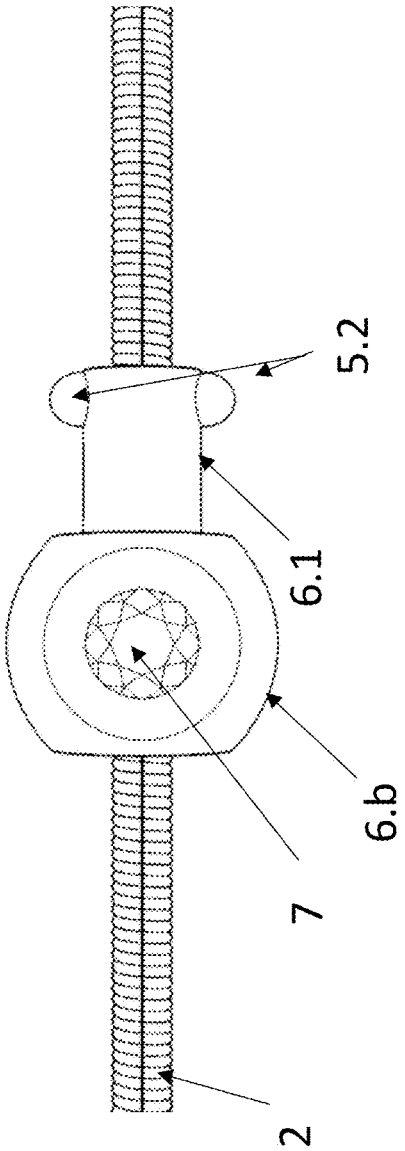

FIG. 20

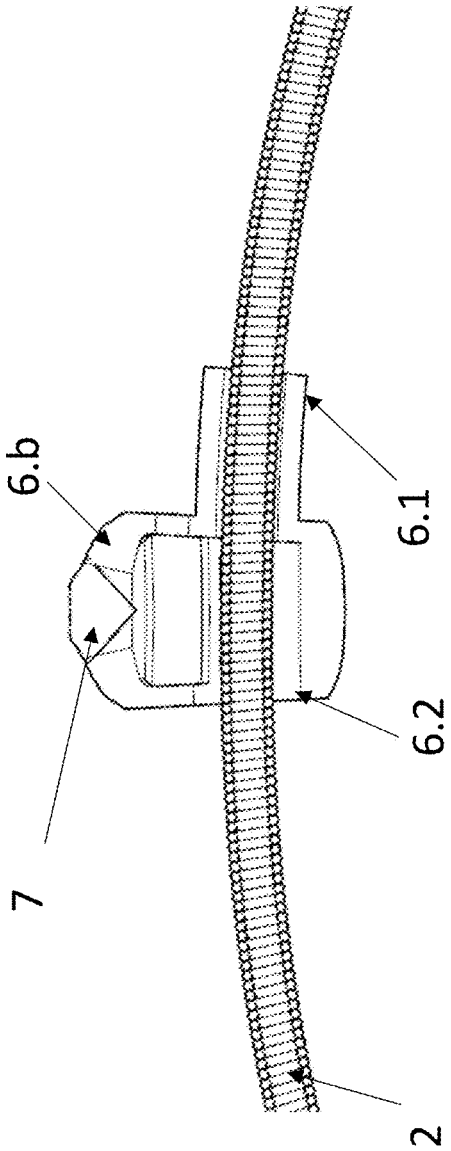

FIG. 21

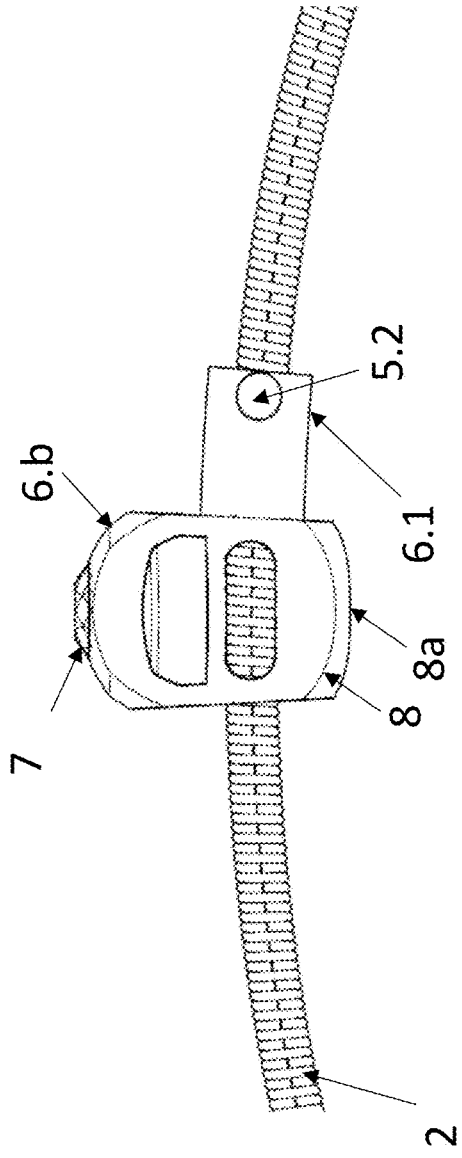

FIG. 22

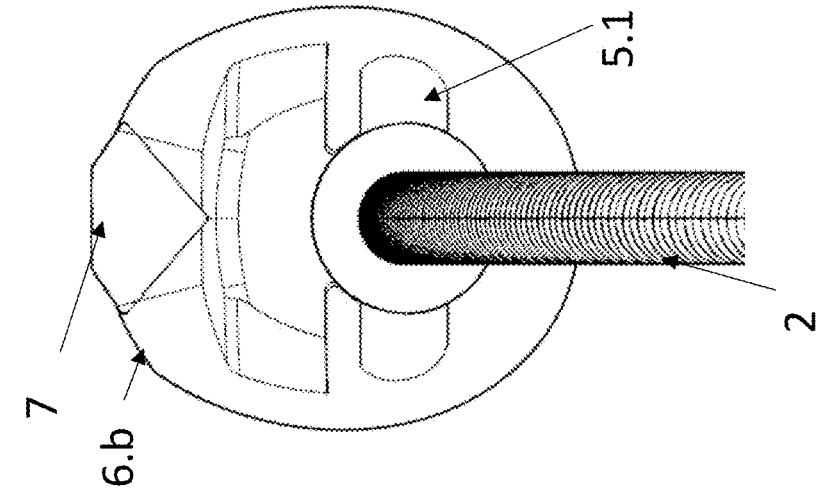

FIG. 25

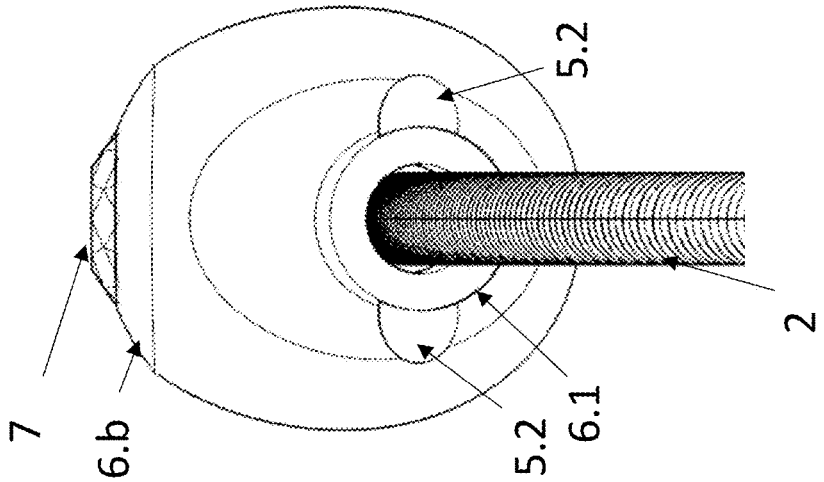

FIG. 24

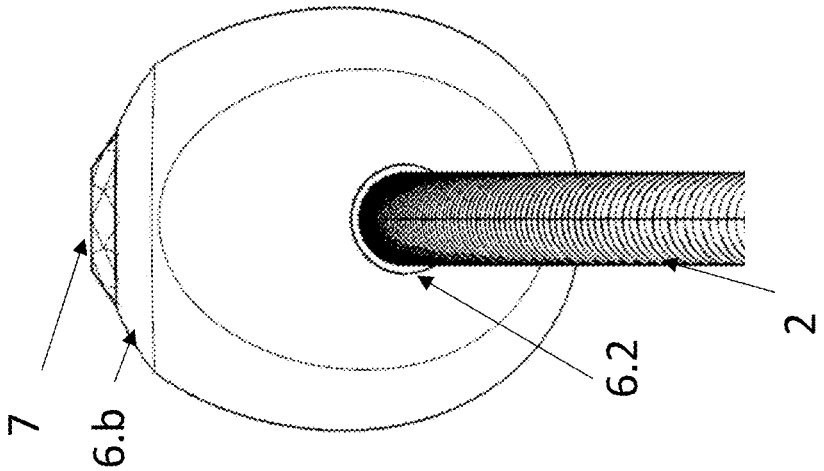

FIG. 23

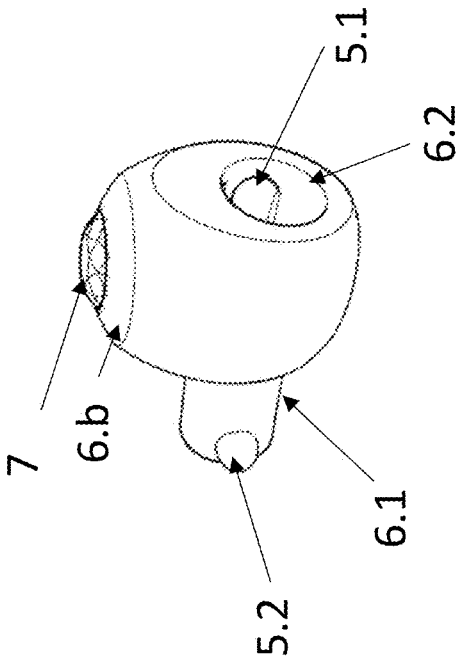

FIG. 27

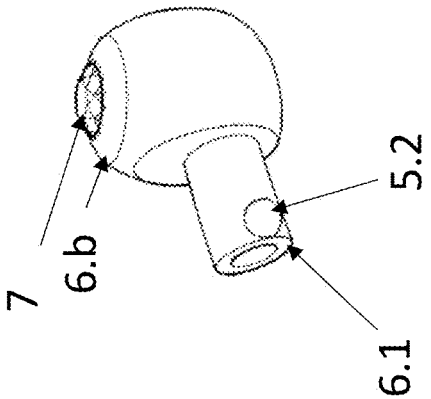

FIG. 26

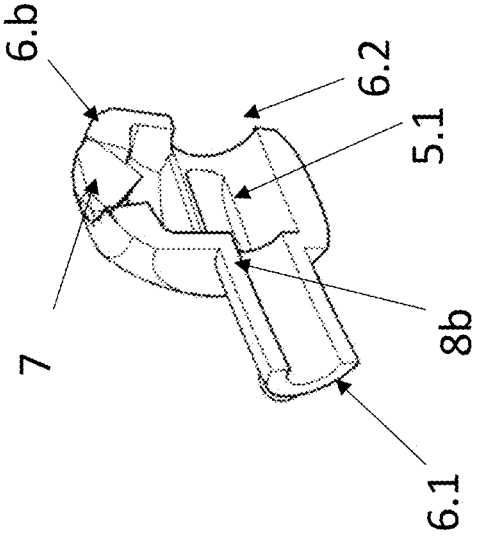

FIG. 29

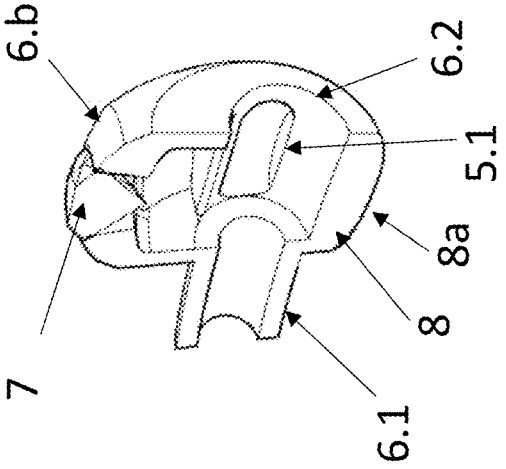

FIG. 28

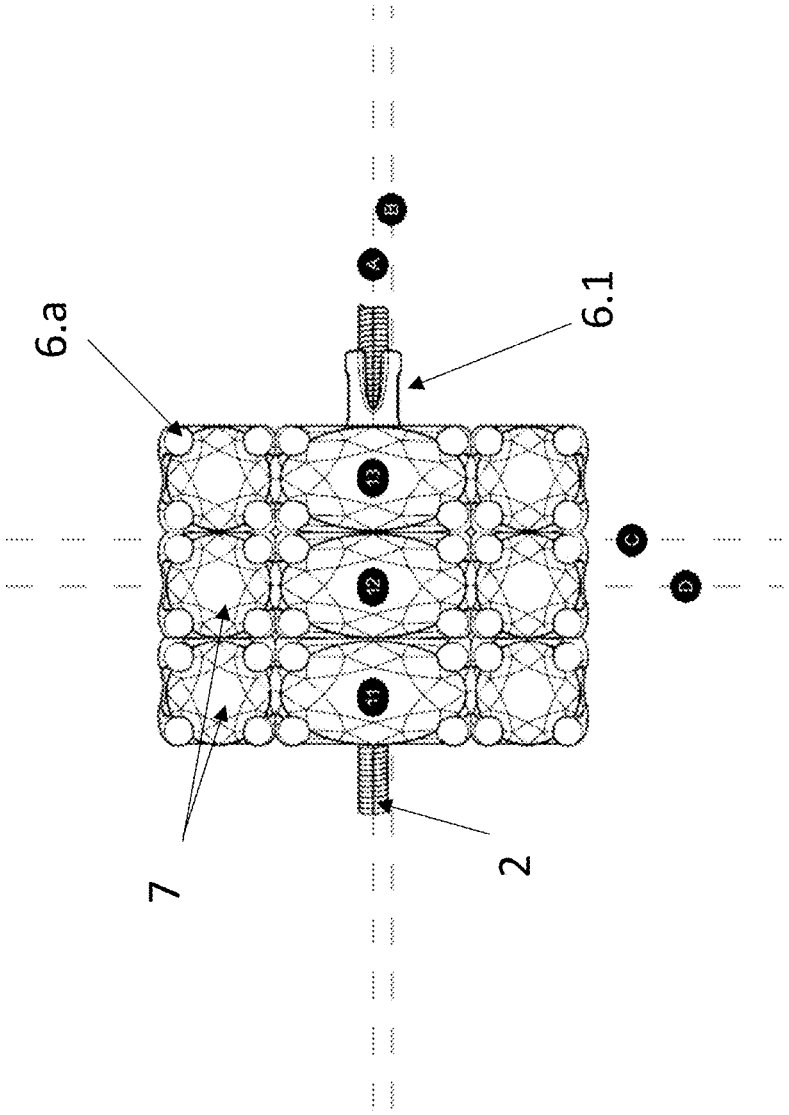

FIG. 30

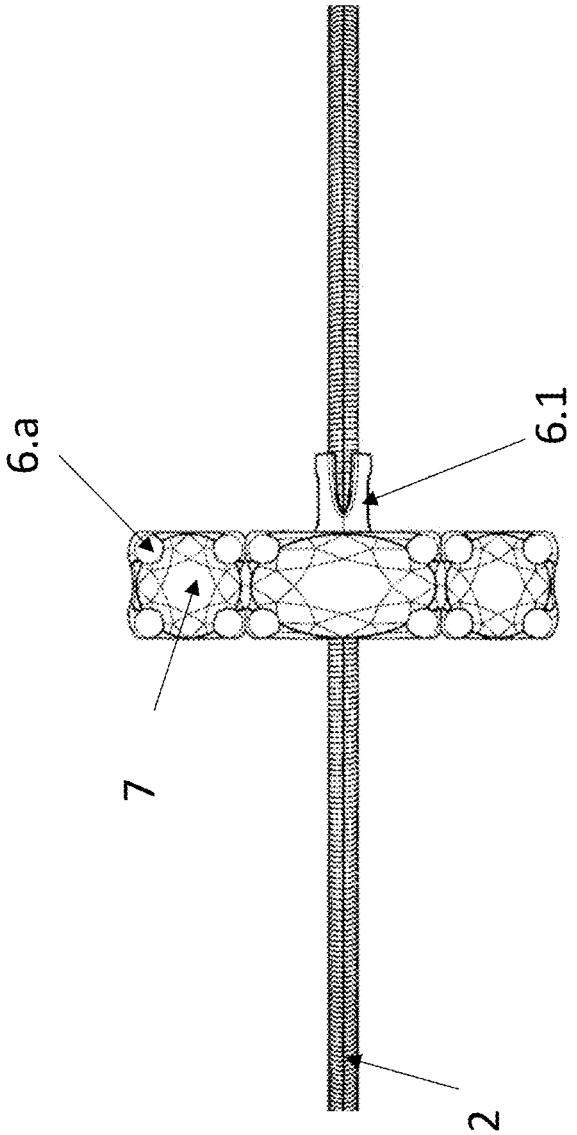

FIG. 31

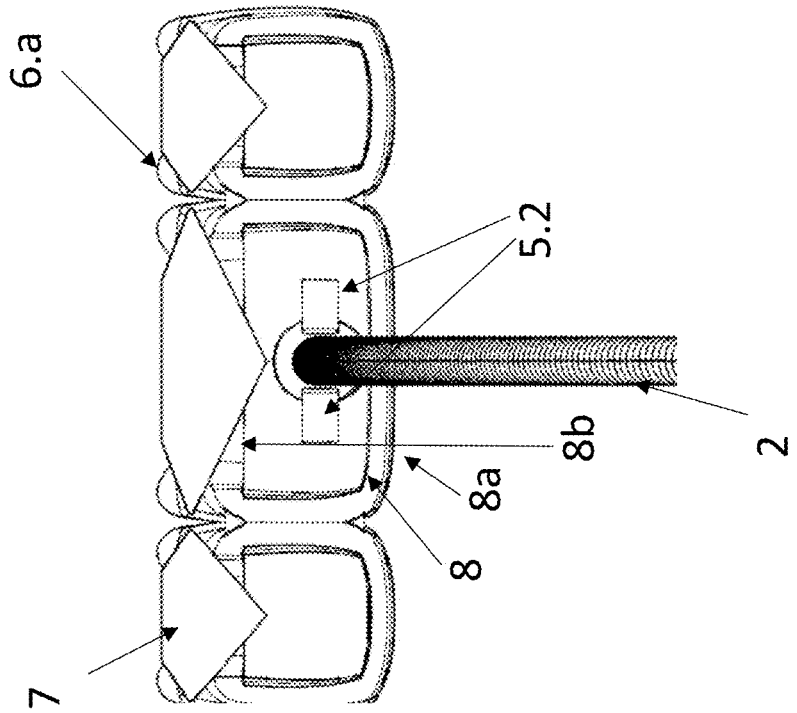

FIG. 33

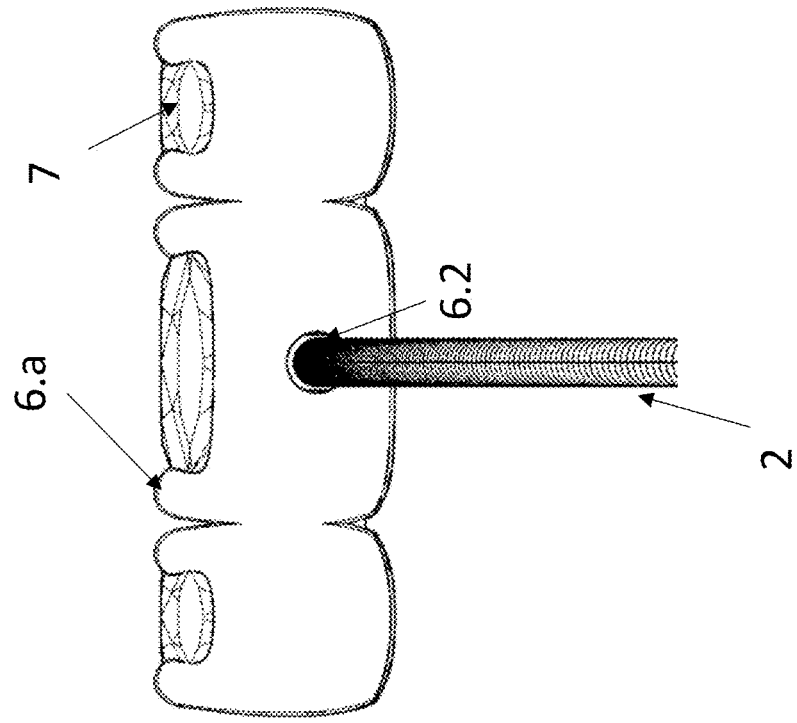

FIG. 32

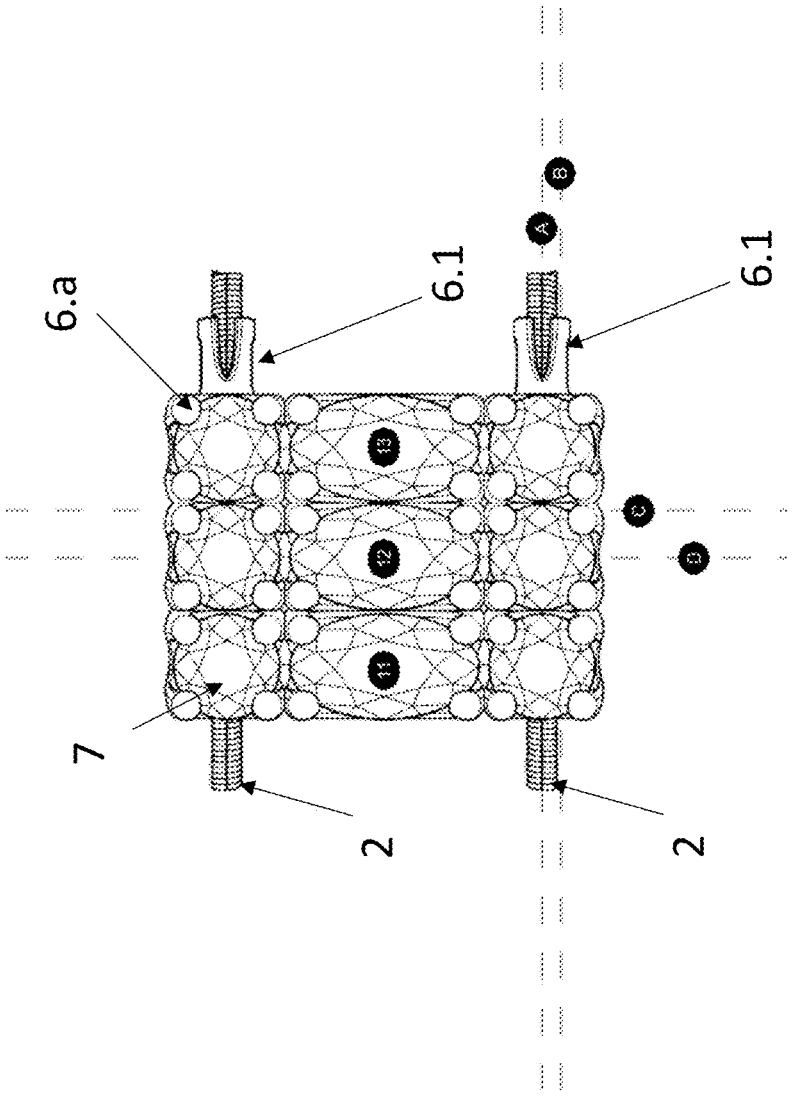

FIG. 34

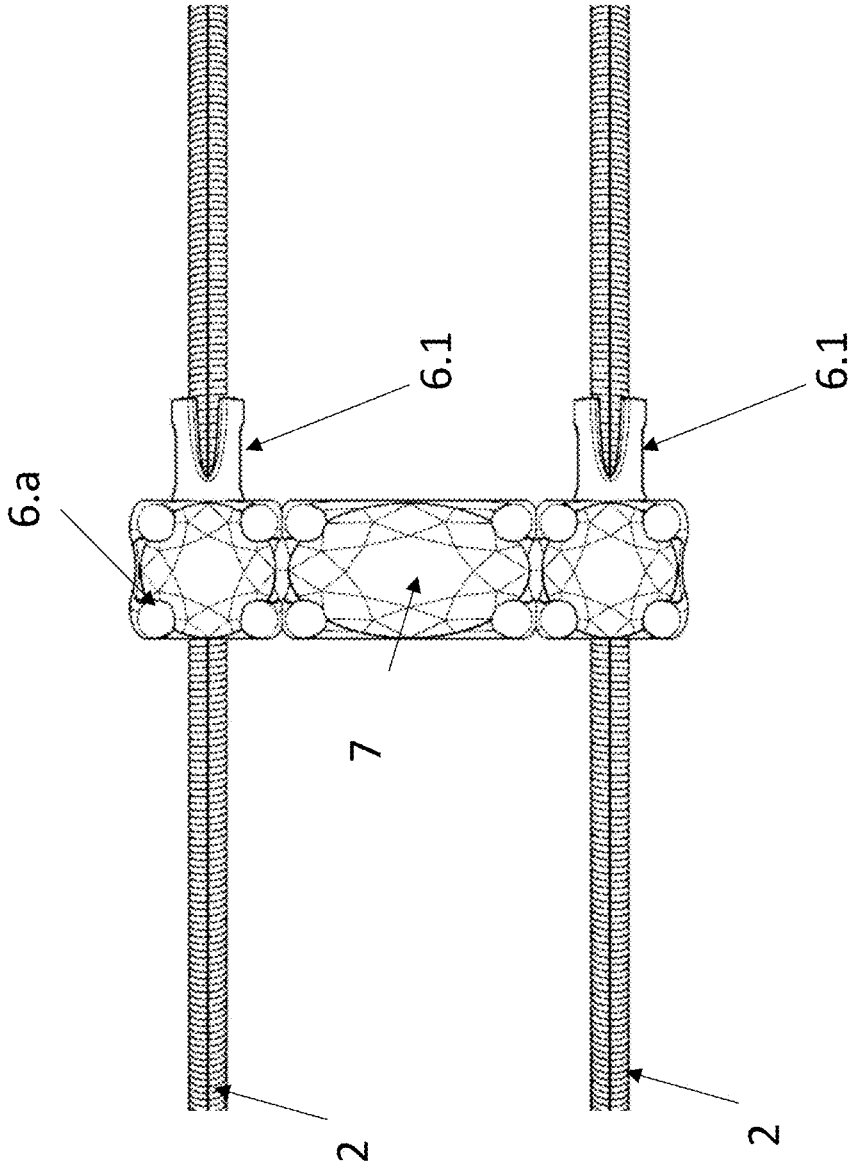

FIG. 35

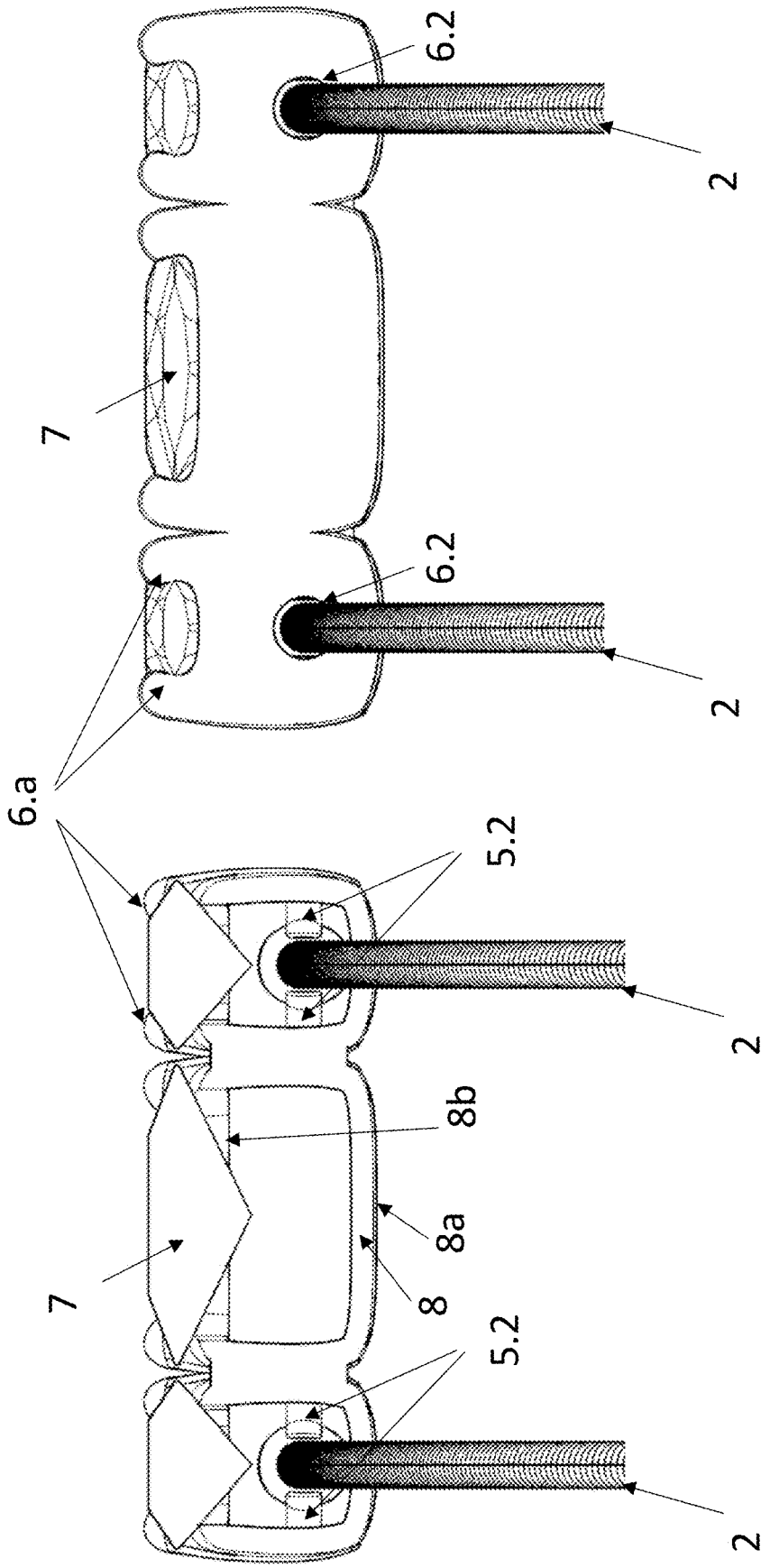

FIG. 36

FIG. 38

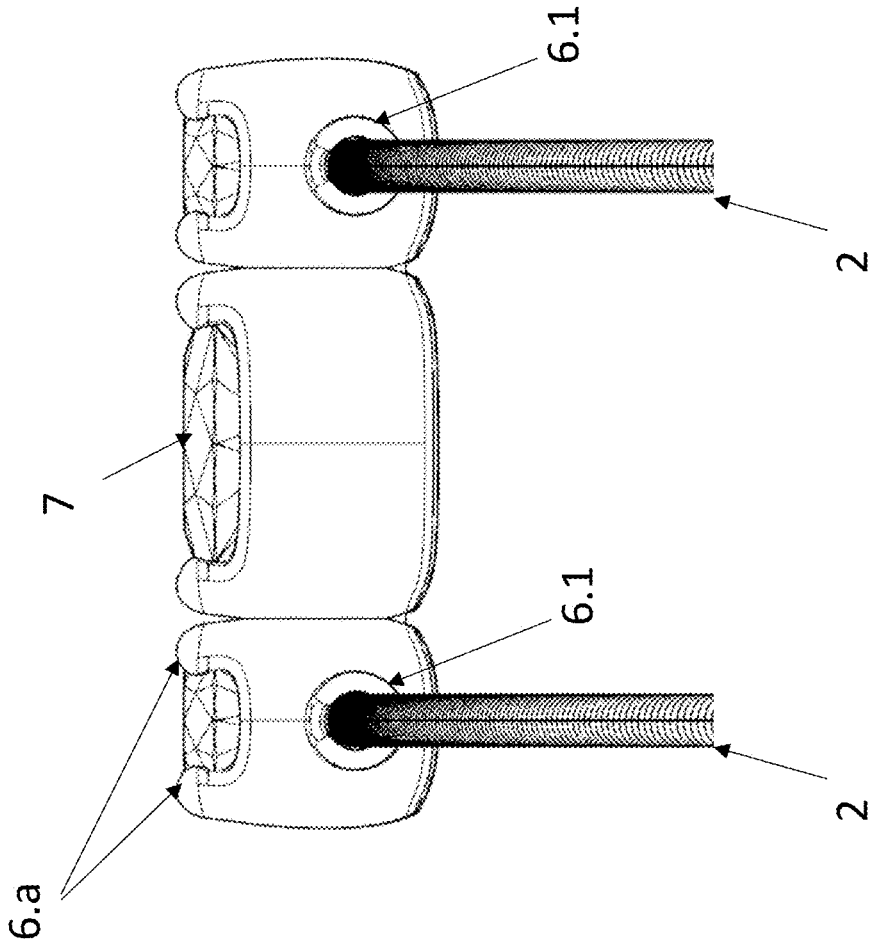

FIG. 37

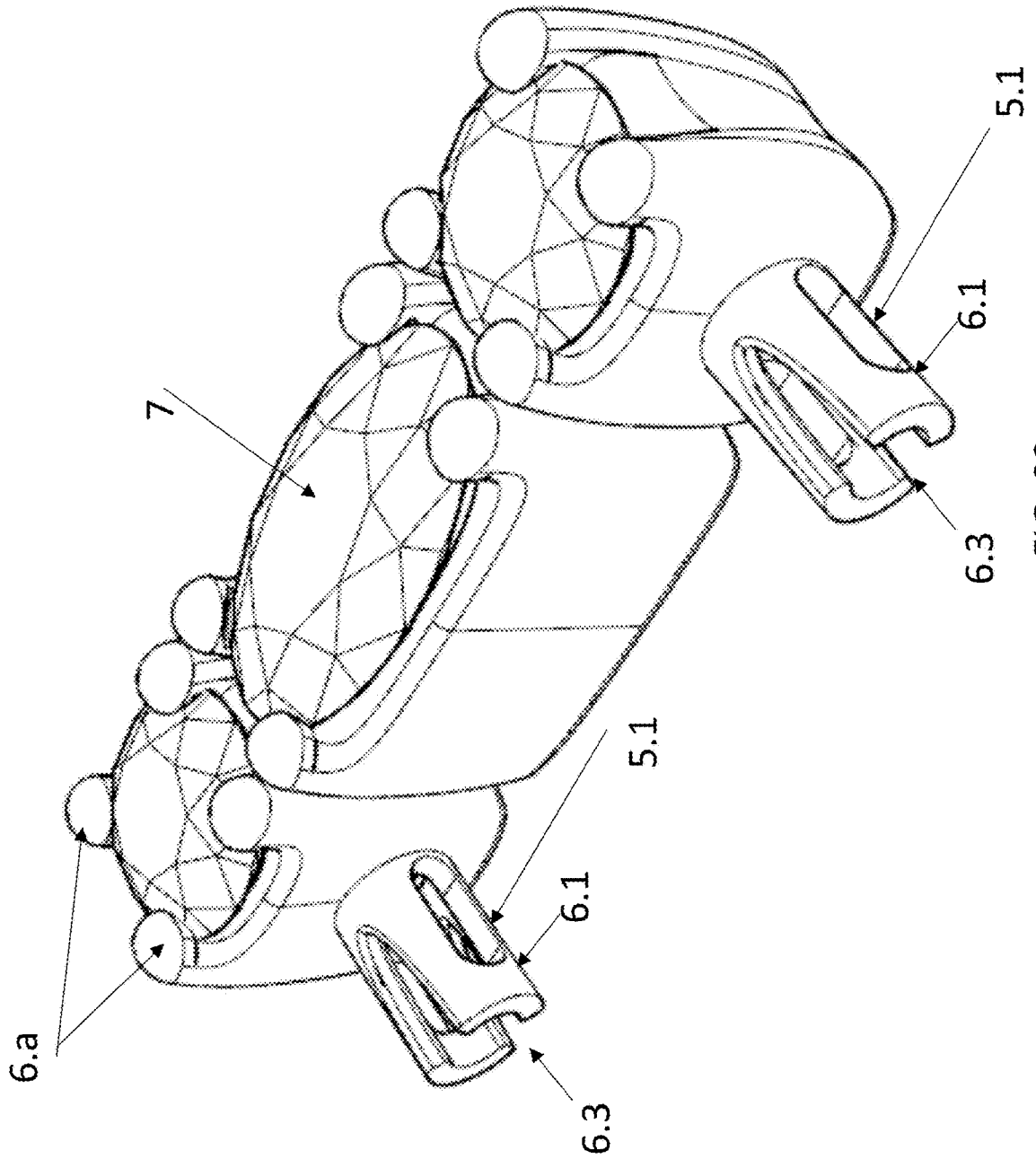

FIG. 39

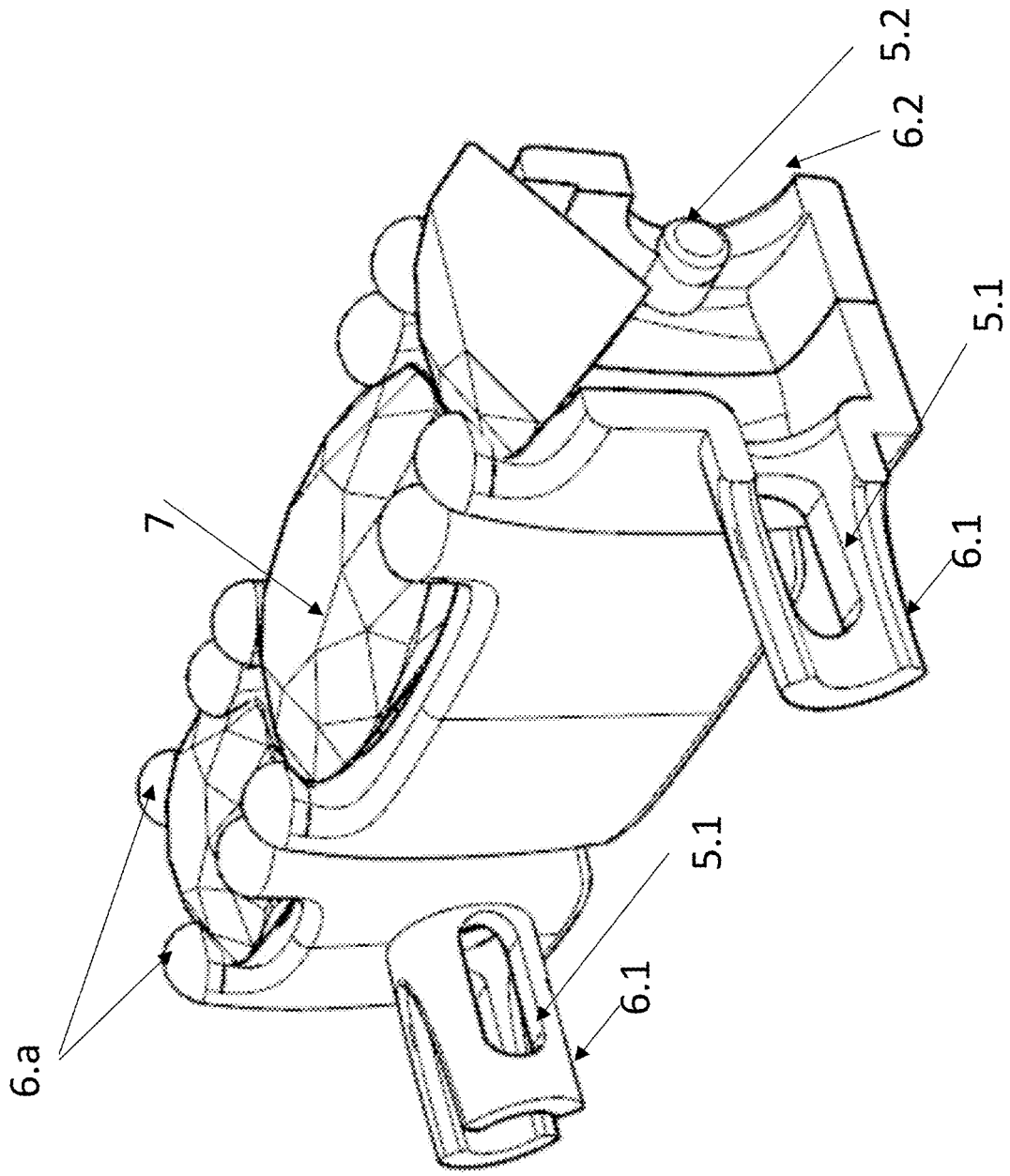

FIG. 40

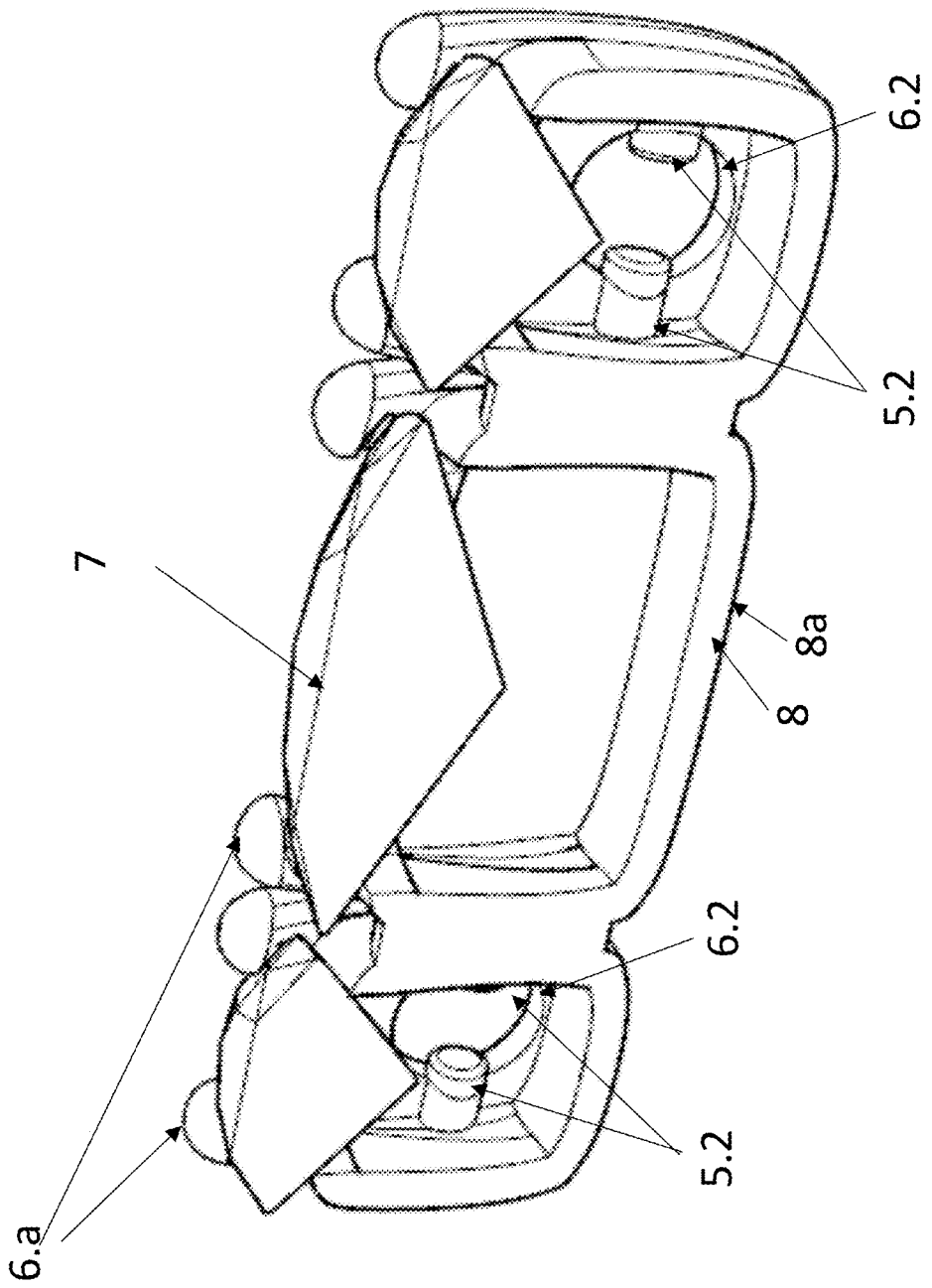

FIG. 41

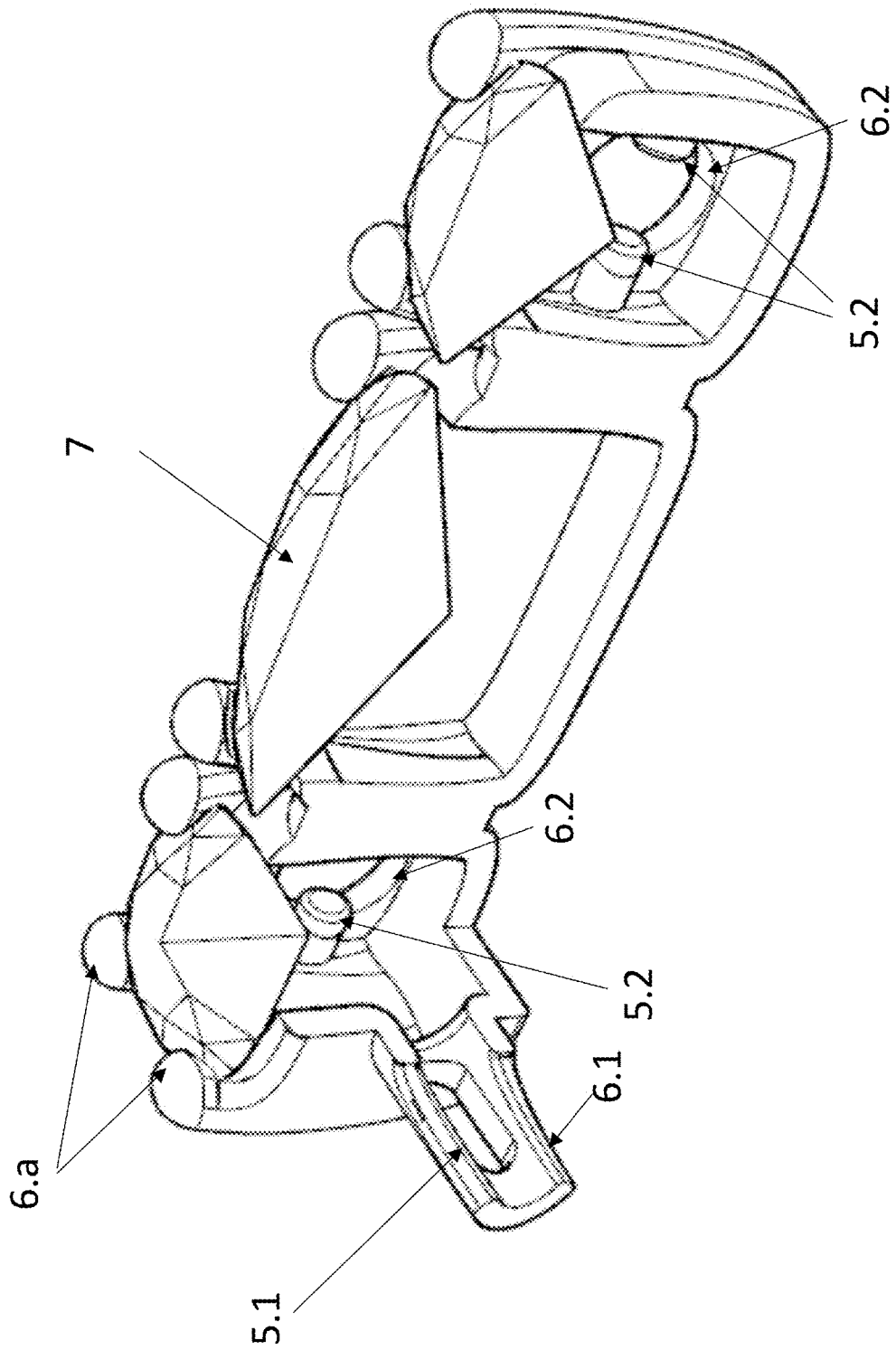

FIG. 42

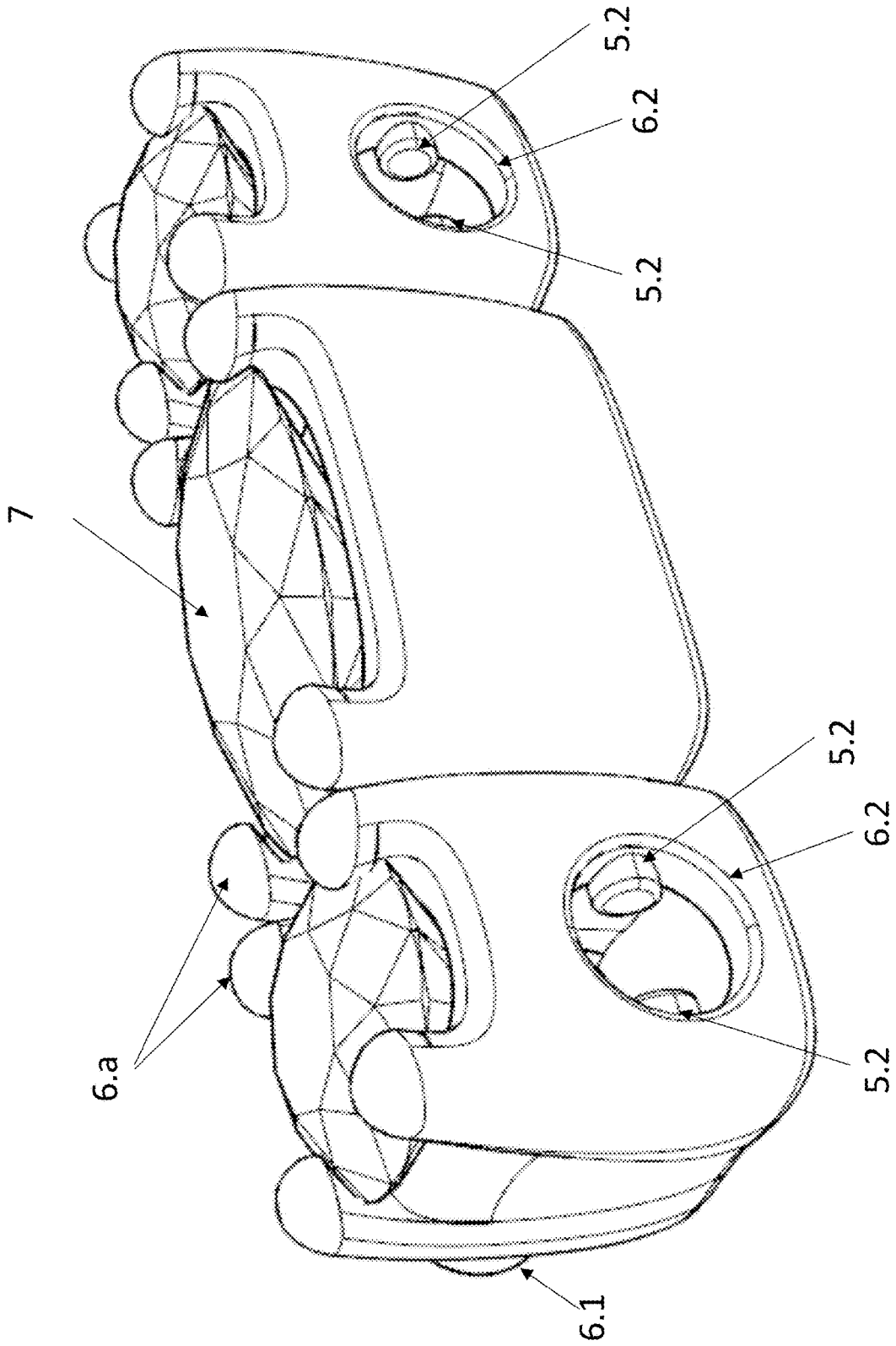

FIG. 43

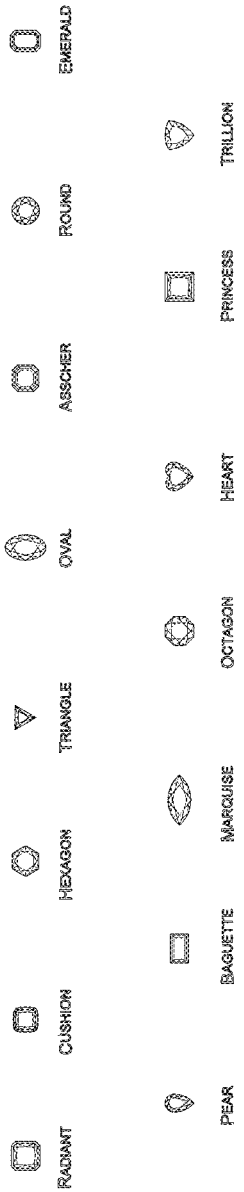
RADIANT
CUSHION
HEXAGON
TRIANGLE
OVAL
ASSCHER
ROUND
EMERALD
PEAR
BAGUETTE
MARQUISE
OCTAGON
HEART
PRINCESS
TRILLION

FIG. 44

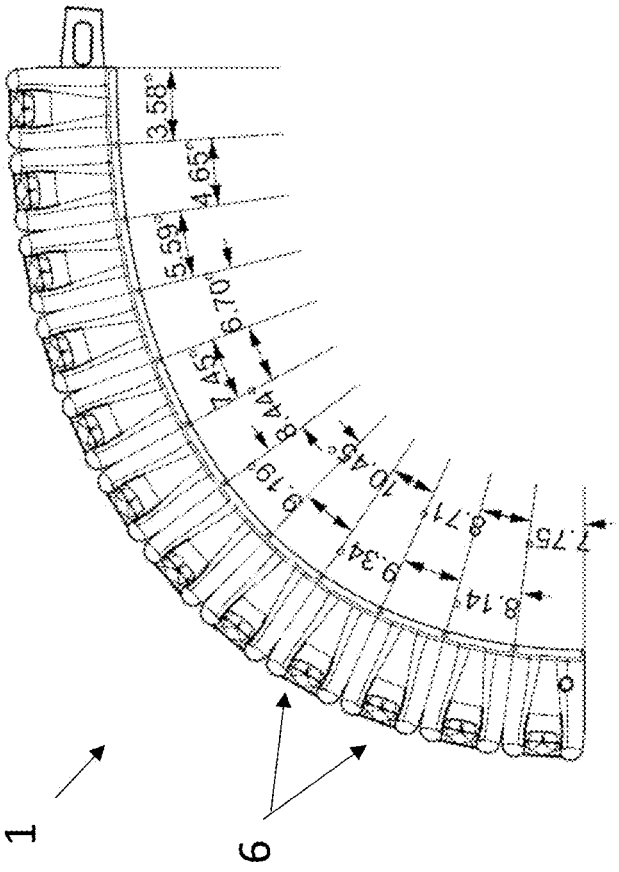

FIG. 45

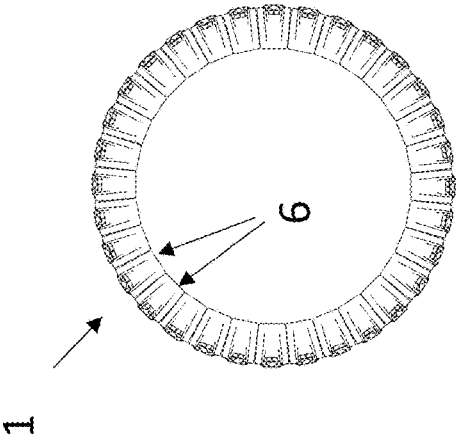

FIG. 47

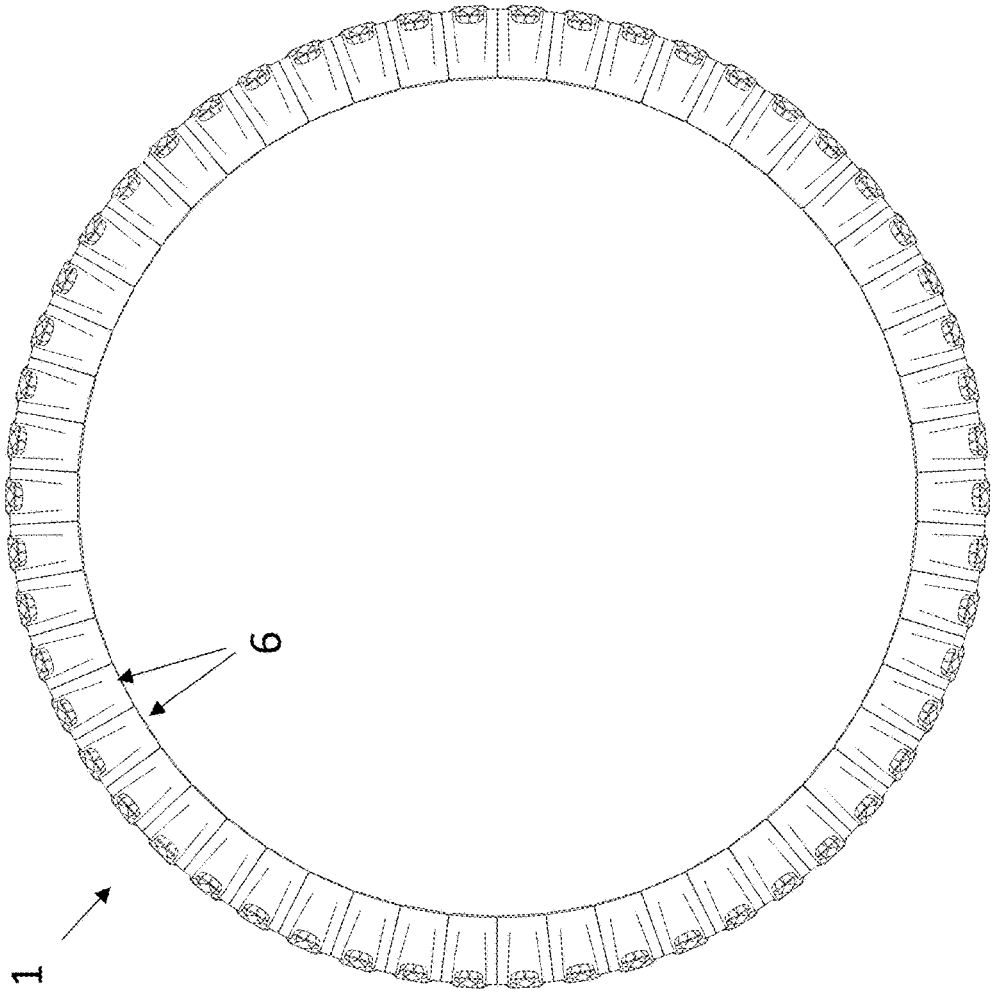

FIG. 46

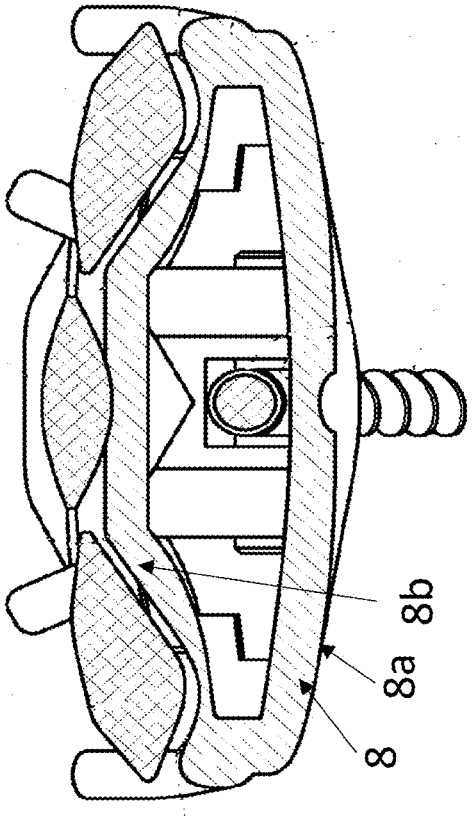

FIG. 48

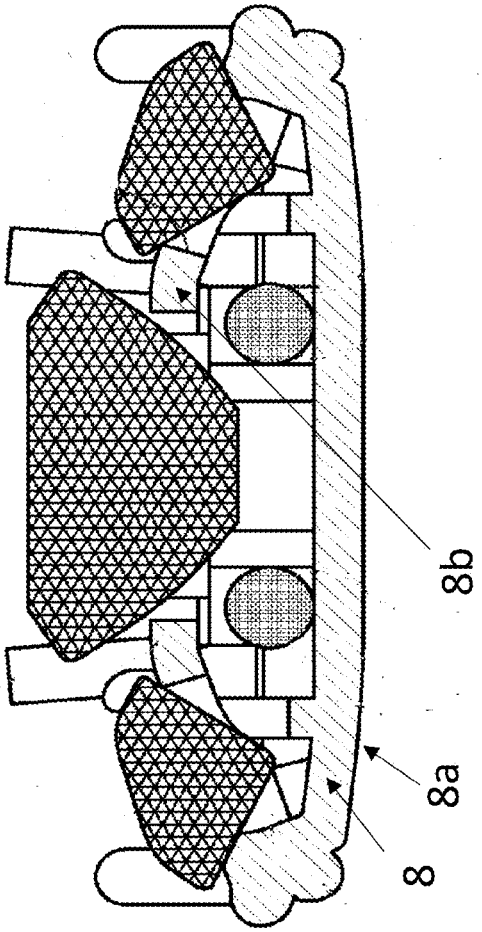

FIG. 49

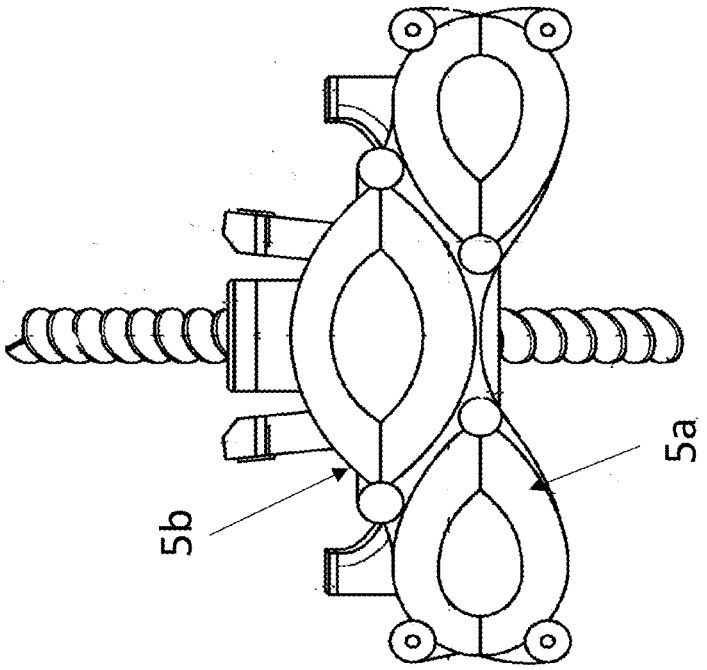

FIG. 50

EXTENSIBLE JEWELRY ITEMS

FIELD

[0001] The present discloses relates to a jewelry item. Such jewelry item can be for example a ring adapted to be worn on a finger of a user, a bracelet or any other kind of chain-like item. Such jewelry item can be either made all in precious and non-precious metal as well as ornated with precious and semiprecious gemstones of any size and shape, set in prongs or bezels, for aesthetic reasons. Both bracelets and rings or any other kind of chain-like item can be made in either circular or elliptical shape.

BACKGROUND

[0002] As it is known in the field of jewelry, the jewelry item has to adapt to the size of the body part of the owner, for example a finger in case of a finger ring and a wrist in case of a bracelet. Historically, adapting the jewelry item was a complex and lengthy operation, often requiring the work of a skilled jeweler or goldsmith. In order to partially overcome this drawback, it has been known for some time to craft jewelry items as chains comprising a plurality of links. These links have each a first and second edge, and the first edge of each link is designed to couple with the second edge of the next link. Usually, the first and second edge are secured by a pin or a similar device, so they can rotate with respect to each other.

[0003] The kind of known jewelry items described above can be lengthened or shortened by adding or removing links. A disadvantage of such jewelry items is that, while they usually do not need a skilled goldsmith to change size, they still have a somewhat complex structure. This complicates assembly, disassembly as well as replacement, addition or removal of links.

[0004] Additionally, such jewelry item, particularly in case of finger rings, cannot be adapted to small changes in size because, while each link is relatively small, its addition or removal still produce a big change in size.

[0005] Extensible bracelets are known in the art and are disclosed, for instance, in U.S. Pat. No. 5,605,059, EP 2712513, U.S. Pat. Nos. 2,608,050 and 1,250,153.

[0006] U.S. Pat. No. 5,605,059 discloses a bracelet with an elastic ring having links mounted thereon that are able to slide relative to each other and to the elastic ring, to change the diameter of the bracelet and adapt the diameter of the wrist of the bracelet wearer. Each link consists of a male element that fits into the hole of an adjacent link.

[0007] EP 2712513, U.S. Pat. Nos. 2,608,050 and 1,250,153 also disclose a bracelet with an elastic ring with links mounted thereon that are able to slide relative to each other and to the elastic ring. The links comprise a sleeve with two opposite holes and a sleeve with two male elements that are coupled to respective holes of adjacent sleeves for the two adjacent sleeves to be able to move relative to each other and to the male elements.

[0008] Other examples of extensible bracelets are disclosed in US-RE-25,163, U.S. Pat. Nos. 2,518,507, 2,718,750 and US 2018/0008018

[0009] Nevertheless, the bracelets as disclosed and illustrated in the above-mentioned documents are characterized by a complex structure that complicates assembly, disassembly as well as any replacement, addition or removal of links and the construction of the individual parts. Furthermore, in these bracelets, the extension and contraction movements of the elastic ring or to a greater diameter and a smaller diameter respectively are not smooth and can be affected by stick-slip effects, causing user dissatisfaction, especially in case of precious metal bracelets, that are expected to exhibit accuracy and perfection. In the cases of invention US2018/0008018 the internal elastic element is even subject to collapse; therefore, not guarantee durability.

SUMMARY

[0010] Embodiments of the invention relate to a jewelry item.

[0011] The jewelry item may comprise an elastic circular ring-shaped and/or elliptical ring-shaped support element.

[0012] The jewelry item may also comprise a circular ring-shaped and/or elliptical ring-shaped chain comprising a plurality of chain links.

[0013] Each chain links may comprise two female portions located in the extended sections of each link and two micro-male portions located internally inside each link.

[0014] Both male portions may be inserted simultaneously into the female portion of a subsequent chain link in order to lock the chain links to each other while allowing the chain links to reversibly slide from a contact position to a distant position with respect to each other.

[0015] In the elliptical version of the extensible jewelry item, the adjacent surfaces of each link are designed with individual specific taper angles, thus when assembled, the links form an elliptical shape.

[0016] The individuality of the taper angles of the adjacent surfaces of each link, could also be deployed with other extensible mechanism, such as in any of the above-mentioned patents, to create a jewelry item of elliptical shape.

[0017] Other embodiments also relate to a jewelry item. Such jewelry item may comprise a circular ring-shaped and/or an elliptical ring-shaped spring. The jewelry item may also comprises a circular ring-shaped and/or and elliptical ring-shaped chain comprising a plurality of chain links.

[0018] Each chain link is slidably attached to the support element. Also, each chain link may comprise two concave plates, one on each side and parallel to the spring, where the two female slots are located.

[0019] Each chain link may also comprise two internal posts, opposite to each other. Both posts may be simultaneously inserted into each female-slots of a subsequent chain link so as to lock the chain links to each other while allowing the chain links to reversibly slide from a contact position to a distant position with respect of each other. Such functional and sturdy micro-posts are possible due to the most recent 3-D printing technology as well as the newly discovered and much sturdy 14 k, 18K and Platinum alloys.

BRIEF DESCRIPTION OF THE DRAWINGS

[0020] Further details and specific embodiments will refer to the attached drawings, in which:

[0021] FIG. **1** is an axial view of an exemplary ring-shaped jewelry item, such as an elliptical bracelet, according to a first embodiment of the present description. FIG. **1** illustrates a ring-shaped chain **1** comprising a plurality of links **6**.

[0022] FIG. **2** is an axial sectional view the ring-shaped jewelry item of FIG. **1** taken along section line A of FIG. **4**, showing a ring-shaped support **2** extending through each

chain link **6** of the ring-shaped chain **1** and showing each chain link **6** of the ring-shaped chain **1** comprising a projection **6.1** and a receptacle **6.2** configured to receive the projection **6.1** of an adjacent chain link **6** of the ring-shaped chain **1**, in which the ring-shaped support **2** extends through the projection **6.1** and the receptacle **6.2** of each chain link **6**.

[0023] FIG. **3** is an axial sectional view the ring-shaped jewelry item of FIGS. **1** to **2** taken along section line B of FIG. **4**, showing each chain link **6** of the ring-shaped chain **1** comprising a projection **6.1** and a receptacle **6.2** configured to receive the projection **6.1** of an adjacent chain link **6** of the ring-shaped chain **6** and showing first female elements **5.1** located on the projection **6.1** of each chain link and showing first male elements **5.2** located in the receptacle **6.2** of each chain link, wherein the first male elements **5.2** are inserted into the first female elements **5.1** of the adjacent chain link **6**. It will be understood the jewelry item may include second female elements **5.1** located on the projection **6.1** of each chain link **6** and second male elements **5.2** located in the receptacle **6.2** of each chain link, wherein the second male elements **5.2** are inserted into the second female elements **5.1** of the adjacent chain link **6**. The second female elements **5.1** and second male elements **5.2** may be located directly opposite to the first female elements **5.1** and first male elements **5.2**.

[0024] FIG. **4** is a radial view of chain links **6** on the ring-shaped support **2** of the ring-shaped jewelry item of FIGS. **1** to **3**, showing section lines A, B, C, and D. FIG. **4** shows that chain links **6** each comprise a projection **6.1** configured to be received by a receptacle **6.2** of an adjacent chain link of the ring-shaped chain **1** of FIGS. **1** to **3**. FIG. **4** shows the ring-shaped support **2** extending through the projection **6.1** and the receptacle **6.2** of each chain link of the ring-shaped chain **1**. FIG. **4** further shows prongs **6.***a* and gemstones **7**.

[0025] FIG. **5** is an axial sectional view of chain links of the ring-shaped jewelry item of FIGS. **1** to **4** taken along section line A of FIG. **4**. FIG. **5** shows that chain links each comprise a projection **6.1** configured to be received by a receptacle **6.2** of an adjacent chain link **6** of the ring-shaped chain **1** of FIGS. **1** to **3**. FIG. **5** shows the ring-shaped support **2** extending through the projection **6.1** and the receptacle **6.2** of each chain link of the ring-shaped chain **1**. FIG. **5** further shows prongs **6.***a* and gemstones **7**.

[0026] FIG. **6** is an axial sectional view of chain links of the ring-shaped jewelry item of FIGS. **1** to **5** taken along section line B of FIG. **4**. FIG. **6** shows that chain links each comprise a projection **6.1** configured to be received by a receptacle **6.2** of an adjacent chain link **6** of the ring-shaped chain **1** of FIGS. **1** to **3**. FIG. **6** shows the first female element **5.1** located on the projection **6.1** and the first male element **5.2** located on the receptacle **6.2**, wherein the first male element **5.2** are inserted into the first female element **5.1** of the adjacent chain link. FIG. **6** shows the ring-shaped support **2** extending through the projection **6.1** and the receptacle **6.2** of each chain link of the ring-shaped chain **1**. FIG. **6** further shows prongs **6.***a* and gemstones **7**.

[0027] FIG. **7** is a radial sectional view of a chain link of the ring-shaped jewelry item of FIGS. **1** to **6** taken along section line A of FIG. **4**. FIG. **7** shows that the chain link comprises a projection **6.1** configured to be received by a receptacle **6.2** of an adjacent chain link of the ring-shaped chain **1** of FIGS. **1** to **3**. FIG. **7** shows the ring-shaped support **2** extending through the projection **6.1** and the receptacle **6.2** of the chain link of the ring-shaped chain **1**. FIG. **7** further shows prongs **6.***a* and gemstones **7**.

[0028] FIG. **8** is an axial sectional view of the chain link of FIG. **7** of the ring-shaped jewelry item of FIGS. **1** to **7** taken along section line A of FIG. **4**. FIG. **8** shows that the chain link comprises a projection **6.1** configured to be received by a receptacle **6.2** of an adjacent chain link of the ring-shaped chain **1** of FIGS. **1** to **3**. FIG. **8** shows the ring-shaped support **2** extending through the projection **6.1** and the receptacle **6.2** of the chain link of the ring-shaped chain **1**. FIG. **8** further shows prongs **6.***a* and gemstones **7**.

[0029] FIG. **9** is an axial sectional view of the chain link of FIGS. **7** and **8** of the ring-shaped jewelry item of FIGS. **1** to **8** taken along section line B of FIG. **4**. FIG. **9** shows that the chain link comprises a projection **6.1** configured to be received by a receptacle **6.2** of an adjacent chain link of the ring-shaped chain **1** of FIGS. **1** to **3**. FIG. **9** shows the first female element **5.1** located on the projection **6.1** and the first male element **5.2** located on the receptacle **6.2**, wherein the first male element **5.2** are inserted into the first female element **5.1** of the adjacent chain link. FIG. **9** shows the ring-shaped support **2** extending through the projection **6.1** and the receptacle **6.2** of each chain link of the ring-shaped chain **1**. FIG. **9** further shows prongs **6.***a* and gemstones **7**.

[0030] FIG. **10** is a circumferential view of the chain link of FIG. **7** taken from the left side of FIG. **7**.

[0031] FIG. **11** is a circumferential view of the chain link of FIG. **7** taken from the right side of FIG. **7**.

[0032] FIG. **12** is a sectional circumferential view of the chain link of FIG. **7** taken along section line C of FIG. **7**.

[0033] FIGS. **13** and **14** are perspective views of chain link **6** of the jewelry item of FIG. **1**.

[0034] FIGS. **15** and **16** are sectional perspective view of one chain link **6** of the jewelry item of FIG. **1** taken along section line A of FIG. **4**.

[0035] FIG. **17** is a radial view of chain links **6** on a ring-shaped support **2** of a ring-shaped jewelry item according to a second embodiment of the present description, showing section lines A, B, C, and D. FIG. **17** shows that chain links **6** each comprise a projection **6.1** configured to be received by a receptacle of an adjacent chain link of the ring-shaped chain **1**. FIG. **17** shows the ring-shaped support **2** extending through the projection **6.1** and the receptacle **6.2** of each chain link of the ring-shaped chain **1**. FIG. **17** further shows full bezel **6.***b* and gemstones **7**.

[0036] FIG. **18** is an axial sectional view of chain links **6** of the ring-shaped jewelry item of FIG. **17** taken along section line A of FIG. **17**. FIG. **18** shows that chain links each comprise a projection **6.1** configured to be received by a receptacle **6.2** of an adjacent chain link **6** of the ring-shaped chain **1**. FIG. **18** shows the ring-shaped support **2** extending through the projection **6.1** and the receptacle **6.2** of each chain link of the ring-shaped chain **1**. FIG. **18** further shows full bezel **6.***b* and gemstones **7**.

[0037] FIG. **19** is an axial sectional view of chain links of the ring-shaped jewelry item of FIGS. **17** to **18** taken along section line B of FIG. **17**. FIG. **19** shows that chain links each comprise a projection **6.1** configured to be received by a receptacle **6.2** of an adjacent chain link **6** of the ring-shaped chain **1**. FIG. **19** shows the first female element **5.1** located on the projection **6.1** and the first male element **5.2** located on the receptacle **6.2**, wherein the first male element **5.2** are inserted into the first female element **5.1** of the

adjacent chain link. FIG. **19** shows the ring-shaped support **2** extending through the projection **6.1** and the receptacle **6.2** of each chain link of the ring-shaped chain **1**. FIG. **6** further shows full bezel **6.***b* and gemstones **7**.

[0038] FIG. **20** is a radial view of a chain link of the ring-shaped jewelry item of the second embodiment.

[0039] FIG. **21** is an axial sectional view of the ring-shaped jewelry item of the second embodiment taken along section line A of FIG. **17**.

[0040] FIG. **22** is an axial sectional view of the ring-shaped jewelry item of the second embodiment taken along section line B of FIG. **17**.

[0041] FIG. **23** is a circumferential view of the chain link of FIG. **20** taken from the left side of FIG. **20**.

[0042] FIG. **24** is a circumferential view of the chain link of FIG. **20** taken from the right side of FIG. **20**.

[0043] FIG. **25** is a sectional circumferential view of the chain link of FIG. **20** taken along section line C of FIG. **17**.

[0044] FIGS. **26** and **27** are perspective views of chain link **6** of the jewelry item of FIG. **20**.

[0045] FIGS. **28** and **29** are sectional perspective view of one chain link **6** of the jewelry item of FIG. **20** taken along section line A of FIG. **17**.

[0046] FIG. **30** is a radial view of chain links **6** on a ring-shaped support **2** of a ring-shaped jewelry item according to a third embodiment of the present description, showing section lines A, B, C, and D. FIG. **30** shows that chain links **6** each comprise a projection **6.1** configured to be received by a receptacle of an adjacent chain link of the ring-shaped chain **1**. FIG. **30** shows the ring-shaped support **2** extending through the projection **6.1** and the receptacle **6.2** of each chain link of the ring-shaped chain **1**. FIG. **30** further shows multiple prongs settings **6.***a* and multiple gemstones **7** for each chain link.

[0047] FIG. **31** is a radial view of a chain link of the ring-shaped jewelry item of the third embodiment.

[0048] FIG. **32** is a circumferential view of the chain link of FIG. **31** taken from the left side of FIG. **31**.

[0049] FIG. **33** is a sectional circumferential view of the chain link of FIG. **31** taken along section line C of FIG. **30**.

[0050] FIG. **34** is a radial view of chain links **6** on multiple ring-shaped supports **2** of a ring-shaped jewelry item according to a fourth embodiment of the present description, showing section lines A, B, C, and D. FIG. **34** shows that chain links **6** each comprise multiple projections **6.1** configured to be received by multiple receptacles of an adjacent chain link of the ring-shaped chain **1**. FIG. **34** shows the ring-shaped supports **2** extending through the projections **6.1** and the receptacles **6.2** of each chain link **6** of the ring-shaped chain **1**. FIG. **17** further shows multiple prong settings **6.***a* and multiple gemstones **7** for each link **6**.

[0051] FIG. **35** is a radial view of a chain link of the ring-shaped jewelry item of the fourth embodiment.

[0052] FIG. **36** is a circumferential view of the chain link of FIG. **35** taken from the left side of FIG. **35**.

[0053] FIG. **37** is a circumferential view of the chain link of FIG. **35** taken from the right side of FIG. **35**.

[0054] FIG. **38** is a sectional circumferential view of the chain link of FIG. **35** taken along section line C of FIG. **34**.

[0055] FIG. **39** is a perspective views of chain link **6** of the jewelry item of FIG. **35**.

[0056] FIG. **40** is a sectional perspective view of one chain link **6** of the jewelry item of FIG. **35** taken along section line A of FIG. **34**.

[0057] FIG. **41** is a sectional perspective view of one chain link **6** of the jewelry item of FIG. **35** taken along section line D of FIG. **34**.

[0058] FIG. **42** is a sectional perspective view of one chain link **6** of the jewelry item of FIG. **35** taken along section lines A and D of FIG. **34**.

[0059] FIG. **43** is a perspective views of chain link **6** of the jewelry item of FIG. **35**.

[0060] FIG. **44** is a representation of exemplary gemstone types that may be include in the jewelry items of the present description.

[0061] FIG. **45** shows various taper angles that may be provided to provide an elliptical ring-shaped jewelry item.

[0062] FIGS. **46** and **47** shows circular ring-shaped jewelry items that may be provided by providing identical taper angles.

[0063] FIGS. **48** to **50** shown jewelry items having different mechanisms for providing for extensibility as provided in U.S. Patent Application Publication Nos. 2018/0008018 and 2016/0345690. The present description includes these and other extensibility mechanisms with the addition that different taper angles for adjacent links may be provided to provide for elliptical ring-shaped jewelry items having the conventional extensibility mechanisms.

DETAILED DESCRIPTION

[0064] An extensible jewelry item includes an annular element formed by a plurality of links and an internal titanium or stainless steel spring is mounted to extend each link. Each link has on each side an external female element and an internal male element. The female elements are micro-slots in the extended sections of each links. The male elements are internal micro-posts that extend through the female's slots to restrict the movement of the female elements of the link adjacent thereto away from each other. The micro-size of posts and slots enables the mechanism to be applied to links as small as 2.0 mm×2.0 mm×2.0 mm; therefore, also ideal for fine jewelry rings. In the elliptical version of the extensible jewelry item, the adjacent surfaces of each link are designed with individual specific taper angles; thus, when assembled, the links form an elliptical shape. In the elliptical shape, each link is numbered, and is placed in specific position. In the round version of the extensible jewelry item, the taper angles of the adjacent surfaces are all the same; therefore, the links are not numbered and is not relevant where they'll be placed.

[0065] With reference to the attached drawings, the jewelry item may be a finger ring adapted to be worn a finger of a user (e.g., see FIG. **47**). Alternatively, the jewelry item can be a circular ring-shaped bracelet (e.g., see FIG. **46**), an elliptical ring-shaped bracelet (e.g., see FIG. **1**), or an anklet or any body-fitting chain-like jewelry item.

[0066] The jewelry item comprises a ring-shaped chain **1**, which may be circular or elliptical. Each link **6** of the ring-shaped chain **1** is attached to a support element **2** (e.g., spring), and ring-shaped chain **1** is able to slide over the support element **2**. Also, the ring-shaped chain **1** is able to change its length, so as to be adaptable to a variation of finger sizes and to easily slide through variation of wrists sizes. Indeed, as the support element **2** is stretched, the ring-shaped chain **1** is able to follow the extension of the support element **2** by changing its own length.

[0067] The ring-shaped chain **1** comprises a plurality of chain-links **6**. Preferably the number of links **6** is variable

depending on the size of the links **6** as well as on the particular type of jewelry **1**. For example, in case of finger rings, the number of links **6** can be comprised between 5 and 30. Alternatively, in case of a bracelets, the number of links **6** can be comprised between 10 and 70.

[0068] With more detail, each link **6** is slidably attached to the support element **2**. Therefore, with respect to each link **6** may be defined with respect to a radial direction "R", an axial direction "A", and a circumferential direction "C" transverse to the axial and radial directions. See FIGS. **1** and **4**.

[0069] The links **6** are attached to each other so that they can change the reciprocal distance in order to allow the link-chain **1** to change their length. In other words, the length of the link-chain **1**. changes depending on the distance in between the links **6**. Also, each link **6** may comprise a plate **8** having a first surface **8***a* and a second surface **8***b* opposite to the first surface **8***a*. It is understood that the plate **8** can have a curvature such as illustrated in FIG. **45**.

[0070] Preferably, the plate **8** is provided with least a prong bezel **6**.*a*, a full bezel **6**.*b* or other equivalent stone setting means. The plate can be also provided in plain metal, without any gemstones **7**.

[0071] The bezel **6**.*a*, **6**.*b*. Is configured to bear a stone **7** and is in particular placed on the second surface **8***b* of the plate **8** itself. In some embodiments, each plate **8** comprises three bezels **6**.*a*, **6***b*. In other embodiments, each plate comprises one bezel. However, in other embodiments of the invention there can be any number of bezels **6**.*a*, **6**.*b*, depending on their size and on the size of the plate **8**.

[0072] In its simplest version, the plate **8** can be rectangular. More generally, the plate **8** has a first **5***a* and a second edge **5***b*. The first edge **5***a* has an outline complementary to the second edge. Therefore, the first edge **5***a* of a link **6** can be inserted into the second edge of a subsequent link when the chain links are in contact position. For example, in the embodiment of FIG. **50**, the first edge **5***a* of the plate **8** has a convex profile, while the second edge **5***b* has a matching concave profile.

[0073] In the circular version of the jewelry item, the edges **5***a*, **5***b* are radially tapered at all same angle towards the center of the jewelry item. In the elliptical version of the jewelry item, the edges **5***a*, **5***a* are radially tapered with different angles towards the center of the jewelry item in order to form an elliptical shape. See FIG. **45**. Therefore, adjacent links **6** are unique, with unique angles through the entire chain. The individual unique angles of each edges **5***a* **5***b* which maintain the jewelry item to be elliptical as shown in FIG. **1**, can be adopted to form simple link chains, to more complex link-chain and to all previously inventions of expandable/extensible jewelry items as the ones described in U.S. Patent Application Publication Nos. 2018/0008018 and 2016/0345690.

[0074] Furthermore, the first edge **5***a*, is provided with a projection **6.1** which extend outwardly from the plate **8**. The second edge, **5***b* is provided with a receptacle **6.2** to receive the projection **6.1** of the adjacent plate **8**. The projection **6.1** has a housing **6.3** for the support element **2**. The housing **6.3** and therefore the projection **6.1** run substantially along the circumferential direction "C" in order to house a portion of the support element **2**, thus securing the plate **8** on the support element **2**. The housing **6.3** is defined by two opening on the edges of **5***b* and at the edge of the projection **6.1**.

[0075] With additional details, each link **6** is provided with one housing **6.3** for each support element **2** which runs along to the circumferential direction "C" and begins from the opening in the projection **6.2** to the opening on the second edge **5***b*. Indeed, the embodiment of FIGS. **34** to **43** is provided with two housings **6.3** therefore two projections **6.1** and four openings. On the other hand, in other embodiments, the plate **8** is provided with only one housing **6.3**, therefore one projection **6.1** and two openings.

[0076] In order to attach the links to each other, each link **6** comprises two female portions i.e "slots" **5.1** and two male portions i.e. "micro-posts" **5.2**. The two slots **5.1** are located in the projection, **6.1** across from each other, running along the circumferential direction "C" and perpendicular to the radial direction "R". The "micro-posts" **5.2** are located at the internally to each link, across from each other, right near the opening **6.2** by the second edge **5***.b*. Therefore, the insertion of the micro-posts **5.1** into the slots **5.2** of a subsequent link **6**, enables to lock the links **6** to each other while also enabling each link **6** to reversibly slide from a contact position to a distanced position with respect to each other. Additionally, while locked in this way the links **6** maintain the capability to rotate with respect to each other of a certain amount, so that it is possible to change the curvature of the chain.

[0077] In the round version of the jewelry item, the projection **6.1**, therefore the slots **5.1**, are all identical and attached to the first edge **5***a* with the same angle running across the circumferential direction "C". In the elliptical version of the jewelry item are attached to the first edge **5***a* with all different angles in order to form an elliptical shape as shown in FIG. **45**.

[0078] The supporting item **2** can be a spring, a coil, a wire made of any flexible metal or material, preferably made of at least one of titanium and stainless steel.

[0079] The jewelry item comprises a elastic circular ring-shaped or elliptical ring-shaped support element **2**. Advantageously, the support element can comprise one or more springs. The spring is preferably a coil spring, and more preferably made of at least one of titanium and stainless steel.

[0080] In some embodiments, the support element **2** can comprise a single spring. For example, see FIGS. **1** to **33**. For example, see FIGS. **34** to **43**. In these examples, gemstones are round brilliant **7**.*e* and oval **7**.*b* shaped set in both prongs **6**.*a* and bezels **6**.*b* link-chain.

[0081] In other embodiments, the support element **2** comprises two springs. For example, see FIGS. **34** to **43**. In this example, gemstones are round brilliant **7**.*b* and oval **7**.*e* shaped set in both prongs **6**.*a* and bezels **6**.*b* link-chain.

[0082] Each link can be made with prongs or with bezel.

[0083] Each prong and bezel link-chain can be designed to accommodate every shape of gemstone **7** from 0.03 cts to 50.00 cts. Exemplary gemstone shapes are illustrated in FIG. **44**.

[0084] Although various embodiments of the disclosed extensible jewelry item have been shown and described, modifications may occur to those skilled in the art upon reading the specification. The present application includes such modifications and is limited only by the scope of the claims.

1. An extensible ring-shaped jewelry item, comprising:

a ring-shaped support;

a ring-shaped chain comprising a plurality of chain links, wherein the ring-shaped support extends through each chain link of the ring-shaped chain,

wherein each chain link comprises:

a projection;

a receptacle configured to receive the projection of an adjacent chain link of the plurality of chain links;

first and second female elements located on the projection;

first and second male elements located in the receptacle, wherein the first and second male elements are inserted into the first and second female elements of the adjacent chain link.

2. The extensible ring-shaped jewelry item of claim **1** in the form of a circular ring-shaped jewelry item.

3. The extensible ring-shaped jewelry item of claim **1** in the form of an elliptical ring-shaped jewelry item.

4. An extensible elliptical ring-shaped jewelry item, comprising:

a ring-shaped support;

a ring-shaped chain comprising a plurality of chain links, wherein the ring-shaped support extends through each chain link of the ring-shaped chain,

wherein each chain link comprises:

a projection;

a receptacle configured to receive the projection of an adjacent chain link of the plurality of chain links,

wherein the projection and receptacle of each chain link define a taper angle such that the plurality of chain links collectively define a ring-shaped chain, and

wherein the taper angles of adjacent chain links are different to define the ring-shaped chain as an elliptical ring-shaped chain.

* * * * *