Oct. 19, 1954 P. N. CURRY 2,691,917

OPTOELECTRIC COLOR CORRECTION APPARATUS

Filed Feb. 9, 1951 2 Sheets-Sheet 1

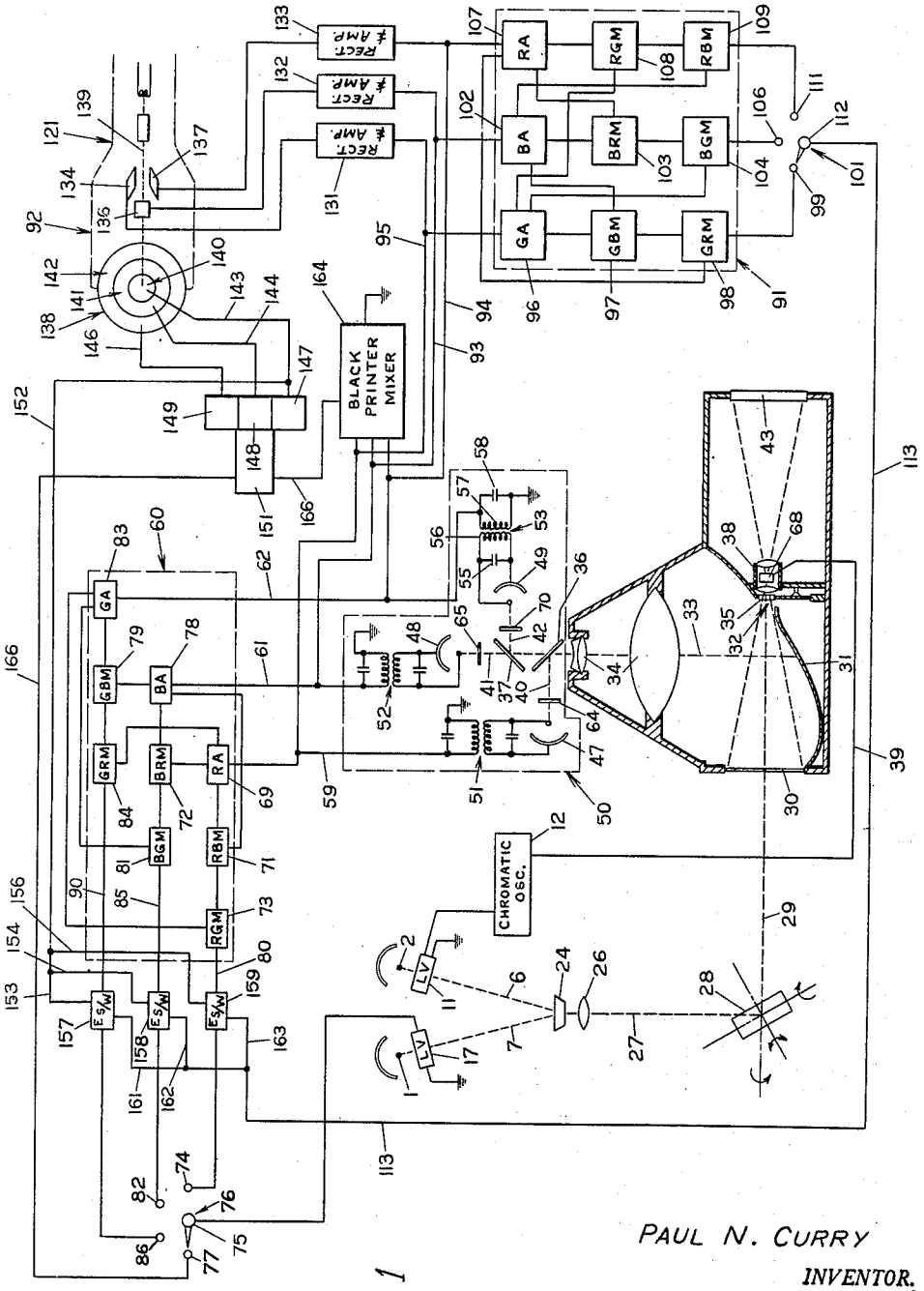

Fig. 1

PAUL N. CURRY
INVENTOR.

BY

ATTORNEY

Oct. 19, 1954 P. N. CURRY 2,691,917

OPTOELECTRIC COLOR CORRECTION APPARATUS

Filed Feb. 9, 1951 2 Sheets-Sheet 2

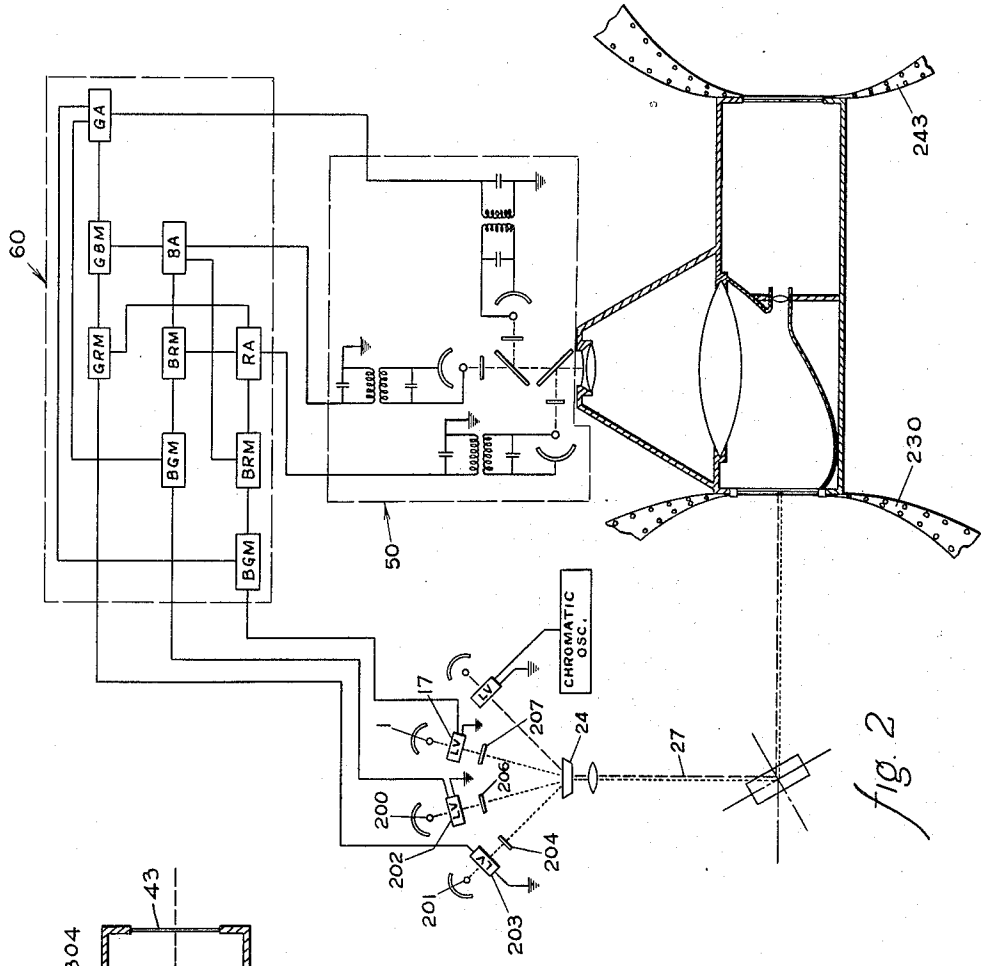

fig. 2

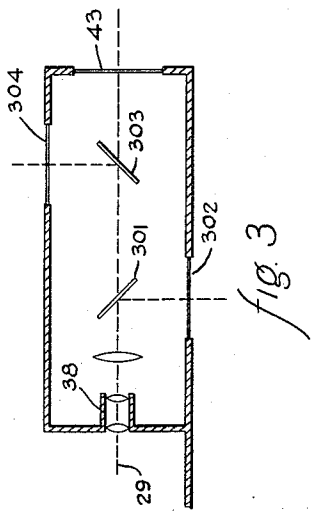

fig. 3

PAUL N. CURRY
INVENTOR.

BY

ATTORNEY

Patented Oct. 19, 1954

2,691,917

UNITED STATES PATENT OFFICE

2,691,917

OPTO-ELECTRIC COLOR CORRECTION APPARATUS

Paul N. Curry, Kalamazoo, Mich.

Application February 9, 1951, Serial No. 210,265

13 Claims. (Cl. 88—24)

1

This invention relates to color photography and particularly to the part thereof involved in the making of the color separation negatives from color transparencies.

There are many processes of making color prints, either upon photographic paper or in the photoengraving art, but the most usable of commercially applicable processes involves the preparation of either three or four negatives, according to the process used, which negatives are made so that they represent each of the following color characteristics in the transparency; red, green, blue and black. Black, however, is sometimes omitted. From each of these negatives, there may be made a photographic print, or there may be made a photoengraving plate depending upon the ultimate purpose to be served.

However, because of the discrepancies in color responding capacity between the articles appearing in nature which are photographed, the dyes used in the transparencies, the dyes used in photographic printing and the inks used in book or magazine printing of color pictures, there must always be a considerable amount of toning of each separation negative to accommodate it to the above discrepancies, in order that the final result shall present a picture to which the eye will react in about the same way that it would to the original scene in nature.

This toning is done, in presently practiced methods, by a complex system of masking. This comprises printing along with the negative representing one selected color, a weak positive bound into register with said negative and which positive represents the complementary color of the said negative in order to obtain a corrected positive print of the said selected color. By this manipulation, or others similar, the printing strength of a particular color in the positive print may be built up or toned down as desired to correct for the above mentioned discrepancies.

However, this correction my masking involves many difficulties, among the most prominent of which is the inherent mechanical difficulty of printing through two transparencies at the same time and the fact that the masks can never be made by definite analysis but must be made according to the best judgment of the operator. Further, this process frequently requires that many trial maskings be made before a wholly satisfactory one can be obtained and, hence, is extremely wasteful.

Further, it has been found desirable in recent years to effect color correction by the use of a masking procedure utilizing a weak negative rather than a weak positive. Inasmuch as particular operators may prefer one method or the other method, and on occasion it has been found that sometimes one method is preferable in a given instance and at other times the other method will be preferable, it is desirable to produce apparatus carrying out such color correcting procedures which apparatus may be able by relatively simple adjustment to carry out either of these methods.

2

Also, although the black printer is often omitted in the making of color printing plates, it is universally recognized that a much better picture will result of one is used. The difficulty, however, in the making of black printing plates arises from the difficulties in analyzing densities in a manner to reproduce accurately on the plate being exposed the true densities of the transparencies to be reproduced. Previous attempts to meet this problem by combining exposures from color separations has been unsatisfactory because these will give black in areas where there is a single pure color in the transparencies. This is not desirable for true color rendition in the printing industry but it is desirable to make a black printing plate which will show black or gray in the areas of the transparencies where it is really black or gray. If such an operation can be carried out by the same machine that will accomplish the solution of the above outlined problems, and thus make necessary employment of only a single piece of apparatus to meet all of the various above described problems, it will be readily seen that such an apparatus would be of extremely high utility.

In my Patent No. 2,309,048 I disclosed the basic outlines of a method and apparatus which would meet both or all of the above described problems. However, the specific apparatus therein disclosed had certain operating difficulties, principally the difficulty of securing sharp differentiation of the respective light beams, which has restricted its commercial attractiveness. Therefore, I have developed an improved apparatus for practicing said method by which a truly sharp differentiation may be secured, one which is considerably less expensive to build and one which has a somewhat wider range of controls. It is my present purpose to disclose and claim such apparatus herein.

Thus, a principal object of my invention is to provide an improved apparatus for carrying out the general method disclosed in my above mentioned Patent No. 2,309,048.

A further object of the invention is to provide apparatus carrying out said method which is relatively simple to construct.

A further object of the invention is to provide

apparatus, as aforesaid, which will be reliable and accurate in operation.

A further object of the invention is to provide an apparatus, as aforesaid, which will have a wide range of adjustability, and thereby enable it to carry out a wide range of specific operations.

A further object of the invention is to provide apparatus, as aforesaid, which will effect correction of color intensities accurately and efficiently.

A further object of the invention is to provide apparatus, as aforesaid, which will effect desired color intensity corrections in the exposure of a photographic negative and which will do so instantaneously and automatically but subject to the control of an operator.

A further object of this invention is to provide apparatus, as aforesaid, for preparing from a colored transparency a black printing plate or positive printer which will automatically eliminate all black from regions in the plate which are occupied by a single pure color as distinguished from mixtures of color or from black and which will properly correct gray areas in other parts of said transparency.

Other objects and purposes of my invention will be obvious to persons acquainted with apparatus of this general nature upon reading the following disclosure and examination of the accompanying drawings.

In the drawings:

Figure 1 shows a schematic diagram of apparatus built in accordance with this invention and adapted to handle one color at a time.

Figure 2 illustrates a modification adapted to handle a plurality of colors as used in moving picture film.

Figure 3 is a fragmentary view generally similar to the transparency exposing apparatus shown in Figure 1 and showing a modification thereof.

General description

The apparatus of this invention provides a pilot beam, within the meaning of the above mentioned Patent No. 2,309,048, usually comprising polychromatic light including the three primary colors, of intermittent character and of precisely controlled frequency of intermittency. There is provided, simultaneously, another beam of light, comprising one of the three primary colors and this beam constitutes an exposing beam of constant emanation. These two beams are blended into a single beam and directed onto a scanning device which directs them onto elemental areas of the transparency examined. A portion of the light passing through the transparency is split off from the main beam and onto a succesion of dispersion devices by which it is divided into red, green and blue components and these are directed onto suitable light sensitive devices. The remainder of the light passing the transparency is directed onto the light sensitive material being exposed, with or without separation into its monochromatic constituents according to the end product desired.

Said light sensitive devices are connected into filter circuits, the output of which is limited to the frequency of the pilot beam. The output potentials of the three filter circuits are then separately modulated as desired and imposed as controlling potentials onto a light valve placed in the exposing beam. Thus, the exposing beam may be increased or decreased in intensity in accordance with the analysis of the transparency made by the pilot beam. Such analysis being substantially instantaneous and therefore instantaneous for all practical purposes, said exposing beams are directed onto the light sensitive materials in their corrected intensity.

Reference is herein generally made for illustrative purposes to the copying of transparencies, but it will be appreciated that the principles hereof are equally adaptable to copying opaque pictures. Hence, language referring to transparencies should be taken as illustrative and not limiting.

Detailed explanation

Referring to Figure 1 of the drawings, there is shown schematically one specific embodiment of a device illustrating the principles of the present invention.

There are provided two light sources, 1 and 2, respectively. Light sources 1 and 2 are of such a nature as will produce polychromatic light containing selected ones of three primary colors, and preferably which will produce a substantially pure white beam.

Placed in the path of each of these beams are devices for altering said beams to give them selected characteristics. In the path of the beam 6 there is interposed a light valve 11 of any conventional kind by which the beam may be broken into a plurality of small segments of predetermined length. One advantageous type of such light valve is the well known Kerr cell operated by a high frequency oscillator 12 which may be precisely tuned to a selected frequency. Interposed in the beam 7 is a light valve 17 which is of any conventional character, as a Kerr cell, capable of passing greater or lesser quantities of light in infinite increments as determined by an applied electrical potential.

These beams of light are arranged to fall upon a prism 24 by which said beams are gathered and directed through a suitable lens group 26 by which a beam 27 of substantially parallel rays is provided. Said beam 27 is directed onto the scanning device 28. Said scanning device may be of any conventional character or it may be that disclosed in my application No. 2,309,048. From said scanning device, the beam 29a is directed onto the transparency 30 and caused to scan same in whatever particular pattern is desirable, such as that described in my Patent No. 2,309,048. Said beam 29 passes through the transparency 30 and falls next upon a mirror 31. One portion of said mirror has a small opening 32 therein. Said mirror reflects a portion of said beam, as beam 33, to and through a lens system 34 onto the transparent mirrors 36 and 37.

The portion of said beam 29 which passes through the opening 32 passes through the filter 35 to be rendered as nearly monochromatic as possible and is then gathered by the lens 38 and directed onto the photo sensitive plate 43.

The beam of light 33 striking the transparent mirrors 36 and 37 is broken into the beams 40, 41 and 42 which are caused, respectively, to pass through the red, blue and green filters 64, 65 and 70 and then strike the light sensitive devices 47, 48 and 49 of the interpreting section 50. Such light sensitive devices may be of any conventional kind but are conveniently photo-electric tubes of any standard make. Each of said photo-electric tubes is connected through a frequency filtering circuit to the respective output conductors 59, 61 and 62. Said filtering circuits may be of any conventional kind but may conveniently be as illustrated in the drawings. These comprise a capacitor 55 which is connected in parallel with a primary winding 56 and said parallel circuit is connected respec-

tively to the principal electrodes of the phototube 49. The secondary winding 57 is associated with said primary winding 56 in inductive relation therewith and is connected in parallel with a capacitor 58. The ends of said last named parallel circuit are connected respectively to ground and to the filter output conductor 62. The other light sensitive devices 47 and 48 are similarly connected to the respective filter output conductors 59 and 61.

The red sensitive output conductor 59 connects first to an amplifier 69 of a conventional sort which may hereinafter be referred to as a "red amplifier" and it is in turn connected to devices of a conventional sort by which the impulses from said red amplifier may be mixed in selectable proportions with impulses from other amplifiers hereinafter mentioned and produce a single integrated output. These elements are collectively sometimes hereinafter designated as the color modulating section 60. Said red amplifier is connected to a red-blue mixer 71 and to a blue-red mixer 72. Said red-blue mixer 71 is connected to red-green mixer 73 and the output of said red-green mixer is connected to a terminal 74 of the switch 76. The armature 75 of the selector switch 76 is connected to the light valve 17 for energizing same to control the amount of light passing from the source 1 to the gathering prism 24.

The blue output conductor 61 is connected first to a blue amplifier 78 of a conventional type and preferably of the same type as the red amplifier 69. Said blue amplifier is connected to the blue-red mixer 72, to the red-blue mixer 71 and to a green-blue mixer 79. The blue-red mixer 72 is then connected to a blue-green mixer 81 and this is connected to the terminal 82 of the selector switch 76.

The green output conductor 62 is connected to a green amplifier 83 of a conventional type and preferably similar to the red and blue amplifiers 69 and 78. The said green amplifier is connected to the green-blue mixer 79 and to the red-green mixer 73. The green-blue mixer 79 is connected to a green-red mixer 84 and this in turn is connected to the terminal 86 of the selector switch 76. Each of said mixers are of conventional sorts and function to mix the respective input pulses in predeterminable proportions and produce single integrated output pulse comprising a summation of each of the input pulses.

Now turning to the portion of the device utilized in making a black printing negative there is shown broadly a gray modulating part 91 and a comparator-selector portion 92. Each is supplied through appropriate circuitry from the color output conductors 59, 61 and 62 and each has circuitry enabling it to effect desired control over the light valve 17 upon proper position of the selector switch 76.

More specifically, the conductors 95, 93 and 94 are respectively energized from the conductors 59, 61 and 62. Pulses from the conductor 95 are led first to a green amplifier 96 of conventional sort and preferably of nature similar to the green amplifier 83. The output of said green amplifier 96 is supplied to the green-blue mixer 97 and the output thereof is supplied to the green-red mixer 98. The output of said last named green-red mixer is supplied to the terminal 99 of the selector switch 101. The conductor 93 is similarly connected through a blue amplifier 102, a blue-red mixer 103 and a blue-green mixer 104 to the terminal 106 of the selector switch 101. The conductor 94 is likewise similarly connected through the red amplifier 107, the red-green mixer 108 and the red-blue mixer 109 to the terminal 111 of the selector switch 101. As shown in the drawings the red amplifier 107 is also connected to the red-green mixer 98, the green amplifier 96 is connected to the blue-green mixer 104 and the blue amplifier 102 is connected both to the green-blue mixer 97 and to the red-blue mixer 109. The armature 112 of the connector switch 101 is connected by the conductor 113 to each of the electronic switches 159, 158 and 157 for purposes to appear hereinafter.

The comparator-selector device 92 may comprise any of several devices but may conveniently include a cathode tube 121 modified as hereinafter described in detail.

Continuations of the conductor 95, 93 and 94 connect to the combined rectifiers and amplifiers 131, 132 and 133, respectively. The output of each of these rectifier and amplifier circuits are connected to each of the cathode beam control plates 134, 136 and 137, respectively. The target 138 of the cathode beam 139 is divided into three sections, an inner section 140, a middle section 141 and an outer section 142. Each of these sections is of electrically conductive material and is insulated from the adjacent sections. The conductors 143, 144 and 146 connect each of these sections to amplifier control devices 147, 148 and 149, respectively. These amplifier control devices control, either mechanically or electrically, the magnitude of amplification effected by the amplifier 151 for purposes appearing hereinafter. A conductor 152 connects the conductor 143 to each of the conductors 153, 154 and 156 which, in turn control, respectively, the electronic switches 157, 158 and 159, for purposes appearing hereinafter. Said electronic switches under the control of pulses from the conductor 152 select whether the terminals 86, 88 and 74 are energized from the conductors 90, 85 and 80 or from the conductors 161, 162 or 163. For purposes of description here it will be assumed that when conductor 152 is energized the said switches will connect conductor 113 to the selector switch 76 and will disconnect the conductors 80, 85 and 90, and when it is deenergized said switches will connect selector switch 76 with conductors 80, 85 and 90 and will disconnect conductor 113.

Conductors leading from the filter output conductors 59, 61 and 62, respectively, in addition to energizing the conductors 95, 93 and 94 are also connected to the black printer mixer 164 wherein impulses from each of said conductors are integrated in predetermined and controllable portions and delivered as a single integrated series of pulses to the conductor 166. Interposed, however, in conductor 166 is the amplifier 151 whereby the pulses delivered by the black printer mixer 164 are amplified by a selected amount. The selection of this amount of amplification is effected by the amplifier control devices 147, 148 and 149 according to the energization thereof from the comparator-selector device 92 as hereinafter further explained. The conductor 166 then connects to the terminal 77 of the selector switch 76.

Operation

Although the operation of this device has already been sufficiently indicated above that it is probably now apparent, it will be further detailed herein for the purpose of completeness.

The two light beams emanating from the sources 1 and 2, respectively, are gathered by the prism 24 and directed by the lens system 26 onto the scanning mechanism 28. Said scanning mechanism then directs the beam 29 onto the transparency 30 for scanning same in any known manner, providing only that such scanning is of sufficiently small elemental areas and is in such a pattern as to produce a smooth end result. Such scanning methods are well known and, further, one preferred scanning method is described in my Patent No. 2,309,048.

The portion of the beam 29 which, as beam 33, strikes the several light sensitive devices does so as a pulsating beam wherein the pulsations originate in the beam 6. Thus, while the output of the several light sensitive devices will be a function of the intensity of the total beam striking each thereof, the output of the respective filter circuits will be a function only of the portion of the beam 33 which originates in the beam 6, namely, the portion which is of such a frequency that the responses thereto in the light sensitive devices will pass the respective electric filter.

These several potentials are then amplified in whatever manner is selected and imposed onto the light valve 17, thereby controlling the intensity of the monochromatic light directed onto the scanning device 28 in any predetermined pattern. As the corrected beam strikes the scanning device 28 and is thereby caused to strike the transparency 30, the exposing beam portion thereof, now corrected, will be directed onto the photo sensitive plate 43. The portion of the corrected beam passing as beam 33 through the lens system 34 and ultimately falling onto the light sensitive devices 47, 48 and 49 will not affect the output of the filter circuits 51, 52 and 53 because each of these beams appears as a steady beam and no part thereof appears at the frequency of the pilot beam and no beam not of such frequency will have any effect on the potential appearing in the conductors 59, 61 and 62.

However, it will be noted that no corresponding provision has thus far been described for blocking the portion of the beam 29 which originates with the pilot beam 6 and passes through the lens system 38 to the negative 43. This is, of course, of constant intensity and will not be affected by the corrections made to the exposing beam 7. However, this will normally be of little, or no, materiality inasmuch as its magnitude may be made sufficiently minor with respect to that of the exposing beam 7 that full and satisfactory correction control may be obtained solely from corrections of said exposing beam. However, in the event that a higher degree of precision is desired, it is possible to insert within the lens system 38 a light valve 68 synchronized by conductor 39 with the light valve 11 so as to block all light having the frequency of said pilot beam. This would, of course, result in the light emanating from said light valve 68 being of intermittent character but it would represent solely the product of the exposing beams and hence would be subject to precise intensity control.

Reviewing now the operation of the device in still further detail, the making and correcting of the green filter (red printing) plate will be studied.

For this negative it will be assumed that it is desired to reduce the red portions of the picture, particularly those that are in the blue and green areas of portions thereof, to a fractional proportion, as 70%, of their normal value in order to compensate for the greater strength of red reflecting material in the blue-green inks or dyes. Although it is wholly possible to use this equipment to make separation negatives by a procedure analogous to masking and substantially as described in my said patent, I prefer to work directly to a positive representing the red densities by use of a reversal process, such as used by the subtractive monopacks.

This enables me to eliminate several steps in th photographic process of making separation negative and then making balanced positive prints of the same, which in itself is a time consuming and difficult process and also enables me to bypass the narrow scale conditions of a paper print.

Therefore to make the red positive plate as preferred, the photosensitive plate at 43 will be made green-sensitive by the proper selection of photosensitive material and of filters. With the controls 83, 79 and 84 set in a manner which has been predetermined as appropriate for the desired correction, and the selector switch 76 set at the terminal 86, the pilot beam scans the transparency and strikes each of the light sensitive devices. As said pilot beam moves toward a green element of the transparency, the green sensitive cell 49 is energized and, through the subsequent circuitry, the light valve 17 in the exposing beam 7 is caused to increase the intensity of said beam. Thus, the beam 29 is increased and consequently the beam striking the photo plate 43 is increased in intensity. This has the effect of increasing the density in that particular elemental area of the plate. In the subsequent reversal to obtain the positive image, this effects a reduction of the density in that area, thereby reducing the red strength.

It is readily seen that any type of negative or positive maskings can be simulated by increasing or decreasing the exposing beam in the proper relations to the intelligence of the interpreting system.

With respect to the blue-green and yellow printer positives, analogous procedure is adopted, excepting that for the blue-green positive the circuitry following the red sensitive cell 47 is used and for the yellow positive the circuitry following the blue sensitive cell 52 is used, and in these cases the armature of the selector switch 76 is connected to the terminals 82 or 74 as appropriate. In this way the amplifiers and mixers may be set as desired and, according to the circuitry disclosed, they will modify each other in the proper manner to secure the desired results.

A black printing negative in present practice may or may not be used, and in any event it is difficult to prepare. If used, there is the problem of keeping the blue areas bright and lifelike for if any black is printed into these areas, the relatively weak blue inks cannot overcome the effect of the black ink and these areas become lifeless and dull. To effect this, there must be met the double problem of modifying the color components to produce a true gray result wherever there are true black or gray tones in the transparency, and also to eliminate, not merely reduce, the grays entirely in those portions of the negative corresponding to those portions of the transparency having a single pure color, particularly blue. When this is to be done, certain further corrections are required in the color separation negatives.

This problem has been met by the gray modulating section 91 modulating the tones of gray

for so long as the red, blue and yellow colors are substantially balanced in the transparency but having the comparator-selector portion 92 by which other desired results may be secured whenever any of said three colors moves more than a predetermined amount away from a true balanced condition.

More specifically, the gray modulating circuitry generally indicated at 91 operates in a manner substantially similar to the color modulating circuitry 60. It will, however, normally be set differently than the color modulating section 60 in order to secure proper rendition of gray tones since different correction of the color separation negatives is often required for reproducing gray tones as compared to the corrections required for reproducing color tints and tones. This gray modulation section controls through the conductor 113 and the selector switch 76 the light valve 17 when the light beam 29 is on a black or gray area in the same manner as the color modulating section 60 controls said light valve when said beam is on an area in which color predominates. In these cases, it becomes possible to introduce different corrections whenever the integrated pilot and exposing beam 29 strikes a portion of the transparency in which one of the three primary colors predominates over the other two as compared to the corrections provided for the gray areas. When this occurs, the excitation effected by one of the electric responsive devices in the interpreting section 50 will become greater than the excitation of the other cells and corresponding pulses will be delivered through the conductors 95, 93 and 94 to the cathode control plates, 134, 136 and 137. Thus, the cathode beam 139 will no longer be equally affected by each of said plates but will move towards one of them a distance dependent upon the magnitude of said unbalance.

Therefore, in the preparation of a color separation negative the selector switch 76 will normally be set at one of the terminals 74, 82 and 86 depending upon the color concerned, and the color modulating section 60 will normally be preset to effect desired control. So long as a color predominates, the cathode beam 139 will be on either the intermediate or outer target bands 141 and 142 and the conductor 152 will not be energized. Thus, the electronic switches 157, 158 and 159 will permit the color modulating section 60 to act through this selector switch 76 to control the light valve 17. However, when a gray area is reached and the cathode beam 139 strikes the center 140 of the target area 143 the conductor 152 will be energized and this in turn will operate each of the electronic switches 156, 158 and 159 to connect the gray modulating section 91 to the selector switch 76 in place of the color modulating section 60 and by it to the light valve 17, and thus provides a different magnitude of correction, according to the setting of the parts of the gray modulating section 91, for so long as a gray area is being encountered by the exposing and pilot beam 29. As soon as beam 29 returns to a color part of the transparency, the cathode beam 139 will return to the intermediate or outer target rings, the conductor 152 will be de-energized and the electronic switches 157, 158 and 159 will also be de-energized, thus again connecting the color modulating section 60 to the light valve 17.

When making a black printer negative, the selector switch 76 is connected to the terminal 77 and the light valve 17 is then controlled through the interpreting section 50, the black mixer 164 and the conductor 166. In this case, neither the color modulating section 60 nor the gray modulating section 91 has any function but the comparator-selector section 92 continues to be important. Here, the position of the cathode beam 139, in pursuance of whether the exposing beam 139 is on a gray or a color area of the transparency, will determine through selection of the amplification selectors 147, 148 and 149 the magnitude of amplification effected in the amplifier 151. Thus, in the purely gray sections there will be a given value of the density appearing in the black printer, or a normal exposure value. In the slightly colored parts of the transparency, but those still having some gray present, there will be a slightly greater value of density effected in the black printer negative by a different magnitude of control in the light valve 17 being super-imposed upon the impulses from the integrating section 50, and in the pure color sections there will be a still further amplification effected by the amplifier 151 by which to cause a complete over-exposure or greater density in these portions of the black printer negative regardless of the impulses supplied to the black printer mixer from the interpreting section 50.

Thus, the black printer negative when reversed by subsequent development will produce a black printer positive image with well exposed detail in sections where the colors are balanced, that is, the gray or black areas. In the areas which contain only solid or deep color characteristics, that is, some color and some gray, there will be less density and, finally, in the areas where the colors are pure mixtures of color and no grays are present the printer will be completely lacking in any density at all. Thus, an ideal black printer will be provided.

It will be evident that, while I have used two target bands outside of the center area 140, to illustrate my invention, any number of such bands with corresponding gradations in control of the amplifier 151 may be employed where desired for more precise control.

Modification shown in Figure 2

The modification shown in Figure 2 may also be utilized for copying moving picture films with proper color correction. The structure and operation of the device is the same as that described above excepting only that here there are provided two additional light sources 200 and 201 with corresponding additional light valves 202 and 203. In this embodiment, each of the light sources is provided with a filter, as indicated at 204, 206 and 207, to render said beams monochromatic prior to striking the mixing prism 24. Thus, the respective light valves will each control one color of the integrated exposing beam 27. The light valves are here connected into the color modulating system 60 by conductors corresponding to the terminals 86, 82 and 74 in the structure shown in Figure 1. That is, the light source 201 and the light valve 203, being associated with a green filter are arranged with the conductor 90 in Figure 1. The light source 200 and the light valve 202, being associated with a blue filter, are arranged with the conductor 85 of Figure 1. The light source 1 and the light valve 17 being here associated with a red filter 207 are arranged with the conductor 80, associated in Figure 1 with the terminal 74. The transparency and negative holders associated in Figure 1 with the transparency 30 and the nega-

tive 43 are here modified to receive the film 230 to be copied and the film 243 to be exposed, respectively. The rest of the structure and circuit is the same as that shown in that portion of Figure 1 comprising generally the interpreting section 50 and the color modulating section 60, as will be obvious from the inspection of the drawings. The operation is also identical. Accordingly, no additional detailed description is necessary here, excepting to say that in this instance the source of monochromatic exposing beams operate simultaneously but in the same manner and with the same results as with the single beam 7 shown in Figure 1.

Modification of Figure 3

Figure 3 shows a device wherein the single beam 29 may, if desired, be split into several parts for the purpose of simultaneously exposing more than one transparency. The beam 29 passing through the lens held within the lens holder 38 passes first through the transparent mirror 301 which directs a portion of the light from said beam to the transparency 302, and the portion passing through said mirror 301 falls upon a similar mirror 303. A portion of the light is deflected to the transparency 304, and the balance passes on through said last named mirror to expose the transparency 43 in the manner above set forth. This forms no part of my invention as such and is mentioned merely to indicate the versatility of application of the subject matter of the invention.

I claim:

1. In an electrical optical system for reproducing a color photograph, the combination: means producing a pilot beam of poly-chromatic light, the intensity of said beam being non-constant with its intensity peaks occurring at a predetermined frequency; means providing a beam of monochromatic light of constant intensity constituting an exposing beam; an optical system gathering said beams into a single beam and directing same onto a single elemental area of a transparency and means causing said single beam to scan a plurality of elemental areas of said transparency; a light sensitive electric device; means holding light sensitive material; means directing a portion of the light passing through said transparency onto said light sensitive electric device and directing another portion of said light onto said light sensitive material; a frequency responsive filter circuit operatively associated with said light sensitive electric device and adapted to transmit only output impulses therefrom of said frequency; a light valve in the path of said monochromatic beam and means including controllable and selectable means comprising a modulating section connecting the output of said filter circuit to said light valve.

2. In a device for exposing light sensitive materials from a colored original and effecting predetermined modifications from the color characteristics of said original, the combination comprising: a source of monochromatic light of constant intensity for originating an exposing beam; a source of intermittent poly-chromatic light for originating a pilot beam, the frequency thereof being of a predetermined value; means causing a beam of light comprising constituents from both of said sources to scan said colored original by elemental areas; a light sensitive electrical device; an optical system receiving a portion of the light emanating from said colored original as a result of said pilot beam falling thereon and directing same onto said light sensitive electrical device; a further optical system receiving another portion of the light emanating from said colored original as a result of said scanning beam falling thereon and directing same onto said light sensitive material; an electrically controllable light value in the path of said exposing beam; an electrical filter circuit receiving the output of said light sensitive electrical device, said circuit constructed to pass only impulses of a frequency equal to said pre-determined value; conductor means connecting said filter circuit with said light valve.

3. The apparatus claimed in claim 2 including a light valve in said further optical system and means operating same in such synchronism with the frequency of said pilot beam that said valve blocks passage of light when said pivot beam is on and permits passage of light when said pilot beam of constant intensity is off.

4. In a device for exposing light sensitive material from a colored original and effecting predetermined modifications from the color characteristics thereof, the combination comprising: means providing a beam of substantially monochromatic light and constituting an exposing beam; means providing an intermittent beam of poly-chromatic light including each of the three primary colors and constituting a pilot beam, the intermittency thereof being of a predetermined frequency; means causing a beam of light comprising constituents from both of said sources to scan said colored original by elemental areas; three electrical light sensitive devices, each sensitive to one and substantially only one of the primary colors; an optical system receiving a portion of the light emanating from said colored original as a result of said scanning beam falling thereon and directing same onto each of said light sensitive devices; a further optical system receiving another portion of the light emanating from said colored original as a result of said scanning beam falling thereon and directing same onto said light sensitive material; an electrically controllable light valve in the path of said exposing beam; three electrical filter circuits receiving respectively the output of each of said light sensitive devices, each of said filter circuits being constructed to pass only impulses of said predetermined frequency; an electrically controllable light valve in the path of said exposing beam; a modulating circuit connecting one, selectively, of said filter circuits to said last named light valve.

5. In a device for exposing light sensitive material from a colored original and effecting predetermined modifications from the color characteristics thereof, the combination comprising: means providing a beam of substantially constant intensity of substantially monochromatic light and constituting an exposing beam; means providing a beam of polychromatic light including each of the primary colors and constituting a pilot beam, and means in the path thereof rendering said beam intermittent at a predetermined frequency; means causing a beam of light comprising constituents from both of said sources to scan said colored original by elemental areas; three electrical light sensitive devices, each sensitive to one and substantially only one of the primary colors; an optical system receiving a portion of the light emanating from said colored original as a result of said pilot beam falling thereon and directing same onto each of said light sensitive devices; chromatic selection

means; a further optical system receiving another portion of the light emanating from said colored original as a result of said scanning beam falling thereon and directing same onto said chromatic selection means; a plurality of optical means directing substantially monochromatic light emanating from said selection means to said light sensitive material; an electrically controllable light valve in the path of said exposing beam; three electrical filter circuits receiving respectively the output of each of said light sensitive devices, each of said filter circuits being constructed to pass only impulses of said predetermined frequency; an electrically controllable light valve in the path of said exposing beam; a modulating circuit connecting one, selectively, of said filter circuits to said last named light valve.

6. In a device for exposing light sensitive materials from a colored original and effecting predetermined modifications of the color characteristics thereof, the combination comprising: means providing three independent beams of substantially monochromatic light and representing the three primary colors, each of said beams being of constant intensity and constituting an exposing beam; means providing an intermittent beam of poly-chromatic light including each of the three primary colors and constituting a pilot beam, the intermittency thereof being of a predetermined frequency; means causing a beam of light comprising constituents from both of said sources to scan said colored original by elemental areas; three electrical light sensitive devices, each sensitive to one and substantially only one of the primary colors; an optical system receiving a portion of the light emanating from said colored original as a result of said scanning beam falling thereon and directing same onto each of said light sensitive devices; a further optical system receiving another portion of the light emanating from said colored original as a result of said scanning beam falling thereon and directing same onto said light sensitive material; an electrically controllable light valve in the path of each of said exposing beams; a modulating circuit connecting one, selectively, of said filter circuits to each, respectively, of said last named light valves.

7. A device described in claim 4, including also an electronic switch interposed between said color modulating section and said light valve; a second color modulating section connected in parallel with said first mentioned color modulating section between said filter circuit and said electronic switch whereby one color modulating section or the other thereof will control said light valve depending upon the position of said electronic switch; means responsive to said pilot beam after same has passed through the transparency for placing said electronic switch in one position when said portion of said pilot beam is substantially poly-chromatic and placing said electronic switch in another position when said portion of said pilot beam is substantially monochromatic.

8. A device described in claim 4 including also an electronic switch interposed between said color modulating section and said light valve; a second color modulating section connected in parallel with said first mentioned color modulating section between said filter circuit and said electronic switch whereby one color modulating section or the other thereof will control said light valve depending upon the position of said electronic switch; means connected to the output of said filter circuit and connected to said electronic switch for holding said switch in one position when the output of each of said circuits are of substantially the same magnitude and for changing the position of said switch when one of said outputs exceeds in magnitude the output of another of said filter circuits by a predetermined amount.

9. The circuit described in claim 2 including also: a variable amplifier interposed in said conductor means; comparator means connected to the output of each of said filter circuits and controlling the magnitude of amplification of said amplifying means such that said amplifying means effects one ratio of amplification when said filter circuits are of substantially equal output and effects another ratio of amplification when the output of said filter circuits become unbalanced.

10. In an electrical optical system for reproducing a color photograph, the combination: means producing a pilot beam of polychromatic light, the intensity of said beam being non-constant with its intensity peaks occurring at a predetermined frequency; means providing a beam of monochromatic light of constant intensity constituting an exposing beam; an optical system gathering said beams into a single beam and directing same onto a single elemental area of a transparency and means causing said single beam to scan a plurality of elemental areas of said transparency; a light sensitive electric device; means holding light sensitive material; means directing a portion of the light passing through said transparency onto said light sensitive electric device and directing another portion of said light onto said light sensitive material; a frequency responsive filter circuit operatively associated with said light sensitive electric device and adapted to transmit only output impulses therefrom of said frequency; a light valve in the path of said monochromatic beam and means connecting the output of said filter circuit to said light valve.

11. A device for exposing light sensitive material from a colored original and effecting predetermined modifications from the colored characteristics thereof comprising the combination: means providing a beam of substantially monochromatic light and constituting an exposing beam; means providing an intermittent beam of polychromatic light and constituting a pilot beam, the intermittency thereof being of a predetermined frequency; means causing a beam of light comprising constituents from both of said sources to scan said colored original by elemental areas; a plurality of electrical light sensitive devices, said plurality being equal to the number of colors within said polychromatic beam, each sensitive to one and substantially only one of said colors; an optical system receiving one portion of the light emanating from said colored original as a result of said scanning beam falling thereon and directing same onto each of said light sensitive devices; a further optical system receiving another portion of the light emanating from said colored original as a result of said scanning beam falling thereon and directing same onto said light sensitive material; an electrically controllable light valve in the path of the exposing beam; a plurality of electrical filter circuits; said plurality being equal in number to the number of colors above mentioned; receiving respectively the output of each of said light sen-

sitive devices, each of said filter circuits being constructed to pass only impulses of said predetermined frequency; an electrically controllable light valve in the path of said exposing beam; a modulating circuit connecting each of said filter circuits selectively to said light valve.

12. A device described in claim 4 including also an electronic switch interposed between said color modulating section and said light valve; a second color modulating section connected in parallel with said first mentioned color modulating section between said filter circuit and said electronic switch whereby one color modulating section or the other thereof will control said light valve depending upon the position of said electronic switch; a target comprising a plurality of concentric electric conductors insulated from each other, the center one thereof being connected to hold said electronic switch in one position when same is energized and said electronic switch automatically assuming another position when said center conductor is deenergized, means directing a flow of electrons onto said target, and a plurality of control plates arranged about the normal path of said beam to cause same to strike said center conductor when, and only when, same are substantially uniformly charged, means imposing a charge onto each of said plates proportional to the intensity of the output of each filter circuit.

13. A device described in claim 4 including

also an electronic switch interposed between said color modulating section and said light valve; a second color modulating section connected in parallel with said first mentioned color modulating section between said filter circuit and said electronic switch whereby one color modulating section or the other thereof will control said light valve depending upon the position of said electronic switch; a target comprising a plurality of adjacent electric conductors insulated from each other, one thereof being connected to hold said electronic switch in one position when same is energized and said electronic switch automatically assuming another position when said center conductor is deenergized, means directing a flow of electrons onto said target, and a plurality of control plates arranged about the normal path of said beam to cause same to strike said one conductor when, and only when, same are substantially uniformly charged, means connecting the output of each filter circuit with one of said control plates for imposing a charge onto each of said plates proportional to the intensity of the output of each filter circuit.

References Cited in the file of this patent

UNITED STATES PATENTS

Number	Name	Date
2,309,048	Curry	Jan. 19, 1943
2,565,399	Simmon	Aug. 21, 1951