No. 621,051. Patented Mar. 14, 1899.

W. P. FEST.

CASKET HANDLER FOR HEARSES.

(Application filed Jan. 26, 1899.)

(No Model.) 2 Sheets—Sheet 1.

Fig. 1

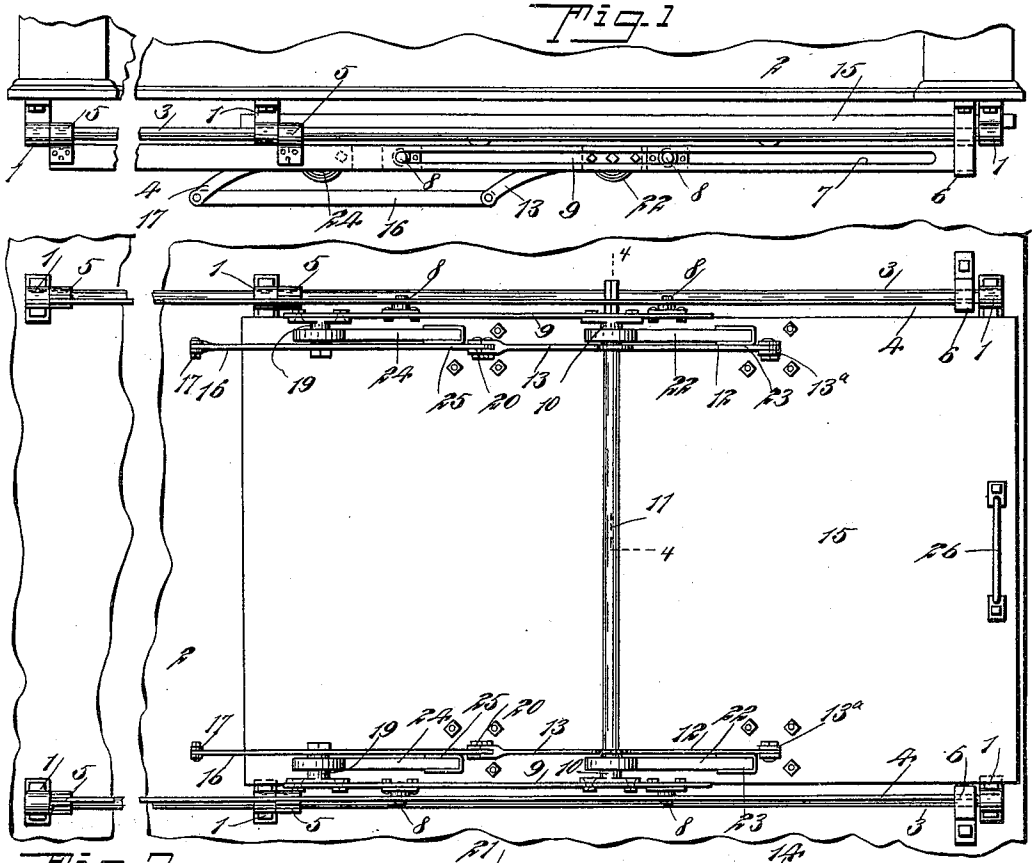

Fig. 2

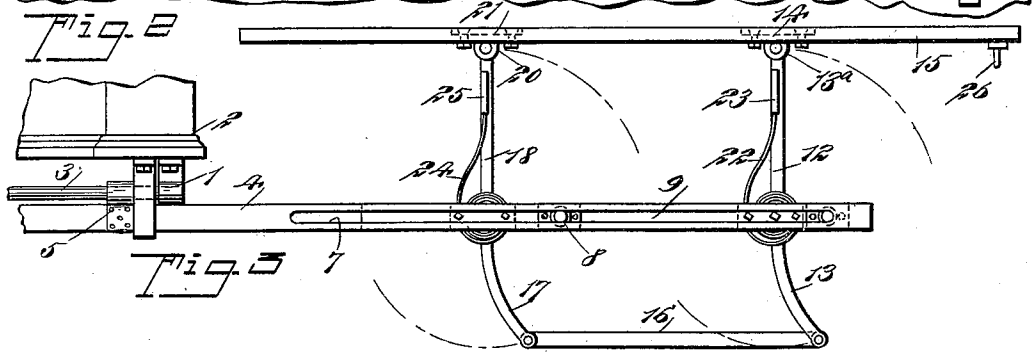

Fig. 3

WITNESSES:

J. A. Brophy

C. R. Ferguson

INVENTOR

William P. Fest

BY Munn & Co

ATTORNEYS.

THE NORRIS PETERS CO. PHOTO-LITHO., WASHINGTON, D. C.

No. 621,051. Patented Mar. 14, 1899.

W. P. FEST.

CASKET HANDLER FOR HEARSES.

(Application filed Jan. 26, 1899.)

(No Model.) 2 Sheets—Sheet 2.

Fig. 4

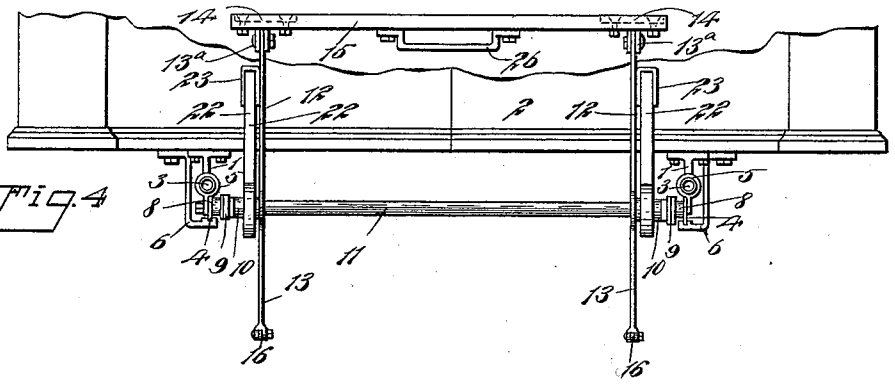

Fig. 5

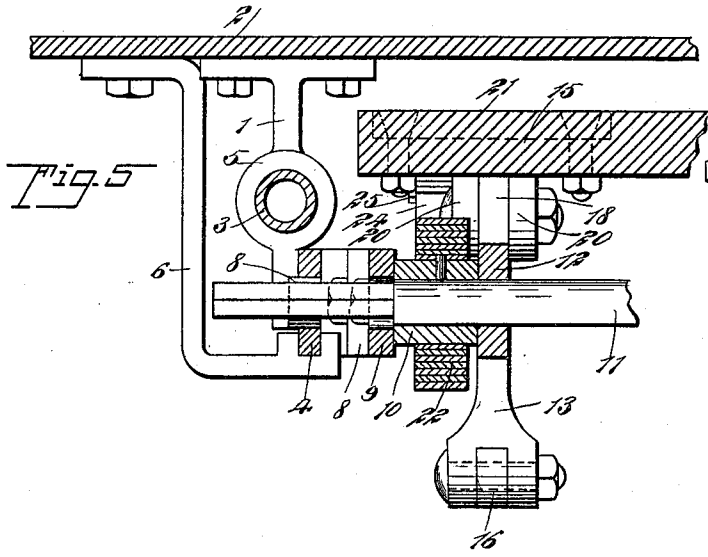

Fig. 6

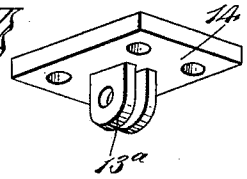

Fig. 7

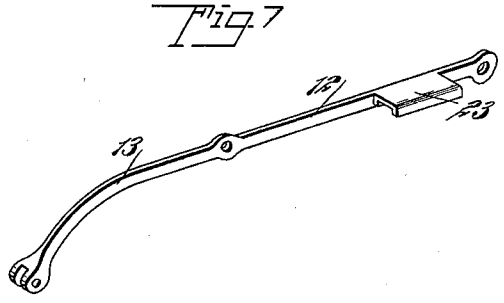

WITNESSES:

J. A. Brophy

C. R. Ferguson

INVENTOR

William P. Fest.

BY Munn & Co.

ATTORNEYS.

THE NORRIS PETERS CO., PHOTO-LITHO., WASHINGTON, D. C.

UNITED STATES PATENT OFFICE.

WILLIAM PAUL FEST, OF ROCHESTER, NEW YORK.

CASKET-HANDLER FOR HEARSES.

SPECIFICATION forming part of Letters Patent No. 621,051, dated March 14, 1899.

Application filed January 26, 1899. Serial No. 703,488. (No model.)

To all whom it may concern:

Be it known that I, WILLIAM PAUL FEST, of Rochester, in the county of Monroe and State of New York, have invented a new and Improved Casket-Handler, of which the following is a full, clear, and exact description.

This invention relates to improvements in devices for moving burial-caskets to and from hearses or the like; and the object is to provide a device for this purpose of simple construction designed as a permanent attachment to a hearse or similar vehicle and adapted to slide underneath the vehicle-body when not in use, and by means of which a person may easily lower the casket when removed from the vehicle, so as to place it within convenient reach of pall-bearers, and also to raise the casket to the level of the vehicle-floor for the purpose of loading.

I will describe a casket-handler embodying my invention and then point out the novel features in the appended claims.

Reference is to be had to the accompanying drawings, forming a part of this specification, in which similar characters of reference indicate corresponding parts in all the figures.

Figure 1 is a side elevation of a casket-handler embodying my invention and showing the same as attached to a vehicle. Fig. 2 is a bottom plan view thereof. Fig. 3 is a side elevation showing the device in operative position. Fig. 4 is a rear end view of the device adjusted for use. Fig. 5 is an enlarged detail view, partly in section and partly in elevation. Fig. 6 is a perspective view of a bearing-plate employed, and Fig. 7 is a perspective view of one of the operating-levers employed.

Mounted in hangers 1, secured to the bottom of the hearse-body 2, are guide-rails 3, preferably constructed of tubular steel, so as to secure lightness with a sufficient degree of strength. Mounted to slide relatively to the rails 3 are plates 4. The plates 4 are here shown as provided with sleeves 5, which engage around the rails 3 and are designed to slide thereon, and the plates 4 are also designed to slide in supporting-brackets 6, secured to the bottom of the vehicle-body at the rear end, these brackets 6 being substantially L-shaped. The plates 4 are longitudinally slotted, as at 7, and in these slots lugs 8 are designed to slide, these lugs being secured to bars 9. At one end of the bars 9 are bearing-blocks 10 for a rock-shaft 11, one end of said rock-shaft being extended outward and made angular in cross-section to be engaged by a suitable tool to operate the same.

Mounted rigidly on the rock-shaft 11 are levers 12, the upper portions of which have pivotal connection with lugs 13^a, attached to a bearing-plate 14, secured to a platform 15. The levers 12 have downwardly-extended portions 13, which are connected by links 16 with downwardly-extended portions 17 of levers 18, pivoted on lugs 19, secured to the bars 9. The upwardly-extended portions of these levers 18 have pivotal connection with lugs 20 on bearing-plates 21, secured to said platform 15. Springs 22 are coiled around the bearing-blocks 10 and have their ends secured to said bearing-blocks. The outer or free ends of said springs engage against offsets 23 on the levers 12, and similar springs 24 are secured at one end to the lugs 19 and bear at their free ends against offsets 25 on the levers 18. These springs 22 and 24 are designed to assist in the upward movement of the platform 15. In other words, they will be of sufficient strength to overcome or to a great extent offset the dead-weight of the casket and its contents, thus enabling a person to manipulate the platform with comparatively little exertion.

In operation the platform and the bars 4 and 9 are drawn outward or to the rear of the vehicle, a suitable handle 26 being provided in the rear end of the platform to be engaged by a person's hand. When the bars 4 are moved outward to their extreme limit, the bars 9, with the platform, are drawn rearward relatively to the bars 4. Then by placing a suitable crank on the extended end of the shaft 11 the platform may be elevated to receive the casket drawn from the hearse or to remove a casket from the platform into the hearse. Of course a reversed movement of the shaft 11 will lower the platform, so that the casket may be easily removed therefrom. When the platform is in its lowermost position, it will be in a plane below that of the bottom of a hearse or vehicle, so that the whole device may be moved under the hearse

or vehicle, as indicated in Fig. 1. The top of the platform 15 may be provided with suitable rollers upon which the casket may move. It is not deemed necessary, however, to show such rollers in the drawings.

Having thus fully described my invention, I claim as new and desire to secure by Letters Patent—

1. The combination with a vehicle, of guide-rods secured to the bottom of the vehicle, bars mounted to move on said rods, and a platform having swinging movement relatively to said bars, substantially as specified.

2. The combination with a vehicle, of guide-rods suspended from the bottom thereof, bars having sliding connection with said rods, a platform mounted to swing vertically with relation to the bars, and springs for assisting in the upward movement of said platform, substantially as specified.

3. The combination with a vehicle, of guide-rods supported on the bottom thereof, bars having sliding connection with said rods and the said bars being longitudinally slotted, other bars having lugs extended into said slots, levers mounted to swing relatively to said other bars, and a platform having pivotal connection with the upper ends of said levers, substantially as specified.

4. The combination with a vehicle, of guide-rods attached to the bottom thereof, bars having sliding connection with said rods, other bars having lugs extended into slots in the first-named bars, levers mounted to swing relatively to said other bars, link connections between downwardly-extended portions of the levers of a side, and a platform having pivotal connection with the upper ends of said levers, substantially as specified.

5. The combination with a vehicle, of guide-rods supported on the under side of the bottom thereof, bars having sliding connection with said rods, other bars having sliding connection relatively to the first-named bars, levers having swinging connection with said other bars, link connections between downwardly-extended portions of the levers, springs connected at one end to bearing-blocks on said other bars and having their free ends engaging with the upper portions of the levers, and a platform having pivotal connection with the upper ends of the levers, substantially as specified.

6. The combination with a vehicle, of guide-rods supported on the under side of the bottom thereof, bars having sliding connection with said rods, other bars having sliding connection with the first-named bars, a shaft having bearings in said other bars, levers having connection with said shaft, levers having swinging connection with lugs on said other bars, link connections between levers of a side, and a platform having pivotal connection with the levers.

7. The combination with a vehicle, of a casket-handler, comprising bars and a platform mounted to swing relatively to said bars, the said bars and platform being mounted to slide wholly underneath the vehicle, substantially as specified.

WILLIAM PAUL FEST.

Witnesses:
JOHN WARRANT CASTLEMAN,
ARTHUR W. BINGHAM.