March 5, 1929. R. MARX 1,704,620

LOOM

Filed Dec. 30, 1925 2 Sheets-Sheet 1

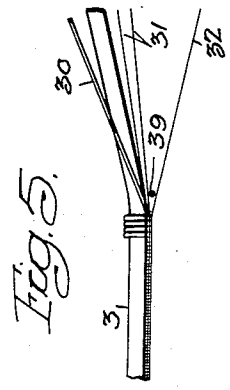

Fig. 5.

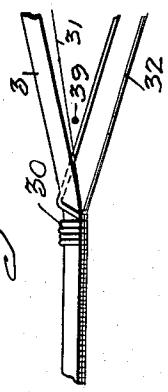

Fig. 6

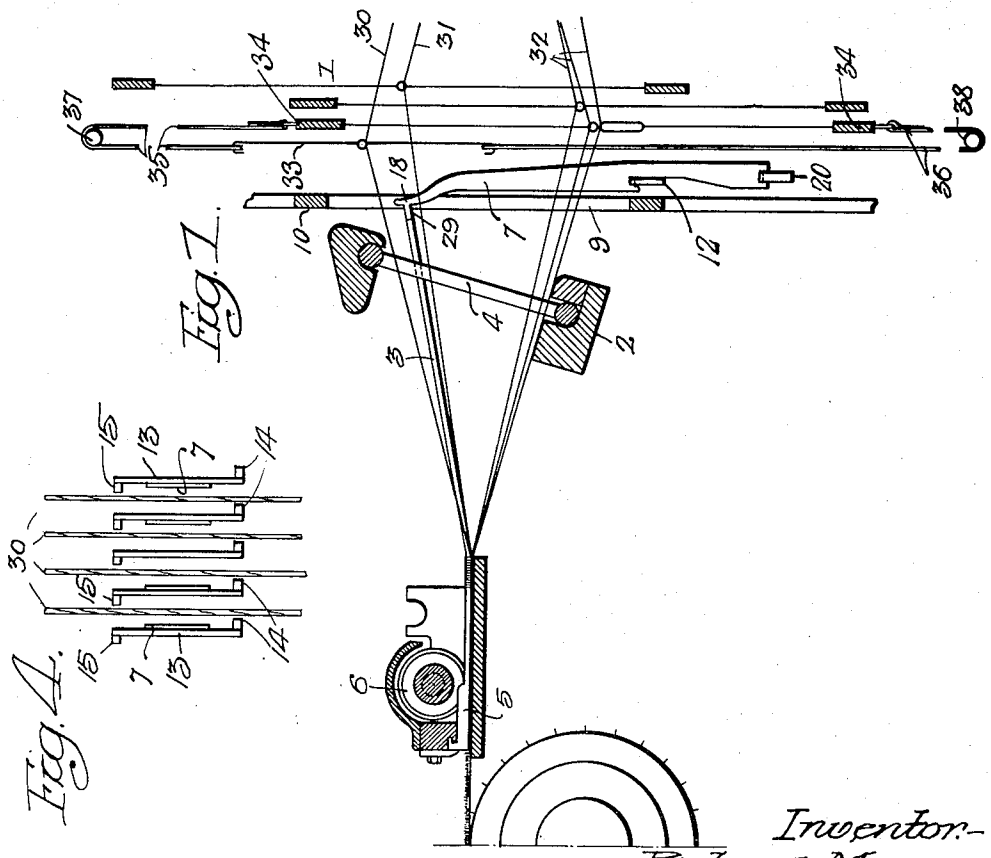

Fig. 1.

Fig. 4.

Inventor.-
Richard Marx
by his Attorneys:
Howson & Howson

March 5, 1929. R. MARX 1,704,620

LOOM

Filed Dec. 30, 1925 2 Sheets-Sheet 2

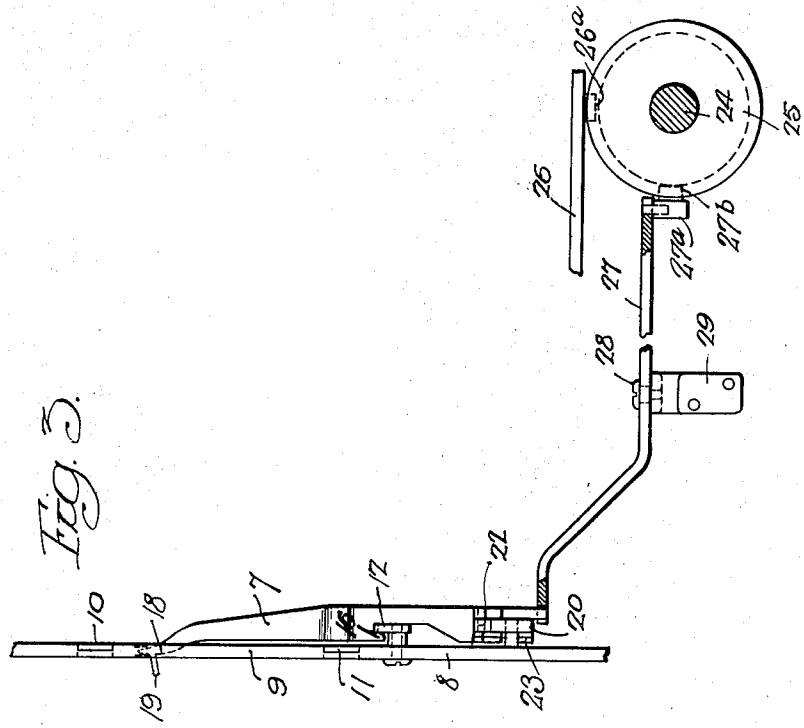

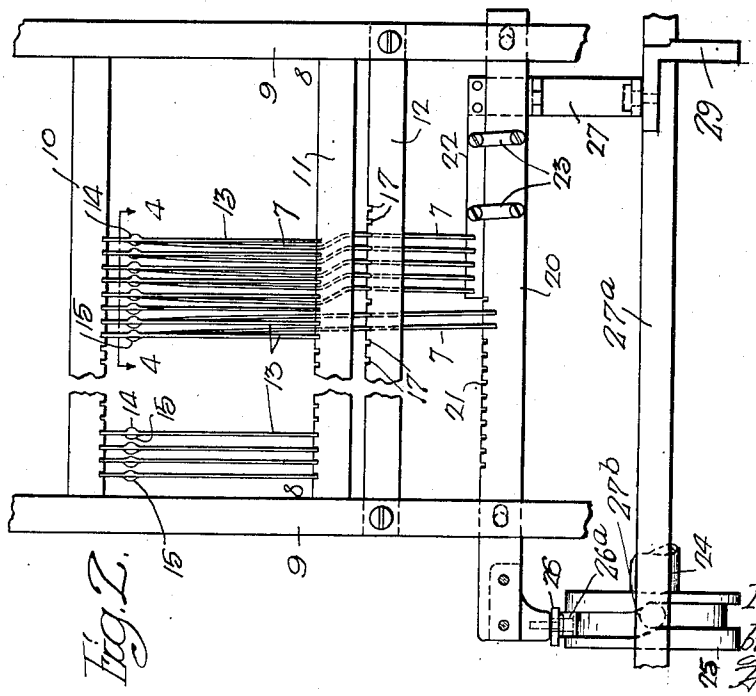

Inventor-
Richard Marx.
by his Attorneys
Howson & Howson

Patented Mar. 5, 1929. 1,704,620

UNITED STATES PATENT OFFICE.

RICHARD MARX, OF PHILADELPHIA, PENNSYLVANIA.

LOOM.

Application filed December 30, 1925. Serial No. 78,469.

This invention relates to looms for weaving pile fabrics, and more particularly to looms of the type employing pile wires arranged longitudinally of the fabric or in the direction of the warps.

The principal object of the invention is to provide means whereby the fabric is formed with a perfect selvaged edge at each side.

In the attached drawings:

Figure 1 is a semidiagrammatic longitudinal sectional view of a loom made in accordance with my invention, the showing being restricted to parts directly concerned in the invention and required for an understanding of the operation of the mechanism;

Fig. 2 is a sectional view showing in front elevation the frame which carries the wire-supporting blades together with the essential parts for actuating the blades;

Fig. 3 is a side elevation of the parts illustrated in Fig. 2;

Fig. 4 is a section on the line 4—4, Fig. 2;

Fig. 5 is a fragmentary view illustrating the relative positions of the pile wire and of the warps in one shed, and

Fig. 6 is a view corresponding to Fig. 5 illustrating the relative positions of the warps in the opposite shed.

With reference to the drawings, 1 designates the harness of the loom, 2 the lay, and 3 the pile wires which pass through the reed 4 and which have at their outer ends guides 5 for rotary cutters 6. The nature of the cutting means may vary largely, and has no part in the present invention.

The other ends of the pile wires 3 are respectively supported at the upper ends of upright blades 7 mounted in a frame 8 intermediate the harness and the lay. As shown in Fig. 2, this frame comprises two uprights 9, 9 and three horizontal cross bars 10, 11 and 12, the latter as shown in Fig. 3 being offset laterally from the frame. The bars 10 and 11 function to support a series of upright rods 13 corresponding in general with the reeds, the warp threads passing between and being separated by the rods which accordingly constitute vertical guides for the threads. As clearly illustrated in Figs. 2, 3 and 4, each of the rods 13 has near the upper end flanges 14 and 15 extending transversely from the front and rear edges of the rod and in opposite directions, these flanges being widest at their mid points and decreasing in width towards both top and bottom so as to merge not too abruptly into the sides of the rods.

The cross bar 12 constitutes both a support and a fulcrum for the blades 7. As shown in Fig. 3, the blades are provided intermediate their ends with a hook formation 16 which fits over the top of the bar 12, and the latter is shown in Fig. 2 as provided with a series of slots 17 in which the blades are seated, and these slots are so arranged that the blades occupy positions opposite the spaces between the rods 13. Also as previously described, the cross bar 12 is offset rearwardly from the frame so that only the inwardly offset and comparatively thin and flexible upper ends 18 of the blades lie between the guide rods 13. As shown in Fig. 3, the upper extremities of the blades lie opposite the flanges 14 and 15, and at a point immediately below the flanges each of the blades has a forwardly projecting tongue 19 to which the upper end of the associated pile wire is attached.

Mounted for longitudinal reciprocation on the frame 8 below the cross bar 12 is a beam 20, and the lower recessed ends of the majority of the blades 7 fit down over this beam and extend into transverse slots 21 therein whereby the longitudinal reciprocatory movement of the beam results in oscillation of the blades about their fulcrums on the bar 12.

As stated above, the majority of the blades 7 is pivotally connected with the beam 20. By reference to Fig. 2, it will be noted that a number of the blades on the extreme right-hand side have their lower portions offset and somewhat shorter than the others, and this series of blades is operatively connected with a second transversely reciprocatory and relatively short beam 22 mounted in the present instance upon the beam 20 and attached to the latter by links 23 which permit the required relative movement as hereinafter described. Both the beams 20 and 22 are shown actuated in the present instance from the main shaft 24 of the loom through the medium of a cam 25 on the shaft. The beam 20 is connected with the cam through an oscillatory lever 26 and a roller 26[a] thereon which directly engages the cam. The beam 22 is connected to the cam through a lever 27, pivoted in the present instance at 28

upon a bracket 29, and through a transversely reciprocatory bar 27[a] to which the lever 27 is pivotally connected and which carries a roller 27[b] directly engaging the cam. It will be noted, however, that the cam 25 is so formed that in a single revolution it gives the beams one full reciprocation, and the rollers 26[a] and 27[b] are set 90° apart in the cam groove so that the movement of one of the beams leads the other by a predetermined amount, for a purpose hereinafter described. As a result of this differential movement of the beams, the blades 7 connected with the respective beams are also oscillated differentially. In order to prevent contact between the lower ends of the two sets of blades, the lower ends of the blades engaged with the beam 22 may be offset away from the other blades, as shown in Fig. 2.

Although the number and character of the warp threads may vary widely according to the nature and desired characteristics of the fabric, I have for the purpose of illustration shown in the present instance a pile warp 30 and binder warps 31 and 32, the warp 31 being elevated and depressed in the shed-forming operation with the pile warp 30, although moving in an opposite phase to the warps 32.

The mode of operation of this type of loom is in general well known to those acquainted with the art. The heddles reciprocate oppositely to form the shed for passage of the shuttle or shuttles and the lay operates in the usual fashion to beat in the wefts or filler threads deposited by the shuttle. It is essential, however, in order that the pile warps may be reciprocated successively on opposite sides of the respective pile wires in the loop-forming operations, that these warps 30 be elevated to an extent greater than the binder warps and sufficiently high to permit the upper ends of the blades 7 to pass underneath the warps 30 in their movement between the guides 13. Since the pile warps are operated through the same harness that operates the binder warps, the travel of the warps 30, while the same in extent as the travel of the other warps terminates at both ends of its travel in points higher than the corresponding terminal positions of the warps 31 and 32. As a result of the discrepancy in the lower terminal positions of the warps, the shed is never as wide open when the warp 30 is down as when it is elevated. This will be readily understood by reference to Figs. 5 and 6, the first of which shows the shed formation when the pile warp is elevated, while Fig. 6 shows the shed with the pile warp down.

In looms of this type and with the pile warps all moving together in the same direction—which is the common operation—it will be apparent that when the shuttle moves in one direction the warp 30 is always elevated, and in the other direction always down. When the warp 30 is elevated the weft at that edge from which the shuttle moves lies close in against the formed fabric, as shown in Fig. 5, and when the weft is beaten in a tight and even selvage results. When, as shown in Fig. 6, the warp 30 is down, the weft thread 39 is prevented by the warp 30 from lying close against the formed fabric at that edge from which the shuttle has moved, and accordingly when the weft is beaten in there is formed at this edge a loose loop which with others similarly formed destroys the appearance of the selvage.

My present invention overcomes this fault by having the pile warp or warps adjacent each edge in elevated position when the shuttle is about to move from that side to the other. In other words, the pile warp or warps at that edge from which the shuttle moves, in each movement of the latter, occupies the elevated position, thereby insuring a tight selvage on both sides of the fabric. This I accomplish by controlling the pile warps immediately adjacent one edge by means of heddles 33 connected to the frames 34 of the normal harness by means of cords 35 and 36 attached to the top and bottom respectively of the frame 34 and extending over and under rollers 37 and 38, as shown in Fig. 1. Obviously as the frame 34 moves up and down the heddles 33 are oppositely reciprocated.

This differential movement of a number of the pile warps requires a cooperative movement of the blades 7, and this is obtained through the medium of the reciprocatory beams 20 and 22, previously described, it being understood that the number of the blades connected with the beam 22 correspond in number and position with those of the pile warps controlled by the heddles 33. Since the blades 7 are shifted when the pile warps are elevated, and since the warps in the heddles 33 are up when those in the frames 34 are depressed,—and vice versa,—it obviously becomes necessary to shift the blades associated with one set of pile warps earlier or later, as the case may be, than the blades associated with the other set of pile warps, and this is accomplished by connecting the beams 20 and 22 to the operating cam in the manner previously described. The movement of the harness and of the blades 7 is so timed that the lag of one set of blades behind the other corresponds with the time required for the harness to move from one position to the other.

From the foregoing description, the mechanism and its operation will be readily understood by those acquainted with the art. The improvement is a material one, and, by

insuring a perfect selvage at both sides of the woven fabric, overcomes a previous serious objection to this type of loom.

It will be understood that there may be considerable modification in the manner of accomplishing the desired end and in the mechanism herein described and illustrated.

I claim:

1. In a loom, the combination with a plurality of warp-wise pile wires, of mechanism for vertically reciprocating a corresponding number of pile warps including means for obtaining an opposite reciprocation of the warps at the opposite sides of the loom, whereby in each pass of the shuttle the pile warp on the side from which the shuttle enters may be in an elevated position and mechanism for transversely and cooperatively reciprocating the wires across the paths of the pile warps whereby the latter are successively reciprocated on opposite sides of their respective wires.

2. In a loom, the combination with a plurality of transversely movable warp-wise pile wires, of mechanism for vertically reciprocating a corresponding number of pile warps including means for obtaining an opposite reciprocation of the warps at opposite sides of the loom, whereby in each pass of the shuttle the pile warp on the side from which the shuttle enters may be in an elevated position and mechanism for transversely reciprocating the pile wires across the path of the said warps and cooperatively with the movement of the latter whereby the warps are successively reciprocated on opposite sides of their respective wires.

3. In a loom, the combination with a plurality of transversely movable warp-wise pile wires, of a corresponding number of pile warps, mechanism for vertically reciprocating the pile warps including means for obtaining an opposite reciprocation of the warps at the opposite sides of the loom, whereby in each pass of the shuttle the pile warp on the side from which the shuttle enters may be in an elevated position and mechanism for transversely moving the pile wires cooperatively with the movement of said warps including independently movable actuating elements for the two groups of pile wires corresponding with the two groups of oppositely reciprocated warps.

4. In a loom, the combination with a plurality of transversely movable warp-wise pile wires, of a corresponding number of pile warps, mechanism for vertically reciprocating the pile warps including means for obtaining an opposite reciprocation of the warps at the opposite sides of the loom, whereby in each pass of the shuttle the pile warp on the side from which the suttle enters may be in an elevated position mechanism for transversely moving the pile wires cooperatively with the movement of said warps including independently movable actuating elements for the two groups of pile wires corresponding with the two groups of oppositely reciprocated warps, and mechanism including a single cam operatively connected with both of said elements for actuating the latter.

5. The method for obtaining uniform selvages in looms employing warp-wise pile wires, which consists in oppositely vertically reciprocating the pile warps at the opposite sides of the loom in the shed-forming operations correspondingly relatively moving the warps and the individually associated wires transversely to form the pile loops on the wires, and feeding the weft in each instance from that side at which the pile warp then occupies the elevated position.

6. In a loom, the combination with a plurality of warp-wise pile wires, of means for relatively moving a series of warp threads both vertically and transversely with respect to the said wires and for tying in the warps to form a series of loops passing over the wires, and means whereby the said vertical movement of the warps at the opposite sides of the machine is in opposite directions whereby in each pass of the shuttle the pile warp on the side from which the shuttle enters may be in an elevated position.

7. In a loom, the combination with a plurality of warp-wise pile wires, of means for vertically reciprocating a series of warp threads and for transversely relatively moving the warps and the said wires so that the successive vertical movements of the warps are on opposite sides of the wires, means for tying in the warps so that in said movements a series of loops is formed on the respective wires, and means whereby the said vertical movements of the warps at the opposite sides of the machine are in opposite directions whereby in each pass of the shuttle the pile warp on the side from which the shuttle enters may be in an elevated position.

RICHARD MARX.