(No Model.)

D. A. GABAY.

FOLDING SPONGE BASKET.

No. 354,697. Patented Dec. 21, 1886.

Fig. 1.

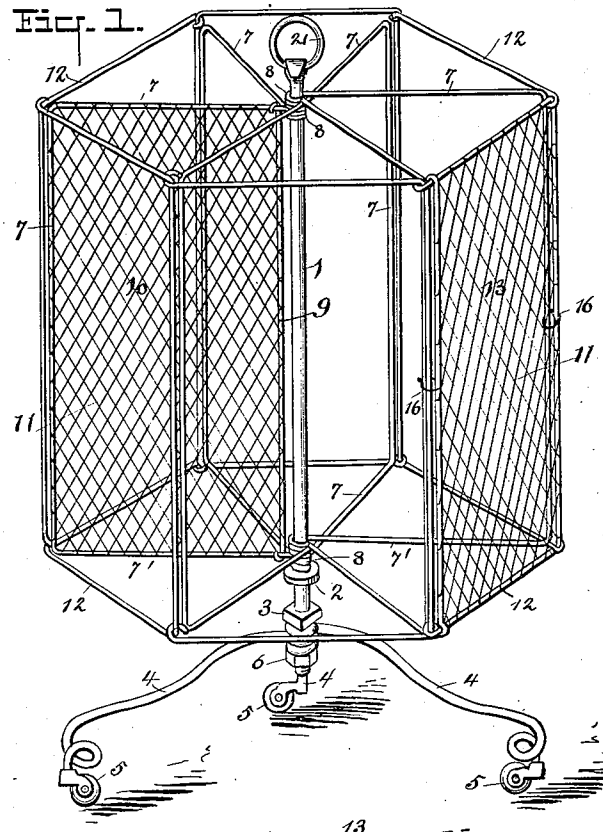

Fig. 2.

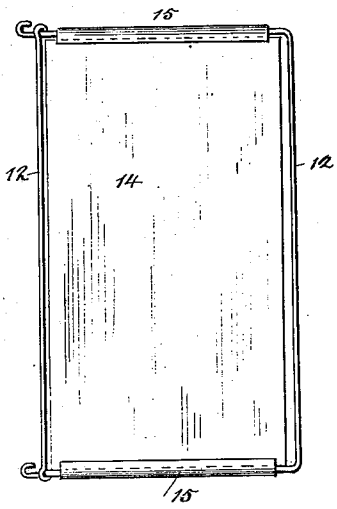

Fig. 3.

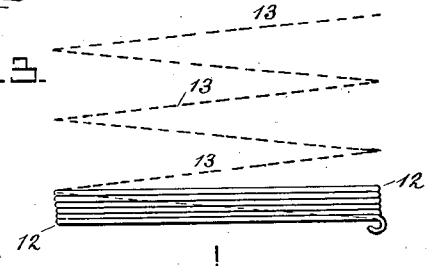

Fig. 4.

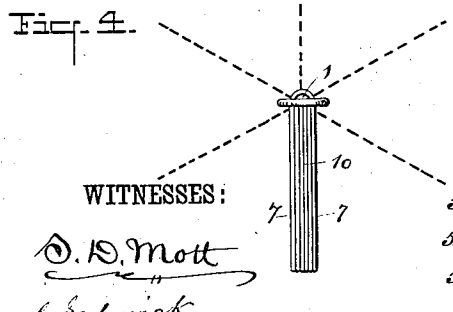

Fig. 5.

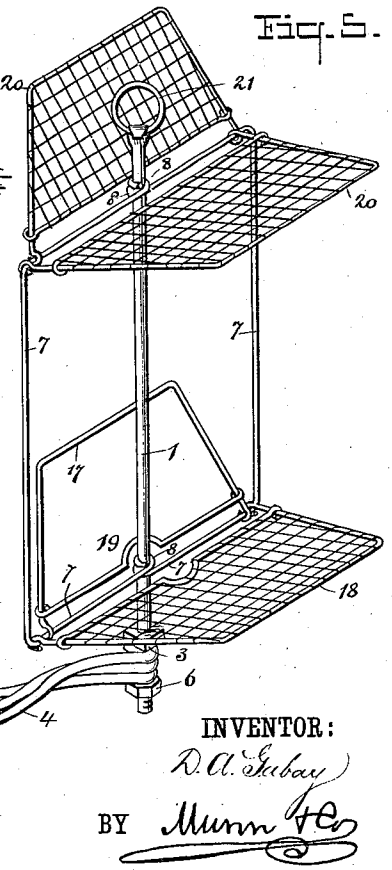

WITNESSES:

D. D. Mott

G. Sedgwick

INVENTOR:

D. A. Gabay

BY Munn & Co

ATTORNEYS.

UNITED STATES PATENT OFFICE.

DAVID A. GABAY, OF NEW YORK, N. Y., ASSIGNOR TO McKESSON & ROBBINS, OF SAME PLACE.

FOLDING SPONGE-BASKET.

SPECIFICATION forming part of Letters Patent No. 354,697, dated December 21, 1886.

Application filed October 15, 1886. Serial No. 216,330. (No model.)

To all whom it may concern:

Be it known that I, DAVID A. GABAY, of the city, county, and State of New York, have invented a new and Improved Folding Sponge-Basket, of which the following is a full, clear, and exact description.

My invention relates to baskets for holding sponge, and has for its object to provide a number of circularly-arranged compartments elevated from the floor, adapted to revolve around a central fixed standard; and my object is also to provide a sponge-basket in which the various parts constituting the same are made detachable, whereby the entire structure may be compactly folded for shipment.

The invention consists in the construction and combination of the several parts, as will be hereinafter fully set forth, and pointed out in the claims.

Reference is to be had to the accompanying drawings, forming a part of this specification, in which similar letters of reference indicate corresponding parts in all the figures.

Figure 1 is a perspective view of the basket having most of the panel-work removed, and Fig. 2 is a modified form of a panel. Fig. 3 illustrates the mode of folding the outer series of panels for shipment, and Fig. 4 a plan view of the partitions folded around the central standard for the same purpose. Fig. 5 illustrates the method of folding the legs of the basket, also the attachment of the hinged covers and the bottom-sections.

In the construction of my sponge-basket a round vertical standard, 1, is provided, having secured thereon, near its base, a plate, 2. At a proper distance below said plate 2 a nut, 3, is secured, and from this point to the base the standard 1 may be threaded.

Below the nut 3 three or more outwardly-curved rods, 4, are secured, to turn upon the central standard, 1, the one being arranged below the other in such a manner as to fold together in substantially the same plane as shown in Fig. 5. The outer ends of the said curved rods 4 are usually bent around upon themselves, and then vertically downward to a connection with suitable casters, 5. To prevent the curved rods 4 from slipping from the vertical standard 1, a second lower nut, 6, is secured thereon, and when the said curved rods are made to extend outward in different directions, and are thus secured by the said lower nut, 6, they constitute legs or supports for the entire basket.

Upon the vertical standard 1, thus supported, rectangular frames 7, preferably six in number, of stout iron, brass, or copper wire, provided with upper and lower eyes, 8, are alternately entered, so that one eye of the first frame introduced will bear upon the aforesaid plate 2 and the other eye encircle the standard 1, near the upper portion thereof, the eyes of the remaining frames 7 being arranged in proper order above the top and bottom eyes of the first frame in position.

To provide each frame 7 with an independent rectangular panel or partition, 10, a vertical rod, 9, is made to extend parallel with and a slight distance from the central standard 1, between each upper and lower bar of the said frames, and engage the said bars by being bent over thereon, as shown, or otherwise. The several hinged frames 7 are now provided with a net-work of wire, 11, whereby the partitions are completed, as shown in Fig. 1.

The next step in the construction of my basket is to provide an outer casing. This I accomplish by hinging together, at their top and bottom ends, wire rods 12, having their ends bent over at right angles thereto until about six continuous sections have been formed. Each section is then formed into a panel, 13, by a cross-hatching of light wire, 11, between the frames, as shown in Fig. 1, or the introduction of a glass pane, 14, through clamps 15 at top and bottom, as shown in Fig. 2. The panels 13 are now arranged around the central standard, 1, and the partition-frames 7, the said partition-frames being made to radiate from said standard and intersect the several angles of the hinged panels 13, which partition-frames 7 are secured in said angles by a lacing of wire, 16, or other suitable means. The outer panels are thereupon ordinarily united by clinching the top and bottom bars of the one over the vertical sides of the other.

A bottom, in two sections, 17 and 18, also cross-hatched with light wire, is provided for the basket, the said sections being detachably attached to opposite lower horizontal bars of the frame. A concave, 19, is formed in each sec-

tion to receive the plate 2 upon the standard 1; and, to complete the basket, two top lids, 20, are provided, adapted to fold upward upon each side of the central standard, 1, both of said lids being hinged to the same opposite horizontal top bars of the partition-frame 7. Any form of handle, 21, may be used best adapted to the purpose.

When outer glass panels are provided the basket, the lids thereof, instead of being covered with wire-work, will be furnished with glass panes also. Thus I produce a revolving partitioned basket, preferably made polygonal in shape, capable of displaying and holding a variety of sponge in a convenient and compact manner, which, in shipping, admits of each part being detached and the entire basket made up in a comparatively flat package, whereby a number packed together occupy but a limited space. This is done in substantially the folllowing manner: One of the outer sections or panels is detached from its fellow and the lacing binding the remainder to the partition-frames 7 and bottom undone. The said outer panels are thereupon folded one upon the other, as shown in Fig. 3. The bottom and lids are now detached and placed with the outer panels. The hinged partitions are then brought together, as shown in Fig. 4, and, finally, the bottom nut, 6, is loosened upon the standard 1, thus permitting the legs 4 to fold in substantially the same plane as in Fig. 5. This flat parcel is placed upon the other folded and detached portions of the basket and the whole bound together.

Having thus described my invention, what I claim as new, and desire to secure by Letters Patent, is—

1. In a sponge-basket, the combination, with a central standard, 1, having legs 4 loosely hinged at one end, and means for tightening said legs, of a series of partitions, 10, hinged to said standard, adapted to radiate therefrom, an outer series of detachably-hinged panels, 13, the divided detachable hinged top 20, and removable bottom-sections 17 and 18, substantially as shown and described, whereby the said basket is divided into a number of vertical compartments and made to revolve around the central standard, as set forth.

2. In a sponge-basket, the combination, with a central standard, 1, having legs 4 hinged thereto, adapted to fold together in the same plane, and a series of partitions, 10, hinged above said legs, adapted to fold one against the other, of an outer casing of hinged detachable folding panels, 13, the removable bottom-sections 17 and 18, and detachable hinged covers 20, substantially as shown and described, whereby the entire basket can be knocked down and folded in a limited space, as set forth.

DAVID A. GABAY.

Witnesses:
J. F. ACKER, Jr.,
EDWD. M. CLARK.