May 13, 1952 T. H. JOHNSON ET AL 2,596,246

APPARATUS FOR PRODUCING TEXTILE FABRICS

Filed Aug. 16, 1949

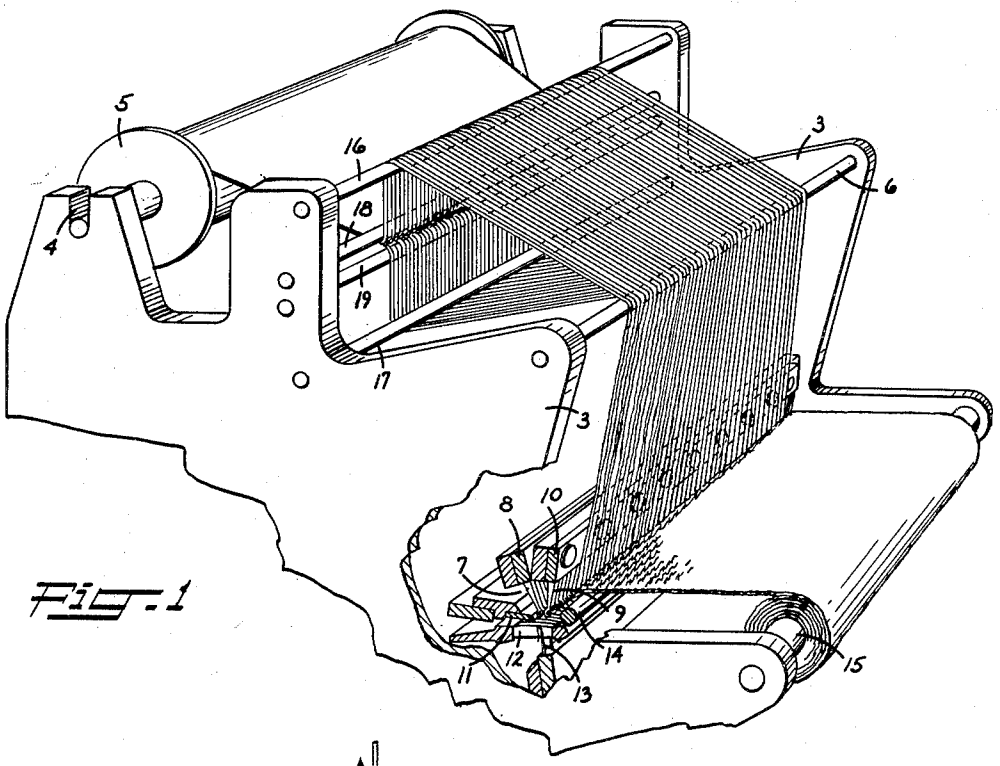

Fig. 1

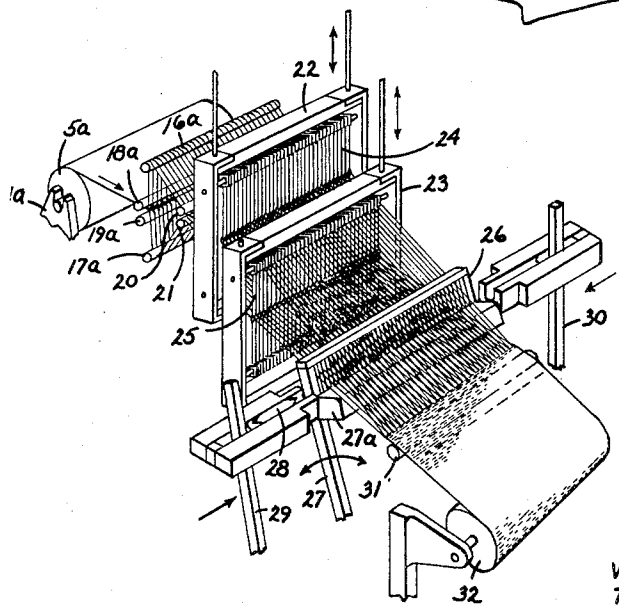

Fig. 2

INVENTORS.
WIRT L. THOMPSON, JR.
THOMAS R. JOHNSON

BY Thomas R. O'Malley

ATTORNEY.

Patented May 13, 1952 2,596,246

UNITED STATES PATENT OFFICE

2,596,246

APPARATUS FOR PRODUCING TEXTILE FABRICS

Thomas H. Johnson, Elmhurst, N. Y., and Wirt L. Thompson, Jr., Fairfield, Conn., assignors to American Viscose Corporation, Wilmington, Del., a corporation of Delaware

Application August 16, 1949, Serial No. 110,632

16 Claims. (Cl. 28—1)

1

This invention relates to methods and apparatus for the conversion of the components which are splittable from a warp-knit fabric, made as disclosed in the patent of Thomas H. Johnson 2,433,279, into textile fabrics, such as by weaving, knitting, and the like.

The Johnson Patent 2,433,279 discloses the production by warp knitting of fabrics which can subsequently be ripped or split at predetermined wales into narrow strips or bands. Each of such component fabrics which are thus split out comprises a main body which may have from one to four or more wales from the edges of which a plurality of loops project. In our copending application Serial No. 62,606, filed November 30, 1948, now Patent No. 2,552,680, we have disclosed a method and apparatus for splitting the integral fabric of the Johnson patent and we there disclosed the conversion of the split components into woven, knitted, or other textile fabrics.

In accordance with our present invention, we provide an improved method and a modified machine for concurrently splitting such an integral fabric into its components and fabricating the components directly into a textile structure. A more specific object is to provide a method of splitting such a fabric and directly converting the components thereof into a woven fabric or a knitted fabric as components of the warp thereof. A more specific object of the invention is to provide a loom adapted to support a beam carrying the integral fabric in the position of the usual warp supply beam and to split the fabric unwound from the beam into its components and then to pass the components to the fabricating mechanism of the loom. Another specific object is to provide a knitting machine adapted to support a wound roll of integral fabric and to feed the integral fabric to splitting means and then to the knitting elements thereof where the components are converted into a knitted fabric. Other objects and advantages of the invention will be apparent from the drawing and description thereof hereinafter.

In the drawing, which is illustrative of the invention, Figure 1 is a perspective view of a knitting machine in accordance with the invention, and

Figure 2 is a perspective view of a loom in accordance with the invention, conventional parts being shown somewhat diagrammatically.

In general, the invention comprises the mounting of a roll of splittable fabric of the type produced in the Johnson Patent 2,433,279 for unwinding, as in a loom or other textile fabricating

2

machine, passing the fabric as it unwinds from the roll through a device for splitting component sections from the fabric, and thereafter passing the split components to the fabricating mechanism of the machine. The split components are used to form the warp or part thereof in the fabric when it is woven or to take the place of either one, several, or all of the warp supplies of a warp-knitting machine, such as the tricot or Raschel type knitting machines. The several component strips split from the fabric roll may also be converted in any type of flat knitting machine other than tricot, Raschel, or warp-knitting machine, and the components may even serve as the supply for a circular knitting machine or a braiding machine. The split components derived from the integral fabric serve as individual yarns and most conveniently as the warp yarns in looms or warp-knitting machines, but they may be the source of supply of any part or all of the yarns used in other textile fabricating machines, such as braiding machines, machines for forming netted or knotted fabrics, etc.

Figure 1 shows the application of the invention to a knitting machine, and particularly a warp-knitting machine. As shown, the machine comprises the end frames 3 containing suitable bearings or supports 4 for a beam or roll 5, upon which the wound splittable fabric is carried. The beam 5 may be positively driven, either continuously or intermittently, or it may be allowed to rotate under the influence of the knitting elements as they draw upon the components in making the fabric. Conventional braking or drag devices may also be provided to control the let-off from the beam 5. In warp-knitting machines, the yarns from one or more warp supplies proceed about suitable guides and about one or more tension rods disposed above the knitting elements or "insides" of the machine where the fabric is formed. In the type of machine shown in Figure 3, the warp yarns proceed over a tensioning guide rod 6 or over one or more equivalent tension rods which may be spring controlled as is conventional in the art, and then down to the knitting elements comprising the guides 7 carried in the back guide bar 8, the guides 9 in the front of guide bar 10, the presser bar 11, the sinkers 12, and the needles 13. From the knitting elements, which are driven from cams or eccentrics on the main cam shaft of the machine as is conventional, the fabric formed passes over a guide rod 14 to the take-up roll 15 which is suitably driven by conventional means not shown.

In the present knitting machine, there is pro-

vided between the warp supply 5 and the tension means 6, means for splitting the splittable fabric withdrawn from the beam 5. This means may consist simply of the set of four rods, 16, 17, 18 and 19, which extend transversely of the machine in front of the supply beam 5, generally parallel to the axis of the supply beam. Preferably, two of the rods, 18 and 19, are spaced apart rather closely to provide a narrow passage through which the splittable fabric is passed and the other two rods, 16 and 17, are fairly widely spaced apart, one on either side of the first two rods. As shown, the rods of each pair are vertically superimposed though this is not essential. They may, if desired, be offset in a horizontal plane or at any angle between the horizontal and the vertical. If desired, the rods 16 and 17 may be in the same plane as rods 18 and 19, or they may be offset from such plane by a considerable distance, either backward or forward therefrom. Preferably, the rods 16 and 17 are spaced, as shown, somewhat forward of the first pair of rods since this facilitates lacing.

The splitting action is readily seen in the drawing and involves the passing of alternate components split from the fabric in opposite directions, one set of components being passed around rod 18 and then around rod 16, whereas the other set is passed downwardly around rods 19 and then 17. As shown in Figure 1, the separated components proceed about a common tensioning guide 6 but, if desired, each separated group of yarn-like components may be passed over separate tensioning rods. Also, one set of alternate components may be passed through the guides 7 and the other set through the guides 9, or all of them may be passed through either the front or the back set of guides to form a single bar fabric. While the machine illustrated shows only two guide bars, the splitting means may be provided on machines having one, three, or more guide bars and the yarn-like components may be distributed as desired among the several guide bars in accordance with the requirements of any particular fabric designed.

In Figure 2, a loom is diagrammatically shown in which the splitting device comprising rods 16*a*, 17*a*, 18*a* and 19*a* is disposed in front of the supporting means 4*a* for the warp beam 5*a* which carries a roll of splittable fabric instead of the usual beam of individual warp yarns. The yarn-like components split from the fabric proceed from the splitting device between the two rods or rollers 20 and 21 which bring the two sets of components back into proximity and then the components proceed through suitable harness which may comprise the two frames 22 and 23, each containing the heddles 24 and 25. These frames are alternately reciprocated in opposite directions to form the shed between the two sets of warp yarns as is conventional. From the harness, the yarns pass through the reed 26 which is mounted on an oscillating frame 27, known as the lay, which also carries the race 27A over which a shuttle 28 is traversed through the shed formed by the two sets of warp yarns. The propulsion of the shuttle is achieved by the striking actions of the picker sticks 29 and 30. The fabric formed proceeds over a roll 31 to the take-up 32 which may be driven in conventional fashion.

The present invention provides a simple and effective procedure for converting yarn-like components of a splittable fabric directly into a textile fabric structure in a single operation. For this purpose, a roll of the splittable fabric is directly mounted as the supply of a textile fabricating machine and the integral fabric withdrawn from the roll is split into its components which serve as warp yarns or the like in the subsequent fabricating operations of the machine. By this system, handling by operators separately (1) splitting the fabric, (2) winding the split components into a roll or separate bobbins, and (3) finally converting the components into fabrics is greatly reduced with a consequent saving in labor-, machine-, and space-requirements.

In forming fabrics from the warp-knit components by the methods and means disclosed hereinabove, the warp-knit components may be combined with ordinary yarns of any material whatsoever in any desired relationship. Thus in a loom, the warp may be derived from several warp supply beams, any one or more or all of which beams may comprise a wound roll of splittable warp-knit fabric, whereas the remaining supplies may be of ordinary yarns. When a mixed-warp fabric is produced in this fashion, the ordinary yarns may be alternated with an equal number of the warp-knit split component structures or each end of ordinary yarn may be alternated with two, three or any number of warp-knit, split components, either in a regular alternation or in a pattern alternation of more or less irregularity. Similarly, in knitting or otherwise fabricating a textile structure, a roll of splittable warp-knit fabric may be used with one or more rolls of ordinary yarns. Thus in forming three-bar tricot fabrics, one warp supply may be derived from a splittable warp-knit fabric, whereas the others may be derived from ordinary yarns. If desired, instead of, or in addition to, combining the ordinary yarns with the split components of a warp-knit fabric, the split components of another style or pattern of warp-knit fabric may be used. By appropriate variations of this type, a wide variety of fabrics can be obtained. The fabrics are extremely attractive and can be adapted to all sorts of uses, particularly in the upholstery, drapery, and clothing fields. The ordinary yarns may be of cotton, silk, wool, rayon of the cellulose acetate type or regenerated cellulose type, nylon, casein, resins, copolymers of vinyl chloride with vinyl acetate, acrylonitrile, as well as other copolymers of acrylonitrile. The warp-knit components may be of the same or different materials.

It is to be understood that changes and variations may be made without departing from the spirit and scope of the invention.

We claim:

1. A machine for fabricating textile structures comprising means for supporting a wound supply roll of a warp-knit fabric splittable in a longitudinal direction, means adjacent the supply for splitting such fabric into its components, and means comprising relatively movable elements for fabricating the split components into a textile structure.

2. A machine in accordance with claim 1 in which the splitting means comprises spaced rods between which the fabric is passed and additional spaced rods around which alternate split components are passed.

3. A loom for weaving textile fabrics comprising the structure defined in claim 1.

4. A knitting machine comprising the structure defined in claim 1.

5. A warp-knittting machine comprising the structure defined in claim 1.

6. A machine for fabricating textile structures

comprising means for supporting a wound supply roll of a warp-knit fabric splittable in a longitudinal direction, means adjacent the supply for splitting such fabric into its components, and means comprising relatively movable elements for fabricating the split components into a textile structure, said splitting means comprising a pair of spaced rods extending transversely of the machine in advance of the roll supporting means and providing a narrow passage therebetween for the fabric and a second pair of guide rods each of which is disposed on opposite sides of the first-mentioned rods.

7. A loom for weaving textile fabrics comprising the structure defined in claim 6.

8. A knitting machine comprising the structure defined in claim 6.

9. A warp-knitting machine comprising the structure defined in claim 6.

10. A machine in accordance with claim 6 in which the rods extend transversely of the machine in a direction generally parallel to the axis of the supply roll.

11. A loom for weaving textile fabrics comprising the structure defined in claim 10.

12. A knitting machine comprising the structure defined in claim 10.

13. A machine for fabricating textile structures comprising supply means adapted to receive a wound roll of a warp-knit fabric splittable in a longitudinal direction, means adjacent the supply means for splitting such fabric into its components, and means comprising relatively movable elements for fabricating the split components into a textile structure, said splitting means comprising spaced rods between which the fabric is passed and additional spaced rods around which alternate split components are passed, said rods extending transversely of the machine in a direction generally parallel to the axis of the supply roll.

14. A loom for weaving textile fabrics comprising the structure defined in claim 13.

15. A knitting machine comprising the structure defined in claim 13.

16. A warp-knitting machine comprising the structure defined in claim 13.

THOMAS H. JOHNSON.
WIRT L. THOMPSON, JR.

REFERENCES CITED

The following references are of record in the file of this patent:

UNITED STATES PATENTS

Number	Name	Date
1,769,970	Silverman	July 8, 1930
2,064,074	McNamee	Dec. 15, 1936
2,169,886	Shaw	Aug. 15, 1939
2,433,279	Johnson	Dec. 23, 1947
2,499,888	Taylor	Mar. 7, 1950