Sept. 20, 1949. R. R. DULONG 2,482,161

GOVERNOR

Filed July 17, 1944 2 Sheets-Sheet 1

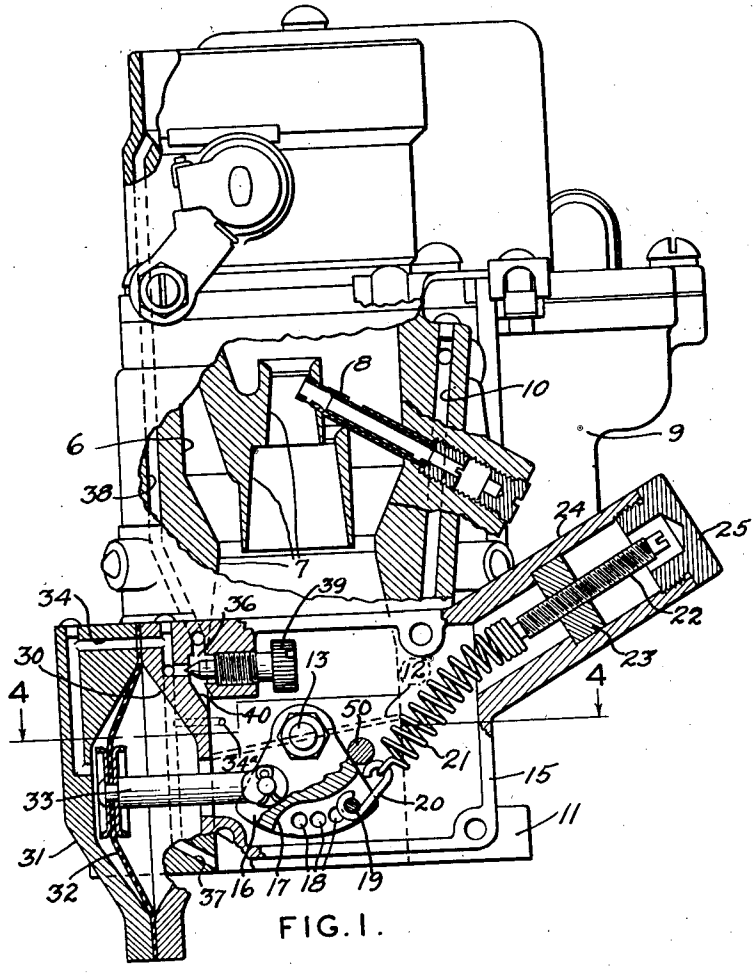

FIG. 1.

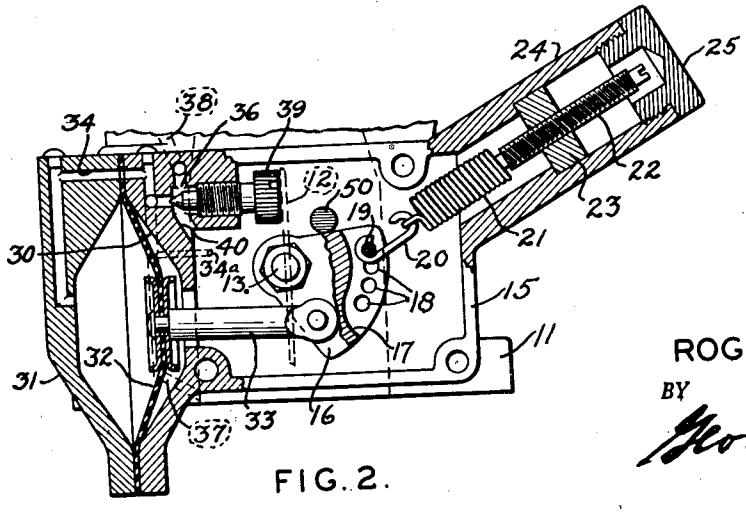

FIG. 2.

INVENTOR.
ROGER R. DULONG

BY George R. Erion
ATTORNEY.

Sept. 20, 1949. R. R. DULONG 2,482,161

GOVERNOR

Filed July 17, 1944 2 Sheets-Sheet 2

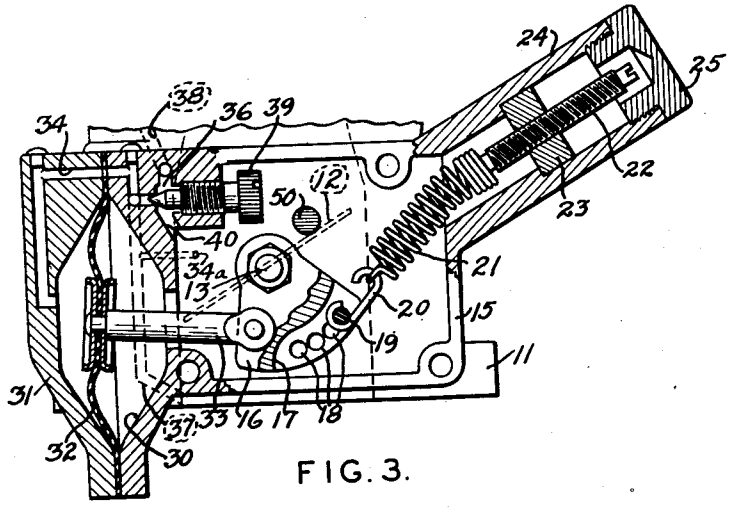

FIG. 3.

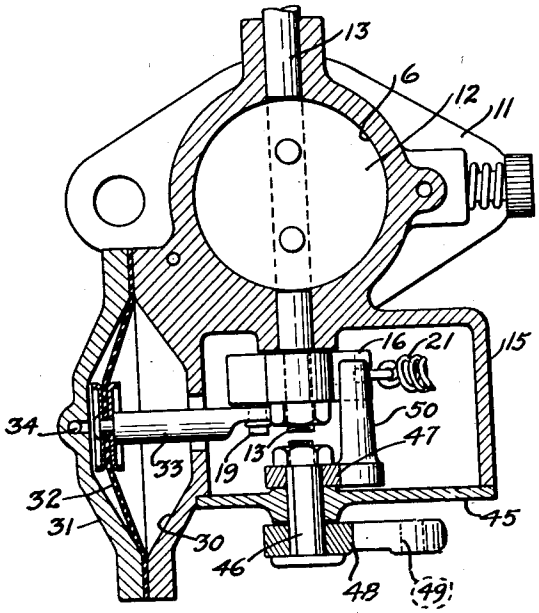

FIG. 4.

INVENTOR.
ROGER R. DULONG
BY
George R. Erickson
ATTORNEY.

Patented Sept. 20, 1949

2,482,161

UNITED STATES PATENT OFFICE

2,482,161

GOVERNOR

Roger R. Dulong, Grosse Pointe Farms, Mich., assignor to Carter Carburetor Corporation, St. Louis, Mo., a corporation of Delaware

Application July 17, 1944, Serial No. 545,344

10 Claims. (Cl. 137—153)

1

This invention relates to governors for internal combustion engines and consists particularly in a novel governor of the static pressure type which incorporates new and effective means to counter-balance the action of the suction device in every position of the valve so as to maintain the governed speed substantially constant under all load conditions.

The difficulty with static pressure governors in the past has been that the governed speed varies considerably under load and no load conditions. This is because the counter-balancing means is not wholly effective. Furthermore, the attempts to obtain perfect counter-balancing of the valve at all speeds and loads have resulted in rather complicated and expensive devices. Also, the adjustment of prior devices to conform to different engine requirements has not been wholly satisfactory.

An object of the present invention is to provide a governor of the static pressure type having effective means for counterbalancing the suction device at all speeds and under all load conditions.

Another object is to provide a simplified governor for internal combustion engines.

Another object is to provide simple and effective means for adjusting the governor in accordance with various engine requirements.

These objects and other more detailed objects hereafter appearing are attained by the device illustrated in the accompanying drawings in which

Fig. 1 is a side view, partly sectioned, of an automotive carburetor having the novel governor applied thereto, the combination governing valve and throttle being shown closed and the cover of the governor box being removed.

Fig. 2 is a similar view showing the lower part of the carburetor only, with the governing valve wide open.

Fig. 3 is a view similar to Fig. 2, but showing the governing valve in an intermediate position.

Fig. 4 is a horizontal section taken substantially on line 4—4 of Fig. 1, with the box cover in position.

The carburetor in the figures includes a downdraft mixture barrel 6 enclosing a series of venturis 7 into the smallest of which discharges the main fuel nozzle 8. A constant level fuel bowl 9 is formed integral with the mid portion of the barrel and feeds fuel through the usual metering elements (not shown) to the main nozzle. An idling passage is also shown, in part, at 10 which discharges adjacent the edge of the throttle when

2

closed, in the usual manner. The lower end of the barrel is flanged as at 11 for attachment to the engine intake manifold. A butterfly throttle valve 12 is mounted in the lower part of the barrel on a shaft 13 and controls the discharge of mixture from the carburetor to the engine. Shaft 13 is located slightly to the right of the center line of the valve for a purpose to be described hereafter.

A box 15 is formed on the lower part of the barrel and receives one projecting end of throttle shaft 13 as shown in Fig. 4. A lever 16 is formed rigid with the throttle shaft within box 15 and has a slotted lower extremity, as at 17, provided with a series of holes 18. A pin 19 secured in one of these holes receives a wire hook 20 connected to a coil spring 21 which is adjustably anchored to a screw 22 threaded in a nut 23 which is seated in a cylinder 24 projecting from box 15. A cap 25 on cylinder 24 may be removed to permit the application of a screw driver to screw 22 for rotating the screw to adjust both the tension of spring 21 and the effective number of turns thereof.

Formed on the opposite side of box 15 is a cup-shaped member 30 having a cap 31 which secures in position a diaphragm 32. A stem 33 is secured to the center of the diaphragm and also to lever 16 on the throttle shaft. A passage 34 connects the space between the cap and the diaphragm to an air bleed valve chamber 36 and to a pair of passages 37 and 38, the former opening into the carburetor barrel posterior to throttle 12 and the latter opening into the upper end of the barrel which admits air thereto. A by pass 34a connects the suction passage to the mixture conduit anterior to the throttle for modifying the suction effect. Air bleed chamber 36 is controlled by an adjustable needle 39 with its head within box 15.

Box 15 is provided with a cover 45 which journals a stub shaft 46 having levers 47 and 48 rigid with the inner and outer extremities thereof, respectively. Lever 48 is apertured, as at 49, for connection to the usual throttle linkage and throttle return spring and to the accelerator pedal located in the driver's compartment. Lever 47 carries an inwardly projecting pin 50 which overlaps lever 16 to form a one-way connection between the lever and the throttle linkage. This connection is such that when the accelerator pedal is retracted by its return spring, lever 16 and the throttle valve are positively closed, as in Fig. 1. However, when the accelerator pedal is depressed, pin 50 does not positively control the throttle, but

moves away from lever 16, as in Fig. 3, and permits movement of the throttle valve in accordance with suction conditions transmitted to diaphragm 32 through passages 37 and 38 and bleed 36.

In operation, the chamber at the left of diaphragm is exposed to suction and the space at the right of the diaphragm to atmosphere.

In order to counter-balance the suction pressure on the diaphragm at every position of the throttle valve and at every speed, the following means are provided which, when hook 20 and spring 21 are connected to lever 16 in right hand hole 18, as the throttle is closed from the fully open position in Fig. 2 to the closed position in Fig. 1, the effective lever arm through which the spring resistance is exerted is gradually increased so that the resistance of spring 21 becomes increasingly more effective. The plurality of holes 18 provide for adjusting this lever arm in accordance with various engine requirements. For instance, if pin 19 is in the extreme left hand hole 18, this lever arm first increases then decreases during throttle closing, this condition being essential for counter-balancing the suction device with some engines.

Additional counter-balancing effect is obtained by means of slight unbalancing of the throttle disk on its shaft 13 in such direction that the flow of mixture through the carburetor tends to open the valve. This unbalancing is very slight and, of course, the effect of the air flow on the valve, opposing the diaphragm, is increased as the valve closes.

Still additional counter-balancing is effected by means of air bleed passage 38 and adjusting screw 39. The effect of this air bleed upon the suction is greatest when the throttle is closed so that the dampening effect of the bleed is greatest at this time. When the throttle is wide open the effect of the bleed is not substantial.

All of the above elements contribute to the proper counter-balancing of the throttle and I have found that with their use I am enabled to construct a very satisfactory governor in which the governed speed is closely maintained under wire variations of load conditions. Moreover, the governor can be adjusted to operate perfectly with different engines of the same general type.

The invention may be modified in various respects as will occur to those skilled in the art and the exclusive use of all modifications as come within the scope of the appended claims is contemplated.

I claim:

1. In a governor for an internal combustion engine, a governor valve responsive to pressure conditions in the engine intake conduit tending to close the valve as the engine speed increases, and means to counter-balance the effect of the intake pressure varyingly as the valve closes, comprising a lever movable with said valve, and a spring anchored at one end and pivotally connected to said lever at the other, said lever having a plurality of pivotal elements for selective connection to said spring to manually adjust the counter-balancing torque applied to said valve.

2. In an engine governor, a pivoted valve subject to engine pressure conditions to control the speed of the engine, a lever rigid with said valve, and means to apply a force eccentrically to said lever to counter-balance the same, said lever having a plurality of elements differently positioned angularly of the axis thereof for attachment of said means to provide for selective adjustment of the point of application of counter-balancing force.

3. In an engine governor, a pivoted valve for controlling the flow of mixture through the engine intake conduit, a device responsive to intake suction for applying closing force to said valve, a lever movable with said valve and having a plurality of spring attaching elements differently positioned angularly of the axis thereof, and a counter-balancing spring anchored at one end and connected to one of said elements.

4. In a governor for an internal combustion engine, a valve for controlling the mixture flow through the engine intake conduit, means connected to the valve tending to open the same, and a device responsive to suction tending to close said valve in opposition to said means, said valve having a pivotal mounting located off center in such direction that normal flow tends to aid said means in urging the valve open.

5. In a governor for an internal combustion engine, a pivoted valve for controlling the mixture flow through the engine intake conduit, a suction responsive device tending to close the valve with increasing force as the suction increases, and a spring for counteracting said device tending to balance the valve in a predetermined position at each suction value, said valve being slightly unbalanced so that flow in the intake conduit tends to open the same with increasing force as the valve closes to aid in the counter-balancing action.

6. In a governor for an internal combustion engine, a pivoted valve for controlling the flow of mixture to the engine, a suction responsive device urging the valve closed, a counter-balancing spring opposing the action of said device, and a fixed air bleed for said device to increasingly dampen the suction effect on said valve as it closes. said valve being mounted slightly off center in such direction that flow tends to open the same so as to further aid in counter-balancing said suction device.

7. In a governor for an internal combustion engine, a governor valve mounted on a shaft, a lever rigid with said shaft, a suction responsive device having a connection to said lever for applying closing force to the valve, a counter-balancing spring anchored at one end and having an attachment to said lever for opposing said device, said attachment being positioned to vary the effective lever arm as the valve closes, and a fixed air bleed on the suction side of said device functioning to increasingly dampen the closing force of the device as the valve closes to aid in counter-balancing said device.

8. In a governor for an internal combustion engine, a pivoted governor valve mounted on a shaft, a lever rigid with said shaft, a suction responsive device having an eccentric connection to said lever for applying closing force to the valve, a counter-balancing spring having an attachment to said lever for opening the valve in opposition to said device, said attachment being positioned so that the effective lever arm is varied as the valve closes, and a fixed air bleed on the suction side of said device for dampening the suction action increasingly as the valve closes, said valve shaft being slightly off center in such direction that flow tends to open the valve to further aid in counter-balancing said suction device.

9. A governor as described in claim 8 in which said counter-balancing spring, said air bleed, and said spring and lever attachment are adjustable for adjusting the functioning of the governor.

10. In a governor for an internal combustion engine having a mixture conduit, a governor valve controlling said conduit, a spring tending to open said valve, a manual control having a one-way operative connection to said valve for closing the same at the will of the operator, a device also tending to close said valve comprising a suction chamber with a movable wall operatively connected to said valve, and an air bleed for said suction chamber independent of said manual control whereby the closing effect of suction on said valve is increasingly dampened as said valve closes.

ROGER R. DULONG.

REFERENCES CITED

The following references are of record in the file of this patent:

UNITED STATES PATENTS

Number	Name	Date
1,188,995	Rice	June 27, 1916
1,212,177	Benjamin	Jan. 16, 1917
2,209,421	Sarnes	July 30, 1940
2,359,230	Mallory	Sept. 26, 1944

FOREIGN PATENTS

Number	Country	Date
426,632	Great Britain	Apr. 8, 1935