Jan. 8, 1935. S. SHAPIRO 1,987,373

HUMIDOR

Filed Aug. 10, 1934

Fig. 1.

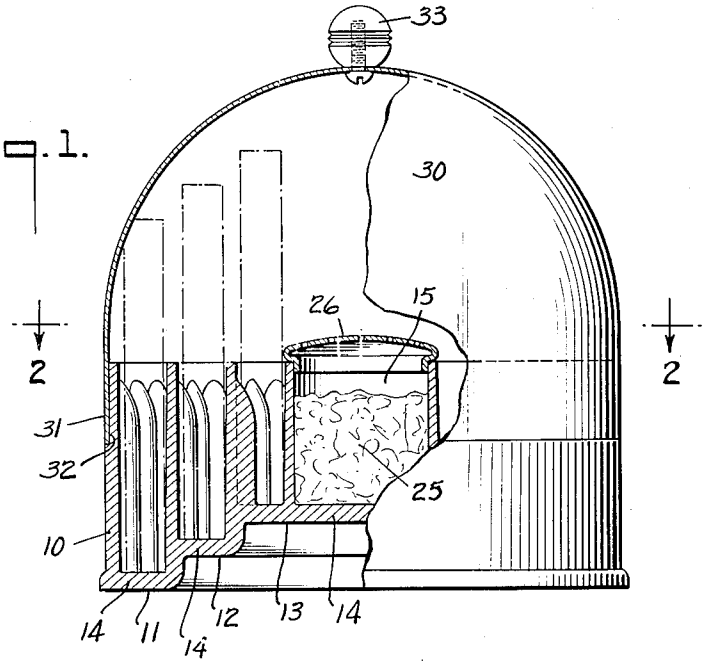

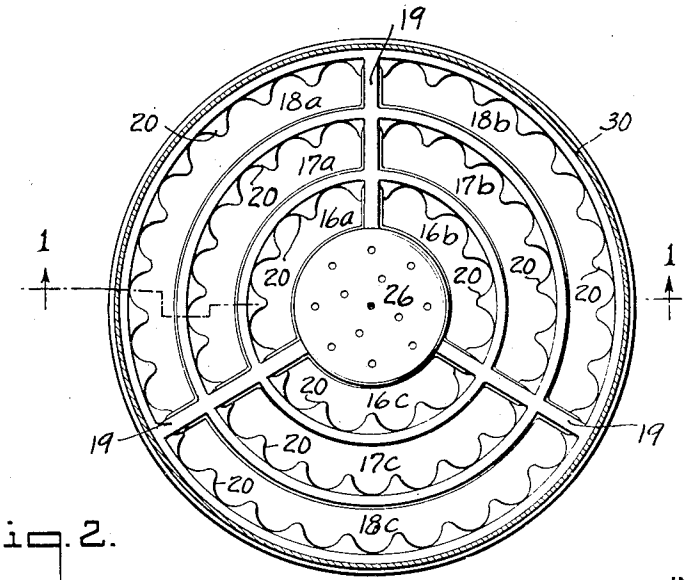

Fig. 2.

INVENTOR
SOLOMON SHAPIRO
BY John M. Ash
ATTORNEY

Patented Jan. 8, 1935 1,987,373

UNITED STATES PATENT OFFICE

1,987,373

HUMIDOR

Solomon Shapiro, Cedarhurst, N. Y.

Application August 10, 1934, Serial No. 739,197

9 Claims. (Cl. 131—30)

The present invention relates to humidors and is more particularly directed toward humidors adapted for holding cigarettes.

The present invention contemplates a humidor designed to receive the contents of two or more standard packages of cigarettes. It is arranged so that the cigarettes stand on end so that each cigarette may be easily grasped for removal. The device is provided with channels or compartments adapted to receive and hold the cigarette in position and prevent it from falling out of place or becoming damaged when only part of the humidor is filled. By providing a humidor capable of holding such a quantity of cigarettes, it is possible for one to have readily accessible several brands.

According to the present invention the device comprises essentially a base provided with channels adapted to receive and hold the cigarettes upright, and it may have a cover. The base is preferably made out of comparably light molded material, such as resin, and carries a compartment to receive a moistening medium. The cover may be sheet metal of ornamental shape.

The accompanying drawing shows for purposes of illustrating the present invention one of the many possible embodiments in which the invention may take form, it being understood that the drawing is illustrative of the invention rather than limiting the same. In the drawing:

Fig. 1 is a vertical sectional view on the line 1—1 of Fig. 2 parts being in elevation; and

Fig. 2 is a horizontal section taken on the line 2—2 of Fig. 1.

The base of the humidor 10 is, as above stated, preferably in the form of a molded piece of resinous material. It is stepped on the under surface as indicated at 11, 12, 13 and the bottom wall 14 is of substantially uniform thickness. It is provided with a central well indicated at 15. It is also provided with annular cigarette receiving compartments or channels indicated at 16*a*, 16*b* and 16*c*, 17*a*, 17*b*, and 17*c*, and 18*a*, 18*b* and 18*c*. The compartments or channels 16*a*, 16*b* and 16*c* are above the central portion 13 of the bottom wall, while compartments or channels 17*a*, 17*b* and 17*c* are above the portion 12 of the bottom wall, and compartments or channels 18*a*, 18*b* and 18*c* are above the portion 11 of the bottom wall. Radially extending separators 19 form the radial walls of the cigarette receiving spaces.

The one wall of each of the cigarette receiving spaces is provided with vertical ribs as indicated at 20. These ribs being of such size and position as to comfortably grip the cigarette and hold it upright as indicated in the dot and dash lines of Fig. 1. This arrangement of ribs permits stacking the cigarettes side by side with no appreciable space between them. The device may therefore be made much more compact than it would be if a hole was provided for each cigarette. Space 15 may receive a sponge indicated at 25 and be covered by a removable perforated sheet metal cover indicated at 26. This cover member prevents inserting the cigarettes into the space 15.

It will be noted in the drawing that the device shown contains spaces to receive sixty cigarettes. This is the contents of three cigarette packages and hence one can empty three packages of cigarettes into the humidor. This allows a choice of the brand of cigarette to be withdrawn. By placing the moisture supply below the cigarettes, the vapor rises to keep them moist.

The outer cover 30 is preferably a sheet metal stamping or spinning of generally hemispherical shape with a depending skirt 31 to fit a reduced portion 32 of the base member. It has an ornamental nob 33. It will, of course, be understood that the base may be used as a cigarette holder without a cover, if desired.

It is obvious that the invention may be embodied in many forms and constructions within the scope of the claims, and I wish it to be understood that the particular form shown is but one of the many forms. Various modifications and changes being possible, I do not otherwise limit myself in any way with respect thereto.

What is claimed is:

1. A base for humidors, and the like, said base having vertical walls to provide a plurality of upwardly opening, horizontally extending cigarette receiving channels, each channel adapted to receive a plurality of cigarettes side by side, one of the walls of each channel having vertical ribs to hold each cigarette vertical and spaced from adjacent cigarettes in the same channel.

2. A humidor base as claimed in claim 1, wherein the vertical walls are concentric and radial to form arcshaped channels.

3. A humidor base as claimed in claim 1, wherein the vertical walls are concentric and radial to form arcshaped channels, and the ribs are on the inner faces of the annular walls.

4. A base for humidors, and the like, said base having vertical walls to provide a plurality of upwardly opening, horizontally extending cigarette receiving channels, each channel adapted to receive a plurality of cigarettes side by side, one of the walls of each compartment having vertical

ribs to hold each cigarette vertical and spaced from adjacent cigarettes in the same channel, wherein the bottoms of adjacent channels are at different elevations so that the cigarettes in one channel may project higher than those in said adjacent channel.

5. A humidor base as claimed in claim 1, wherein the vertical walls are concentric and radial to form arcshaped channels, and the bottoms of the channels nearer the axis are higher than the bottoms of the channels farther from the axis.

6. In a humidor, a base having a bottom, a plurality of annular vertical walls, and radial walls extending from the inner to the outer vertical wall, said walls forming a central well for a moistening medium and a plurality of cigarette receiving compartments, the annular walls having ridges to hold the cigarettes vertical and spaced from one another, and a closed cover fitted to the base and extending above the top of the cigarettes.

7. A humidor as claimed in claim 6, wherein the bottom of the inner compartments is fixed in position higher than that of the outer compartments so that the inner cigarettes project above the outer ones.

8. In a humidor, a base having a bottom, a plurality of annular vertical walls, and radial walls extending from the inner to the outer vertical wall, said walls forming a central well for a moistening medium and a plurality of cigarette receiving compartments, the annular walls having ridges to hold the cigarettes vertical and spaced from one another, and a closed cover fitted to the base and extending above the top of the cigarettes, and a perforated cover for the well to prevent the cigarettes from coming into contact with the contents of the well.

9. A base for humidors and the like, comprising vertical walls defining a plurality of horizontally extending, upwardly opening channels, the height of said walls being less than the length of a cigarette, said channels having bottoms placed at successively different heights, at least one wall of each channel being provided with ribs for holding individual cigarettes in substantially vertical position.

SOLOMON SHAPIRO.