C. D. BYERS.

REVERSING DEVICE FOR PUMPS.

APPLICATION FILED MAR. 27, 1916.

1,219,373. Patented Mar. 13, 1917.

Fig. 1.

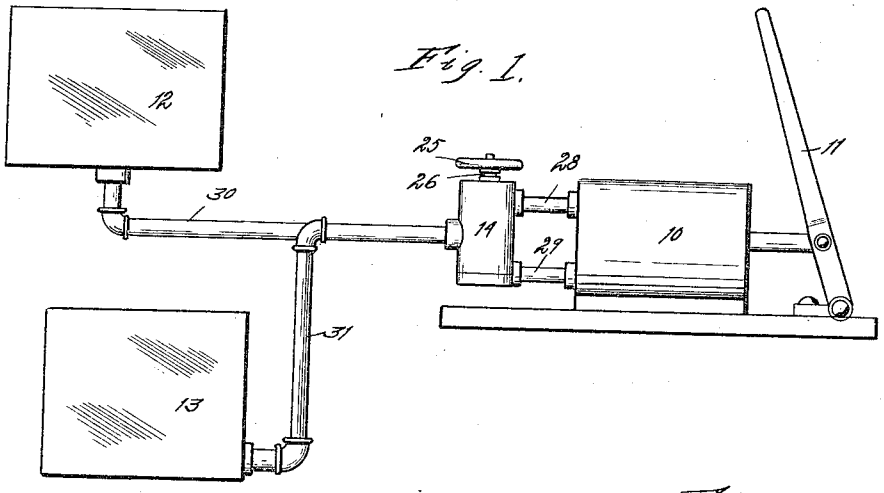

Fig. 2.

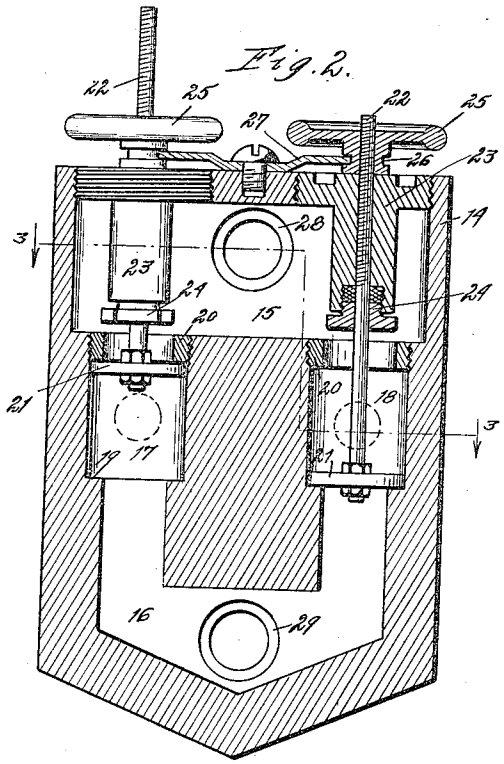

Fig. 3.

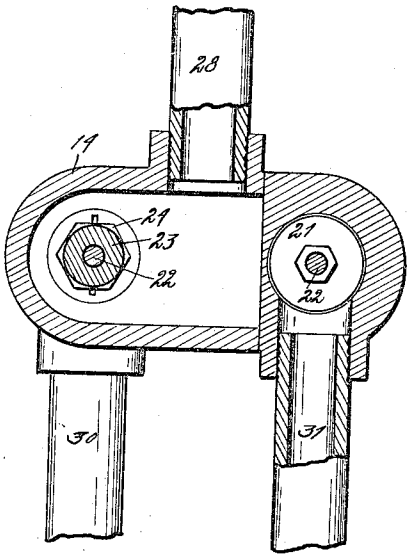

Witness.

G. F. Turechek.

Inventor

Cyrus L. Byers.

By Orwig & Bair

Attys.

THE NORRIS PETERS CO., PHOTO-LITHO., WASHINGTON, D. C.

UNITED STATES PATENT OFFICE.

CYRUS D. BYERS, OF WOODWARD, IOWA.

REVERSING DEVICE FOR PUMPS.

1,219,373. Specification of Letters Patent. Patented Mar. 13, 1917.

Application filed March 27, 1916. Serial No. 87,111.

To all whom it may concern:

Be it known that I, CYRUS D. BYERS, a citizen of the United States, and resident of Woodward, in the county of Dallas and State of Iowa, have invented a certain new and useful Reversing Device for Pumps, of which the following is a specification.

My object is to provide a device of simple, durable and inexpensive construction, designed to be combined with or associated with any of the ordinary force pumps now in common use, whereby the operator may readily, quickly and easily reverse the direction of flow of both the incoming and outgoing currents of water, so that the pump may be made to either deliver liquid to a tank or remove it from the tank, without changing the pipes leading to the tank.

My invention consists in the construction, arrangement and combination of the various parts of the device, whereby the objects contemplated are attained, as hereinafter more fully set forth, pointed out in my claims, and illustrated in the accompanying drawings, in which:

Figure 1 shows a side elevation of a pump of ordinary construction, and two tanks and systems of pipes communicating between the tanks and the pump, and also my improved current reversing device connected with these systems of pipes and with the pump, and illustrating the general arrangement of the parts to which my improved current reversing device may be advantageously applied.

Fig. 2 shows a vertical, central, sectional view through a current reversing device embodying my invention, and

Fig. 3 shows a sectional view on the line 3—3 of Fig. 2.

Referring to the accompanying drawings, I have used the reference numeral 10 to indicate a force pump of ordinary construction. In the illustration shown I have shown a hand lever 11 by which the pump may be operated. My device may be applied to any kind of a pump. In Fig. 1 of the drawings I have shown two tanks 12 and 13 connected by means of pipe systems with the pump.

My improved current reversing device comprises a body portion 14 having at its upper part an open chamber 15 and a passageway 16 communicating at its upper ends with said open chamber 15, and extending downwardly to a point near the bottom of the body portion 14 and then across the body portion, thus forming a substantially U-shaped passageway.

Near the upper ends of the passageway 16 are two cylinders 17 and 18, each of which has at its lower end a shoulder 19 and at its upper end is a short tubular pipe section 20, the lower end of which forms a shoulder.

Within each cylinder is a piston 21 capable of being moved to position against either of the shoulders at the opposite ends of the cylinder. This piston is provided with a stem 22 screw-threaded at its upper end. The stem is extended through a block 23 which is preferably screwed into the top of the body portion 14, and is provided at its bottom portion surrounding the stem 22 with a stuffing-box 24.

On top of the block 23 a hand wheel 25 is rotatably mounted, and this hand wheel is internally threaded to engage the threads of the stem 22. In order to prevent up-and-down movement of the hand, I have formed an annular groove 26 in the hub of the hand wheel, and a stationary plate 27 fixed to the body portion 14 is projected into said groove, whereby the hand wheel may be freely rotated but will be held against up-and-down movement. By this arrangement it is obvious that a manipulation of either of the hand wheels 25 will result in raising or lowering the piston connected therewith.

There are two pipes for connecting my improved reversing device with the pump, and two pipes for connecting it with the tanks 12 and 13. These pipes are arranged as follows: The pipes 28 and 29 that are connected to the pump are so arranged that the pipe 28 enters the chamber 15, and the pipe 29 enters the bottom portion of the passageway 16. The two pipes 30 and 31 that are connected to the tanks enter the cylinders 17 and 18, as shown in Fig. 3. The positions of these pipes are indicated by dotted lines in Fig. 2.

In practical use and assuming that my improved current reversing device is applied to a pump and piping systems as illustrated and described herein, it is obvious that when one of the pistons 21 is in an elevated position and the other in a lowered position, as illustrated in Fig. 2, a current flowing through the pipe 28 from the pump will enter the chamber 15 at the top and pass into the cylinder 18 and out through the pipe 31, and the current will flow into the pump through the pipe 30 and downwardly

through the cylinder 17 and passageway 16 to the pipe 29.

If it is desired to reverse the current, the positions of the two pistons are reversed, the one on the left, as shown in Fig. 1, being moved to the bottom of the cylinder, and the one on the right to the top, whereupon an operation of the pump will result in reversing the flow of liquid, so that the tank from which the liquid was originally drawn will have liquid pumped into it, and the tank that the liquid was formerly pumped into will have the liquid drawn out of it. By this arrangement the necessity of manipulating various pipe systems in order to either remove liquid or pump it into any given tank, is obviated, and a great deal of the expense, time and annoyance caused by moving about and connecting up various pipe systems is avoided.

It is obvious that my improved current reversing device may, if desired, be formed integral with a part of the pump wall or body, and I do not desire to be understood as limiting myself to providing a separate body portion for my improved reversing device.

I claim as my invention;

1. In a device of the class described, a pump having a reversing mechanism comprising a body provided with two spaced cylinders open at their lower ends, and having valve seats formed at their lower ends, annular members screwed into the upper ends of said cylinders forming valve seats, pistons in said cylinders, removable heads mounted in said body in line with the respective cylinders having openings through them, stems on said pistons extended upwardly through said openings, and means for adjusting said stems longitudinally for varying the positions of said pistons.

2. In a device of the class described, a pump having a reversing mechanism comprising a body having spaced cylinders open at their lower ends, and having valve seats at their lower ends, annular members mounted in the upper ends of said cylinders forming valve seats, said body having a passage communicating with the lower ends of said cylinders, and another passage communicating with the upper ends of said cylinders, means for independently establishing communication between each cylinder and the pump proper, removable heads in said body spaced from said cylinders in alinement therewith having openings through them, pistons in said cylinders, stems on said pistons extending through said openings, said device having means whereby either piston may be adjusted to a variety of positions, and may be secured in any position of its adjustment.

Des Moines, Iowa, March 3, 1916.

CYRUS D. BYERS.

Copies of this patent may be obtained for five cents each, by addressing the "Commissioner of Patents, Washington, D. C."