Aug. 18, 1925. 1,550,626

J. NELSON

POWER PRESS

Filed Nov. 8, 1923 2 Sheets-Sheet 1

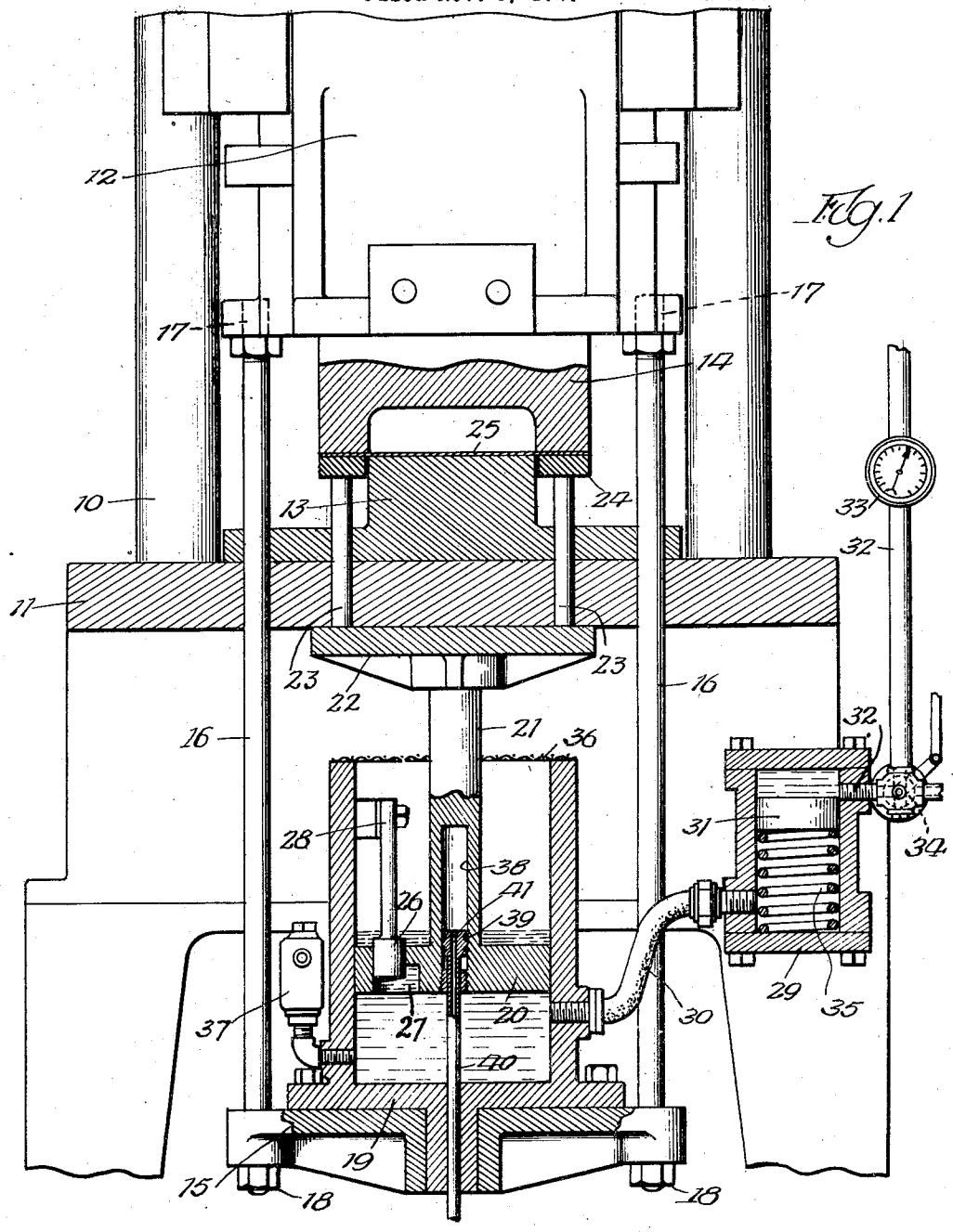

Fig. 1

Inventor
John Nelson

By J. F. Jochum Jr.
Atty.

Aug. 18, 1925. 1,550,626

J. NELSON

POWER PRESS

Filed Nov. 8, 1923 2 Sheets-Sheet 2

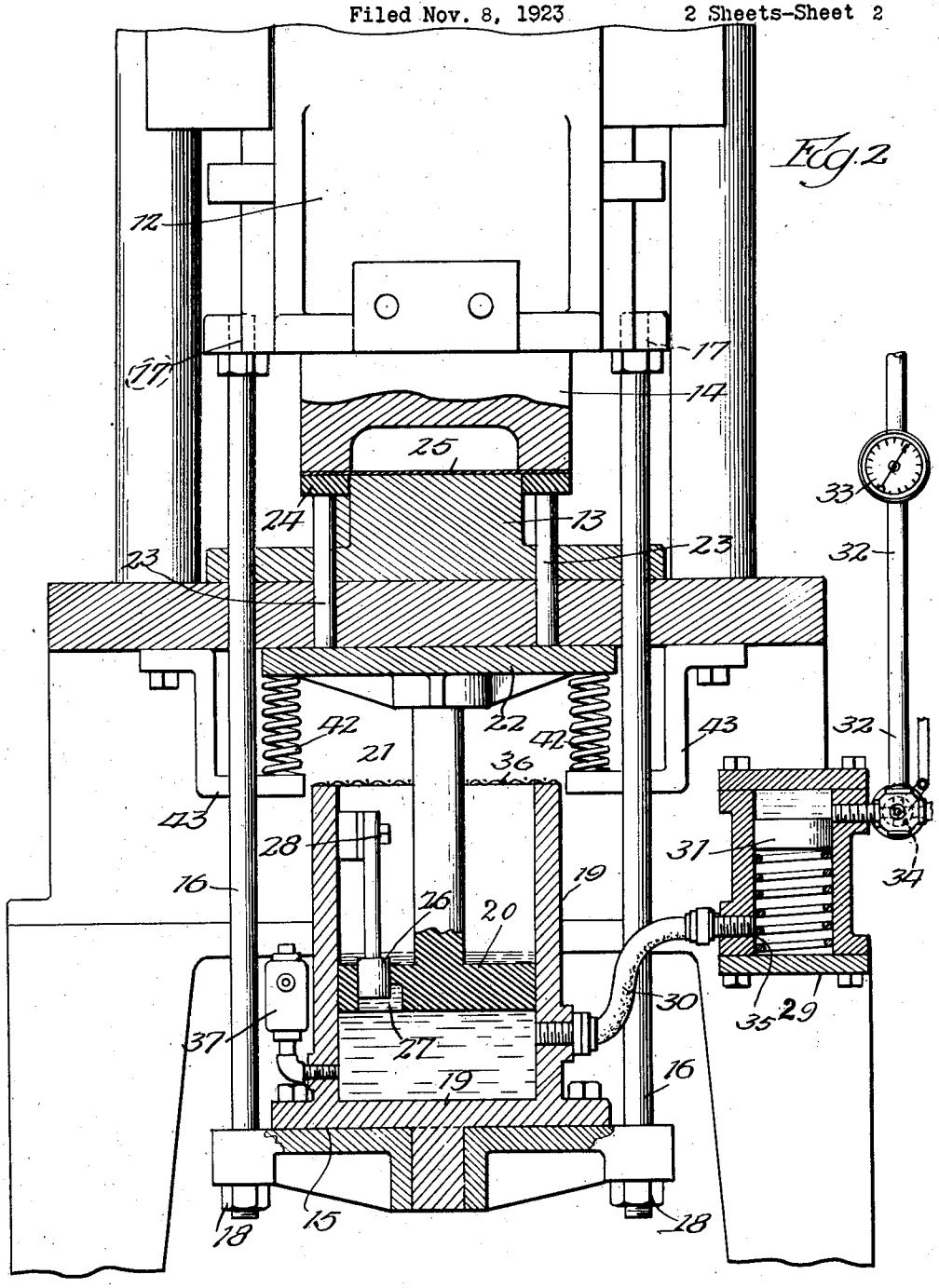

Fig. 2

Inventor
John Nelson
By J. F. Jochum & Etty.

Patented Aug. 18, 1925. 1,550,626

UNITED STATES PATENT OFFICE.

JOHN NELSON, OF CHICAGO, ILLINOIS, ASSIGNOR TO MARQUETTE TOOL & MANUFACTURING COMPANY, OF CHICAGO, ILLINOIS, A CORPORATION OF ILLINOIS.

POWER PRESS.

Application filed November 8, 1923. Serial No. 673,405.

To all whom it may concern:

Be it known that I, JOHN NELSON, a citizen of the United States, residing at Chicago, in the county of Cook and State of Illinois, have invented certain new and useful Improvements in Power Presses, of which the following is a specification.

This invention relates generally to improvements in power presses, but more particularly to such presses as are used for forming sheet metal parts.

In the drawing of flat sheet metal into shapes it is necessary that the blank be held between two blank holding surfaces. Heretofore a mechanical toggle motion or cam operated holder has been employed but with such mechanism the blank holding means does not yield to compensate variations in thickness of the material to be drawn.

Another method heretofore employed in connection with such presses has been the installation of a flexible blank holding means such as pneumatic die cushions or fluid pressure cushions.

The present invention more specifically relates to an improvement in the method of application of such cushioning equipment.

In drawing sheet metal a certain portion of the power of the press is required for forming the metal into the shape of the die, but if the blank is to be held so as to prevent it from buckling or wrinkling during the forming operation, then additional power is required for thus holding the blank. The type of die cushions heretofore used exerts its pressure upon the blank holder ring and to overcome this pressure of the die and cushion, a portion of the power of the press must be employed.

It is one of the objects of the present invention to provide an improved blank holding means which will obviate the necessity of utilizing any portion of the power of the press for operating the blank holding means, so that the entire power of the press may be employed upon the work to shape the latter. For illustration, if a given job were to require ten tons of pressure for the forming or shaping of the material, and an additional five tons of pressure were required for holding the blank, a total of fifteen tons of power would be necessary to do this work in any press which is not equipped with the cushioning means as disclosed by the present invention.

With a press equipped with the present invention, and under the same conditions, only ten tons of power would be required to do the work as the necessity for the extra five tons of power for operating the blank holder will be eliminated.

A further object of the present invention is to provide improved means for automatically releasing from the ram of the press, at any desired point in the cycle of operation of the press, the pressure against the blank holder exerted by the die cushion upon the ram of the press. In practice it has been found to be most desirable to relieve this pressure when the crank is at its dead center position at the bottom of the stroke.

Heretofore the pressure supplied to the blank holder ring has been exerted upon the ring even while the press is idling, or in other words during the upstroke of the ram or during the time while the ram is traveling upwards. As it is necessary in a majority of cases on such presses to stop the press after each stroke, it is necessary to apply very intricate clutch mechanism and means for interrupting the travel of the press at each stroke. By having a constant pressure on the blank holder the problem of stopping the press has been a considerable source of annoyance and trouble for the users of such equipment and it might therefore be said that the clutch of the press is its weakest point.

With the present invention it will be seen that an improved means has been provided for relieving entirely this pressure on the back stroke of the press, or at any desired point, which eliminates the difficulties of the problem to stop the press at any time during its operation. It also renders it possible to greatly widen the scope of the press, inasmuch as the application of this invention will increase the capacity of the press for larger work.

In the present form of the invention the cushion is shown and will be described as being adapted for use with liquid pressure, but it is to be understood that the invention is not to be limited to such uses as the same results may be accomplished and the apparatus will work as efficiently by using compressed air or any other suitable fluid pressure means.

To the attainment of these ends and the accomplishment of other new and useful

objects as will appear, the invention consists in the features of novelty in substantially the construction, combination and arrangement of the several parts hereinafter more fully described and claimed and shown in the accompanying drawings illustrating this invention and in which—

Figure 1 is a view partly in elevation and partly in section of a portion of a sheet metal press, having applied thereto a cushioning means constructed in accordance with the principles of this invention.

Figure 2 is a view similar to Figure 1 of a modified form of the invention.

Referring more particularly to the drawings the numeral 10 designates generally a portion of a press having a bolster 11 and a reciprocating ram 12, all as well known in machines of this character.

Mounted upon the bolster plate is a male die member 13 and a female die member 14 co-operating with the male die member 13 is secured to the ram 12 for reciprocation therewith.

A supporting bar or member 15 is arranged beneath the bolster 11 and is connected with the ram 12 for reciprocation therewith in any desired or suitable manner such as by means of bars or rods 16, which pass loosely through the bolster 11 and are secured by one extremity as at 17 to the ram. The other extremities of the rods may be provided with nuts or collars 18 threaded thereupon, for supporting the member 15 and through which latter member the bars or rods 16 pass.

Mounted upon the member 15 is a cylinder 19 of any desired size and configuration and reciprocable in the cylinder 19 is a piston 20 having connected therewith a piston rod 21, which passes through the top of and beyond the cylinder 19 and carries at its free end a pin plate 22. Pins 23 pass loosely through the bolster 11 and rest upon the pin plate 22. These pins support a draw ring 24 which encompasses and cooperates with the male die member 13.

Inasmuch as the cylinder 19 is connected with the ram 12 through the medium of the bars 16 and member 15, for reciprocation with the ram, it will be manifest that if pressure is applied to the piston 20 on the under side thereof, the piston will move upwardly in the cylinder until the pin plate 22 is arrested in its movement by engagement with the lower face of the bolster 11. The pins 23 are of such a length that when the pin plate 22 engages the bolster 11 the upper face of the draw ring 24 will be substantially flush with the upper face of the male die member 13, so that when the work or material 25 is placed in position upon the male die member 13, the edges of the material will rest upon the draw ring 24.

Assuming the ram 12 to be elevated with respect to the male die member 13, the work 25 may be readily placed in position. When, however, the ram 12 descends to lower the female die member 14 and as soon as the die 14 engages the work, the pressure exerted in the cylinder 19 below the piston 20 will cause the work to be gripped between the die 14 and the draw ring 24. As the ram and die 14 descend further so as to shape the work over the male die, this pressure upon or gripping of the material will be constant by reason of the fact that the relative position of the piston 20 with respect to the cylinder 19 does not change.

When the ram ascends, the cylinder 19 will also ascend. The piston 20 will also ascend until the pin plate 22 abuts the bolster 11, at which time the movement of the pin plate and the piston 20 will be arrested. The ram 12 and die 14 will continue to ascend until the ram reaches the limit of its upward movement.

Any suitable means may be provided for relieving the pressure in the cylinder 19 beneath the piston 20 on the upward stroke of the ram and at the time when the pin plate 22 abuts the bolster 11, such as a valve 26, which may be provided for controlling an opening 27, which passes through the piston 20. This valve 26 may be supported in any suitable manner such as by being attached to the cylinder wall as at 28. The valve 26 is so positioned that when the draw ring 24 starts to descend, or to move downwardly from the position shown in Figures 1 and 2, the opening 27 through the piston 20 will be closed so that the desired pressure may be exerted upon the draw ring.

It will be seen that with this construction the cylinder 19, member 15, rods 16, die 14, together with the draw ring 24, pins 23, pin plate 22, piston 21 and piston 20, together with the valve 26 move downwardly as a unit. The entire power of the press will therefore be exerted through the die 14 upon the work 25. The gripping power of the draw ring 24 to grip the material between the draw ring and the die 14 will be exerted entirely from the pressure within the cylinder 19.

This pressure is obtained through the medium of the fluid in the cylinder 19 and this fluid pressure may be controlled in any desired or suitable manner, but preferably in the following manner.

A supplemental cylinder 29 is provided and may be supported from any stationary part of the machine. A flexible connection 30 in the form of a pipe or conduit provides communication between the cylinders 29 and 19, the point of discharge of the connection 30 into the cylinder 19 being disposed below the piston 20.

Within the cylinder 29 there may be provided a piston 31 and discharging into the

cylinder 29 above the piston 31 is a pipe 32, which is connected with any suitable source of fluid pressure supply, a gauge 33 being preferably provided in the pipe line. A three-way valve 34 may also be provided in the pipe line 32 for controlling the discharge of fluid into the cylinder 29 above the piston 31 and from the cylinder.

It will therefore be seen that when fluid pressure is admitted into the cylinder 29 above the piston 31, the latter will be depressed and will exert pressure upon the fluid which is trapped within the cylinder 29 beneath the piston 31 and within the cylinder 19 beneath the piston 20, this latter fluid being free to flow backwardly and forwardly between the cylinders 19 and 29 through the connection 30. The fluid pressure in the cylinder 19 is controlled by the amount of pressure exerted in the cylinder 29 above the piston 31, it being of course understood that when pressure is to be admitted into the cylinder 29 from the pipe 32 the valve 34 must be set for that purpose. When the pressure in the cylinder 29 above the piston 31 is to be relieved the three-way valve 34 is correspondingly adjusted and if desired any suitable means may be provided for returning the piston 31 to relieve the pressure exerted thereby in the cylinder 29. A suitable and efficient means for thus shifting the piston 31 embodies a spring device 35 arranged on the under side of the piston.

The valve 34 may be operated by hand or if desired may be connected with any suitable moving part of the press for automatically operating the same.

Inasmuch as the pressure in the cylinder 19 is being exerted upon the draw ring 24 when the ram 12 and die 14 together with the draw ring 24 are ascending, it will be manifest that before the die 14 passes out of engagement with the work upon the upstroke of the die, the pressure upon the draw ring 24 should be relieved. This is accomplished by reason of the fact that just before the pin plate 22 contacts with the bolster 11 for arresting the movement of the former, the valve 34 will be opened to relieve the pressure below the piston 20 and just as the pin plate 22 contacts with the bolster 11 to arrest the movement of the former and also the movement of the piston 20, the valve 26 will be unseated by reason of the fact that the cylinder 19 continues to move upwardly, and as the cylinder moves upwardly and as the valve 26 is unseated, any pressure exerted upon the liquid beneath the piston 20 will cause the liquid to flow through the opening 27 to the other side of the piston.

The cylinder 19 may be an open cylinder and in order to prevent the entrance of any dirt or foreign matter into the cylinder a suitable reticulated cover 36 may be provided.

If desired a safety blow off device 37 may be provided for relieving the cylinder 19 and piston 20 of excess pressure.

It will therefore be manifest that with this improved construction all of the pressure which is exerted upon the draw ring 24 by the cushioning device is derived entirely from the cushioning device and that all of the power of the press or the power which is applied to the ram 12 and die 14 will be utilized entirely for the shaping or forming of the article, with the result that the capacity of the press may be increased and that none of the power of the press will be utilized for any other purpose than the shaping or forming of the article.

It will be manifest that when the valve 26 is unseated and the pressure in the cylinder beneath the piston 20 is relieved, the weight of the pin plate 22, the pins 23 and the draw ring 24 would cause them to gravitate and would permit the draw ring 24 to drop during certain portions of the operation of the press, and which might be objectionable.

Any suitable means may therefore be provided for sustaining the weight of these parts under such conditions and in the form of the invention shown in Figure 1, this result is accomplished preferably by providing a chamber 38, which opens through the lower face of the piston. A supplemental piston 39 is arranged within the chamber 38 and connected with the piston 39 is a hollow piston rod 40, the piston 39 being provided with an opening 41 communicating with the opening in the piston rod 40 and discharging into the chamber 38. Any suitable fluid pressure, derived from any suitable source (not shown) may be delivered into the chamber 38 through the hollow piston rod 40 and piston 39 and which pressure is sufficient to overcome the weight of these parts. Obviously the pressure in the chamber 38 may, if necessary or desirable, be relieved in any suitable manner, when there is a sufficient pressure within the cylinder 19 and beneath the piston 20.

In the form of the invention shown in Figure 2, the weight of the pin plate 22, pins 23 and draw ring 24 may be overcome by means of suitable cushioning devices such as coil springs 42, any number of which may be provided. One end of each of these springs 42 rests upon a suitable bracket or support 43, and the other ends thereof engage the pin plate 22.

When the ram is at its top position the die 14 is a sufficient distance away from the draw ring 24 to allow the finished cup to be removed from the die and a new blank to be fed into the die for the next operation. Then the ram descends carrying down with

it the cylinder 19. At the time when the die 14 meets the blank which is resting on the drawing ring 24 and die 13, the valve 26 has reached the piston 20 and is in the position as shown in Figure 1 of the drawing, thereby closing the opening 27 and the chamber beneath the piston 20, so that the fluid in that chamber will exert a pressure against the piston 20 and the cylinder 19, and also against the piston 31 in the supplemental or secondary cylinder 29. The pressure within the chamber 19 under the piston 20 is as great downward on the cylinder 19 as it is upward on the piston 20.

The cylinder 19 resting on the cross member 15 will exert a downward pressure on the member 15 and the rods 16, helping the ram to move downward. At the same time, since the relative position of the piston 20 with respect to the cylinder 19 has not changed, the gripping means or draw ring 24 will still exert the same pressure against the lower surface of the die 14 as it did at the time when the die 14 first touched the blank 25 and gripped it against the draw ring 24. In other words the pressure in the chamber 19 beneath the piston 20 needs not to be overcome by the ram 17 in its downward movement, as the cylinder 19 moves down with the ram at the same speed as the ram itself travels, in the same manner as if the draw ring 24 and die 14 would be jaws fastened to the ram 17, and these jaws being held together by some means such as a pivot or otherwise.

In some drawing operations, such for instance as on automobile doors, it is necessary to change the pressure between the two gripping surfaces of the blank holding means, i. e. the draw ring 24 and die 14, during the metal forming operation. Often the curves in such a rectangular shape are very slight and it is important that these curves be held to a fine degree of accuracy. This is only possible if the metal is set, so that it will not spring back because of its elasticity, after having been shaped. The setting is accomplished by holding the metal between the gripping means so rigidly that the slight curve which is wanted is stretched or formed out of that part of the sheet which is inside of and free from the draw ring, and which usually is the part or portion that is shaped over the stationary center block of the die, such as the die 13 in Figure 1 of this drawing. As illustrated the die 13 is provided with a straight surface on the top which contacts with the metal, but if that surface should have a slight curve of irregular shape, then this method of operation as described here would be used. After the die 14 and the gripping means 24 have descended a short distance over the die 13 and the metal during that portion of the cycle of the operation having been held rigidly with sufficient pressure so that the metal between the blank holder surfaces (24 and 14) was not allowed to flow in, the metal will of course be stretched and will take a set.

If this high pressure is retained on the gripping means, and the die 14 continues down without allowing the metal to flow any between the gripping means, as in the first part of the drawing or shaping operation just described, the metal would break. In order to be able to finish such a shape in the same operation it is therefore necessary to modulate the pressure in the auxiliary cylinder 29, which is accomplished by means of the valve 34, which will vary the pressure on the other side of the piston 31, with the result that in an operation such as just described the pressure on the gripping means 24 would at that point in the cycle of the operation of the press, be reduced sufficiently to hold the metal with enough pressure to prevent wrinkling and yet allow it to flow into the die so it will not tear.

In other cases the opposite may be of an advantage namely, that the pressure would be increased at a further point of the operation instead of decreased as is the case in the operation just described, and this variation of pressure is controlled by the valve 34.

While the preferred forms of the invention have been herein shown and described, it is to be understood that various changes may be made in the details of construction and in the combination and arrangement of the several parts, within the scope of the claims, without departing from the spirit of this invention.

What is claimed as new is:—

1. A draw press embodying a forming die, a ram co-operating with the forming die, yielding blank holding means, the said ram being operable upon the work freely of the stress of the blank holding means, the said yielding blank holding means embodying fluid pressure means, and means for sustaining the weight of the work engaging portion of the blank holding means.

2. A draw press embodying a forming die, a ram co-operating with the forming die, fluid pressure controlled blank holding means operable upon the work independently of the said ram, means for controlling the said fluid pressure means, and additional means for sustaining the weight of certain parts of the blank holding means when the fluid pressure is reduced.

3. A draw press embodying a forming die, a ram co-operating with the forming die, fluid pressure controlled blank holding means operable upon the work independently of the said ram, means for controlling the said fluid pressure means, and additional fluid pressure means for sustaining the

weight of certain parts of the blank holding means when the stress of the first recited fluid pressure means is reduced.

4. A draw press embodying a forming die, a ram co-operating with the forming die, fluid pressure controlled blank holding means operable upon the work independently of the said ram, means for controlling the said fluid pressure means, additional fluid pressure means for sustaining the weight of certain parts of the blank holding means when the stress of the first recited fluid pressure means is reduced, and means for controlling each of the fluid pressures.

5. A draw press embodying a forming die, a ram co-operating therewith and operable upon the work, fluid pressure controlled blank holding means, said means embodying co-operating elements movable relatively one with relation to the other and between which element the fluid pressure is created, one of the said elements being movable with the said ram, the other element being operable upon the work, and additional means for sustaining the weight of the said other element, the said blank holding means being operable upon the work independently of the said ram.

6. A draw press embodying a forming die, a ram member co-operating therewith and operable upon the work, fluid pressure controlled blank holding means, said means embodying co-operating elements movable relatively one with relation to the other and between which element the fluid pressure is created, one of the said elements being movable with the said ram member, the other element being operable upon the work, additional means for sustaining the weight of the said other element, the said blank holding means being operable upon the work independently of the said ram member, and means for controlling the said fluid pressure.

7. A draw press embodying a forming die, a ram member co-operating therewith and operable upon the work, fluid pressure controlled blank holding means, said means embodying co-operating elements movable relatively one with relation to the other and between which element the fluid pressure is created, one of the said ram elements being movable with the said member, the other element being operable upon the work, and additional fluid pressure means for sustaining the weight of the said other element when the stress of the first recited fluid pressure is relieved, the said blank holding means being operable upon the work independently of the said ram member.

8. A draw press embodying a forming die, a ram member co-operating therewith and operable upon the work, fluid pressure controlled blank holding means, said means embodying co-operating elements movable relatively one with relation to the other and between which element the fluid pressure is created, one of the said ram elements being movable with the said member, the other element being operable upon the work, additional fluid pressure means for sustaining the weight of the said other element when the stress of the first recited fluid pressure is relieved, the said blank holding means being operable upon the work independently of the said ram member, and means for separately controlling the said fluid pressure means.

9. A draw press embodying a forming die, a ram member co-operating with the forming die, fluid pressure controlled blank holding means, said means embodying co-operating elements relatively movable one with relation to the other and between which elements the fluid pressure is created, one of said elements being fixed with relation to and movable with the said ram member, means for automatically relieving the stress of the said fluid pressure, and means for sustaining the weight of the other of the said elements when the stress of the said fluid pressure means is relieved.

10. A draw press embodying a forming die, a ram member co-operating with the forming die, fluid pressure controlled blank holding means, said means embodying co-operating elements relatively movable one with relation to the other and between which elements the fluid pressure is created, one of said elements being fixed with relation to and movable with the said ram member, means for controlling the fluid pressure, additional means for automatically relieving the stress of the said fluid pressure, and means for sustaining the weight of the other of the said elements when the stress of the said fluid pressure means is relieved.

11. A draw press embodying a forming die, a ram member element co-operating with the forming die, fluid pressure controlled blank holding means, said means embodying co-operating elements relatively movable one with relation to the other and between which elements the fluid pressure is created, one of said elements being fixed with relation to and movable with the said ram member, means for automatically relieving the stress of the said fluid pressure, additional fluid pressure means for sustaining the weight of the other of the said elements when the stress of the said fluid pressure means is relieved, and means for separately controlling the said fluid pressure means.

In testimony whereof I have signed my name to this specification, on this 5th day of November, A. D. 1923.

JOHN NELSON.