J. E. OGDEN AND C. C. TOMKINSON.

TWO SECTION STRUT DOOR.

APPLICATION FILED JULY 16, 1917.

1,326,611. Patented Dec. 30, 1919.

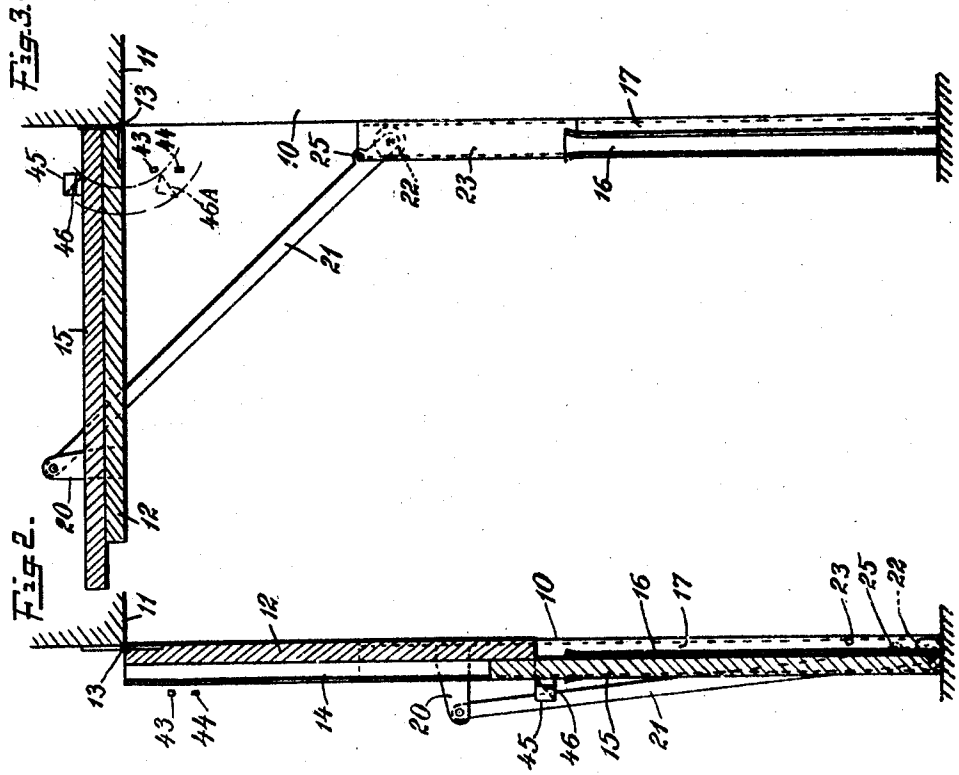

Fig. 3.

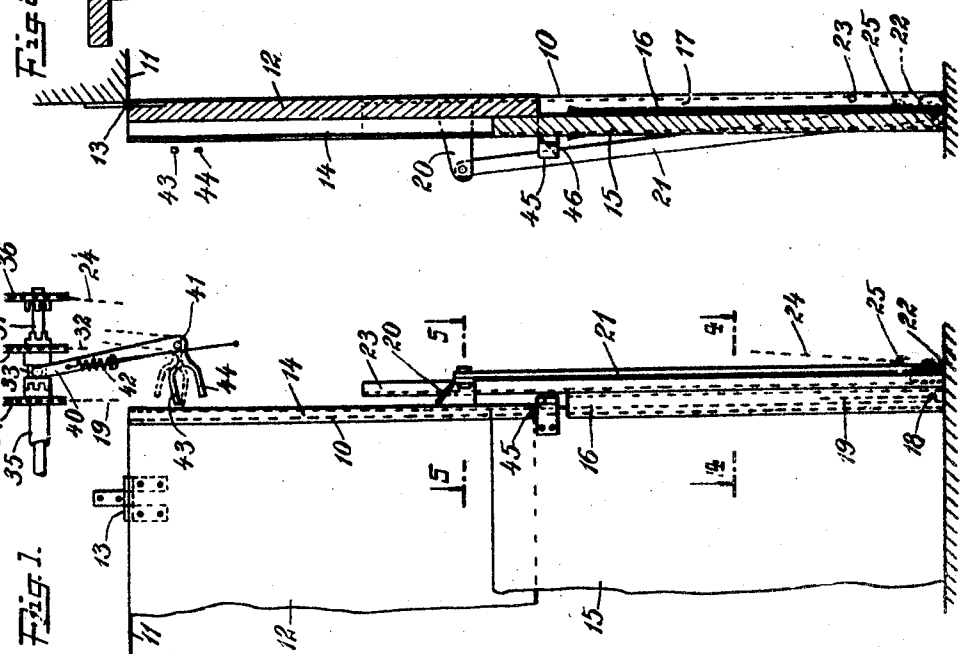

Fig. 2.

Fig. 1.

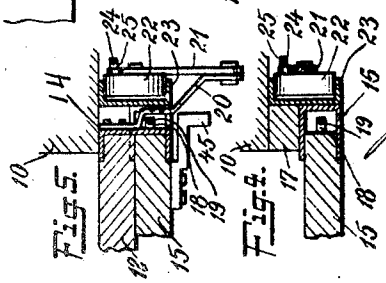

Fig. 5.

Fig. 4.

John Edward Ogden Inventor

By Charles C. Tomkinson

their Attorneys

Marshall & Dearborn

UNITED STATES PATENT OFFICE.

JOHN EDWARD OGDEN, OF CORNWALL, NEW YORK, AND CHARLES C. TOMKINSON, OF PLAINFIELD, NEW JERSEY; SAID TOMKINSON ASSIGNOR TO SAID OGDEN.

TWO-SECTION STRUT-DOOR.

1,326,611. Specification of Letters Patent. Patented Dec. 30, 1919.

Application filed July 16, 1917. Serial No. 180,744.

To all whom it may concern:

Be it known that we, JOHN EDWARD OGDEN, a citizen of the United States of America, and a resident of Mountainville, town of Cornwall, Orange county, and State of New York, and CHARLES C. TOMKINSON, a citizen of the United States, and a resident of Plainfield, Union county, and State of New Jersey, have invented certain new and useful Improvements in Two-Section Strut-Doors, of which the following is a specification, reference being had to the accompanying drawings, forming a part thereof.

Our invention relates to new and useful improvements in doors and especially to such as are adapted to close large openings such as those in pier sheds, warehouses, etc., and its object is to provide a two-section strut supported door which is simple in construction and operation.

Another object is to so construct the door that it will occupy but little space and need but little clearance in operation.

A still further object is to provide a door which will occupy but little head room, and which, when opened will be firmly supported and will give full clearance through the doorway.

In order that our invention may be thoroughly understood we will now proceed to describe the same in the following specification, and then point out the novel features thereof in appended claims.

Referring to the drawings:

Figure 1 is a front elevation of a portion of a door made according to and embodying our invention.

Fig. 2 is a sectional end elevation of the same door shown in its closed position.

Fig. 3 is a sectional end view of the door shown in its open position.

Fig. 4 is a sectional plan view of a part of the door, the section being taken on the line 4—4 of Fig. 1, and

Fig. 5 is a similar section taken on the line 5—5 of Fig. 1.

Like characters of reference designate corresponding parts in all the figures.

10 designates one of the side frames and 11 the lintel of a door opening. 12 is an upper door section, the upper edge of which is pivotally supported at the upper part of the door frame by hinges 13. On the vertical edges of this upper door section are channel irons 14 which serve as guides for a lower door section 15. Below and in alinement with these channel irons when the door is closed are stationary guides 16 for the lower door section supported on strips 17 on the side frames 10. 18 are projections from the lower corners of the lower door section to which hoisting chains 19 are attached.

Brackets 20 affixed to the edges of the upper door section pivotally support the upper ends of struts 21 on the lower ends of which are rollers 22 which run in vertical guides 23. Hoisting chains 24 are attached to the lower ends of the struts at 25.

30 is a pocket sheave loosely mounted on a transverse shaft 31, and 32 is a hand chain by means of which this sheave may be rotated. The ends of its hub form clutch members and a groove 33 is provided in it by means of which its position on the shaft may be shifted. 34 is a pocket sheave affixed to a sleeve 35 which surrounds shaft 31. The chain 19 runs over this sheave 34 and down to a counterweight (not shown). The end of its hub forms a clutch member by means of which the sheaves 30 and 34 may be locked together. 36 is another pocket sheave affixed to shaft 31. The chain 24 runs over it and down to a counterweight (not shown). The end of its hub forms a clutch member by means of which the sheaves 30 and 36 may be locked together.

It is to be understood that the other vertical edges of the door sections 12 and 15 are similarly provided with struts and hoisting chains. The shaft 31 and sleeve 35 extend to the other edge of the door and carry sheaves similar to sheaves 36 and 34 respectively by means of which the other hoisting chains are actuated.

40 is an arm pivoted at 41, the upper end of which is forked and fitted into the groove 33. By means of this arm the sheave 30 is shifted on shaft 31 and a spring 42 holds the clutch members on the ends of its hub in engagement with either the clutch member on the hub of sheave 34 or the clutch mem-

ber on the hub of sheave 36. 43 and 44 are spaced prongs which project normally from the arm 40 at either side of its pivot 41. These extend nearly to the adjacent edges of the door sections. A bracket 45 is affixed to the lower door section 15 in such a position as to engage the prongs 43 and 44 in the manner which we shall describe. The underside of this bracket is beveled as at 46.

We will now describe the operation of this apparatus. Let us assume that the door is closed as shown in Figs. 1 and 2, and that the sheaves 30 and 34 are locked together. A pull on hand chain 32 will rotate sheave 34 to raise door section 15 up back of door section 12. As its upper edge is about to reach the upper edge of section 12 the bracket 45 will engage prong 43 and thereby move arm 40 to the right to disengage sheave 30 from sheave 34 and the spring 42 will continue the movement of the arm until sheave 30 is in locking engagement with sheave 36.

With the parts in this condition a continued rotation of sheave 30 will be imparted to sheave 36 which through chain 24 will raise the lower end of strut 21 and this will swing the two door sections together inwardly until they reach a substantially horizontal position above the lintel 11 as shown in Fig. 3. In this position the struts will firmly support the door sections but will not in any way obstruct the door opening.

To close the door, the sheave 30 is rotated in the opposite direction causing the lower end of the struts to descend in the guides 23 and the door sections to swing down about hinges 13 into vertical positions. Just as they reach the vertical positions the beveled side of bracket 45 will reach the position in which it is indicated at 46A in dotted lines in Fig. 3, where it will engage prong 44 and shift sheave 30 out of engagement with sheave 36 and into engagement with sheave 34. Continued rotation of sheave 30 will lower section 15 into the stationary guides 16.

We have described the swinging movement of the doors as an inward movement, but if the parts to the left of the guides 16 and 23 are on the outside of the building, this will be an outward movement and the door sections will in this case form a canopy over the door opening when they are raised.

It is obvious that the lower section alone may be actuated when only a part of the headroom of the door opening is desired.

We do not intend to limit ourselves to the particular mechanism shown and described as illustrative of this invention, and in fact intend no limitations other than those imposed by the appended claims.

It is to be understood that in using the expression vertically raising or guiding the lower end of the struts in the claims, we intend it only as a substantially vertical movement, that is, a movement which is substantially normal to the fully opened positions of the door sections.

What I claim is:

1. An upper door section pivotally supported above a door opening, a lower door section, guide connections between the sections to provide for the lower section being raised up beside the upper door section, hoisting means having a vertical movement operating from the beginning of its lift to swing the upper door section upwardly, and comprising lift connections and struts pivoted at their upper ends to said upper section at points offset to one side of the line of lift of said lifting connections and engaged with said lifting connections at their lower ends.

2. An upper door section pivotally supported above a door opening, guides thereon, a lower door section slidable in said guides, hoisting means having a vertical movement operating from the beginning of its lift to swing the upper section upwardly, and comprising hoisting chains, and struts pivoted at their upper ends to the edges of said section, at points outside the line of pull of the hoisting chains and connected with said hoisting chains at their lower ends, said struts being arranged to support the door sections in their swung position without obstructing the door opening.

3. An upper door section pivotally supported above a door opening, guides thereon, a lower section slidable in said guides, hoisting means comprising chains having a vertical movement, said means operating from the beginning of its lift to swing the upper section upwardly and struts pivoted at their upper ends to said upper section at points outside the line of pull of the hoisting chains and to the hoisting chains at their lower ends, and vertical guides for the lower ends of said struts.

4. An upper door section pivotally supported above a door opening, guides thereon, a lower door section slidable in said guides, downwardly extending struts, pivotal connections between the upper ends of said struts and the edges of the upper door section, vertical guides for the lower ends of said struts, means for raising the lower door section up beside the upper door section, other means for vertically raising the lower ends of the struts to thereby swing the door sections about said pivotal support, actuating mechanism for both of said means for hoisting the lower door section and the struts, and automatic means for shifting said actuating mechanism from the means for hoisting the lower door section to the means for hoisting the struts.

5. An upper door section pivotally supported above a door opening, guides thereon, a lower door section slidable in said guides, downwardly extending struts, pivotal connections between the upper ends of said struts and the edges of the upper door section, vertical guides for the lower ends of said struts, a chain connected with the lower door section, another chain connected with the struts, actuating mechanism for both of said chains, and automatic means for shifting said actuating mechanism from the door section chain to the strut chain during the opening operation, and for shifting said actuating mechanism from the strut chain to the door section chain during the closing operation.

6. An upper door section pivotally supported above a door opening, guides thereon, a lower door section slidable in said guides, downwardly extending struts, pivotal connections between the upper ends of said struts and the edges of the upper door section, vertical guides for the lower ends of said struts, a chain connected with the lower door section, a sheave therefor, a chain connected with the struts, a strut chain sheave, an actuating sheave between the aforesaid chain sheaves, means for locking the actuating sheave to either of the chain sheaves, and automatic means for changing the locking connection of the actuating sheave from one to the other of the chain sheaves.

7. An upper door section pivotally supported above a door opening, guides thereon, a lower door section slidable in said guides, downwardly extending struts, pivotal connections between the upper ends of said struts and the edges of the upper door section, vertical guides for the lower ends of said struts, a chain connected with the lower door section, a sheave therefor, a chain connected with the struts, a strut chain sheave, an actuating sheave between the aforesaid chain sheaves, means for locking the actuating sheave to either of the chain sheaves, automatic means for changing the locking connection of the actuating sheave from one to the other of the chain sheaves, said automatic means being arranged to be actuated by the sliding movement of the lower door section as it completes said sliding movement during the opening operation of the door, and by the swinging movement of the door sections as they complete said swinging movement during the closing movement of the door.

8. An upper door section pivotally supported above a door opening, a lower door section, guide connections between the sections to provide for the lower section being raised up beside the upper door section, downwardly extending struts pivotally connected at their upper ends with the edges of the upper door section, hoisting chains connected with the lower ends of the struts for vertically raising said lower ends thereof to thereby swing the door sections about said pivotal support, and means for causing said raising of the lower ends of the struts at the beginning of the lift of said chains to break in the door sections, including brackets on the upper door section and to which the upper ends of the struts are pivoted in a plane well outside the line of pull of the hoisting chains.

9. An upper door section pivotally supported above a door opening, guides thereon, a lower door section slidable in said guides, downwardly extending struts, pivotal connections between the upper ends of said struts and the edges of the upper door section, vertical guides for the lower ends of said struts, actuating mechanism for raising the lower door section up beside the upper door section and for vertically raising the lower ends of the struts to thereby swing the door sections about said pivotal support, and means for connecting the operation of said actuating mechanism from the lifting of the lower door section to the raising of the struts when the lower door section has been moved to its position beside the upper door section.

10. An upper door section pivotally supported above a door opening, guides thereon, a lower door section slidable in said guides, downwardly extending struts, pivotal connections between the upper ends of said struts and the edges of the upper door section, vertical guides for the lower ends of said struts, actuating mechanism for raising the lower door section up beside the upper door section and for vertically raising the lower ends of the struts to thereby swing the door sections about said pivotal support, and means including a shifting connection actuated by the lower door section for converting the operation of said actuating mechanism from the lifting of the lower door section to the raising of the struts when said lower door section has been moved to its position beside the upper door section.

11. An upper door section pivotally supported above a door opening, a lower door section, guide connections between the sections to provide for the lower section being raised up beside the upper door section and hoisting mechanism for said door sections, comprising hoisting chains for lifting the lower door section into position beside the upper door section, hoisting chains for the upper door section, brackets on the back of the upper door section, struts pivoted at their upper ends to said brackets on centers outside the line of pull of the hoisting

chains for said upper section and connected at their lower ends with said hoisting chains for the upper door section and means for first operating the hoisting chains for the lower door section and for then operating the hoisting chains for the upper door section as the lower door section is brought into position beside the upper door section.

In witness whereof we have hereunto set our hands this 13th day of July, 1917.

J. EDWARD OGDEN.
CHARLES C. TOMKINSON.

Witnesses:
I. B. MOORE,
D. E. DENTOCH.