675538 AMENDED

The Commissioner of Patents
PO Box 200
WODEN ACT 2606



F B RICE & CO
SYDNEY NSW
Speed Dial 511

PATENTS

Our Ref: 64141

AUSTRALIA
Patents Act 1990
PATENT REQUEST: STANDARD PATENT

We, ESSELTE NV being the person(s) identified below as the Applicant, request the grant of a standard patent to the person identified below as the Nominated Person, for an invention described in the accompanying complete specification.

Full application details follow.

Applicant and Nominated Person:	ESSELTE NV a company incorporated in Belgium
Address:	Industriepark-Noord 30, PO Box 85, B-2700 St Niklaas Belgium
Invention Title:	A cassette for a thermal printer
Name(s) of Actual Inventor(s):	Robert Charles Lewis DAY; Richard William WARE
Address for Service in Australia: Attorney Code: RI	F B RICE & CO 28A Montague St BALMAIN NSW 2041

BASIC CONVENTION APPLICATION(S) DETAILS

Application No	Country	Country Code	Date of Application
9314386.5	United Kingdom	GB	12 July 1993

Dated this thirteenth day of August 1996

ESSELTE NV

By: _____
FRED SCHILLING
Registered Patent Attorney

GRB/dkc/h13

AUSTRALIA

Patents Act 1990

NOTICE OF ENTITLEMENT

I (~~We~~) BREPOELS Cor
authorised by ESSELTE DYMO N.V.
of Industriepark-Noord 30, PO Box 85, B-2700 St. Niklaas, BELGIUM

the applicant and nominated person in respect of an application for a patent for an invention entitled A cassette for a thermal printer

filed under Australian Application No. 67332/94 , state the following:

PART 1 - *Must be completed for all applications.*
The person(~~s~~) nominated for the grant of the patent
[ ] ~~is (are) the actual inventor~~(s)
~~or~~
[X] has, for the following reasons, gained entitlement from the actual inventor(s)
Technology Partnership Limited is a person who would if a patent were granted upon an application made by the actual inventor(s) be entitled to have the patent assigned to it and by virtue of an agreement with Technology Partnership Limited, Esselte Dymo N.V. is entitled to the invention

---

PART 2 - *Must be completed if the application is a Convention application.*
The person(~~s~~) nominated for the grant of the patent is (~~are~~):
[X] the applicant(~~s~~) of the basic application(~~s~~) listed on the patent request form
~~or~~
[ ] ~~entitled to rely on the basic application(s) listed on the patent request form by reason of the following~~:

The basic application(s) listed on the request form is (~~are~~) the first application(~~s~~) made in a Convention country in respect of the invention.

PART 3 - *Must be completed if the application was made under the PCT and claims priority.*
The person(s) nominated for the grant of the patent is (are):
[ ] the applicant(s) of the application(s) listed in the declaration under Article 8 of the PCT
or
[ ] entitled to rely on the application(s) listed in the declaration under Article 8 of the PCT by reason of the following:

The basic application(s) listed in the declaration made under Article 8 of the PCT is (~~are~~) the first application(s) made in a Convention country in respect of the invention.

Dated this 13th day of September 19 94

Signed  Status Managing Director

Signatory's Name BREPOELS Cor

F.B. RICE & CO PATENT ATTORNEYS

AU9467332

(12) PATENT ABRIDGMENT (11) Document No. AU-B-67332/94
(19) AUSTRALIAN PATENT OFFICE (10) Acceptance No. 675538

(54) Title
A CASSETTE FOR A THERMAL PRINTER

(51)[5] International Patent Classification(s)
B41J 032/00

(21) Application No. : 67332/94 (22) Application Date : 07.07.94

(30) Priority Data

(31) Number	(32) Date	(33) Country
9314386	12.07.93	GB UNITED KINGDOM

(43) Publication Date : 19.01.95

(44) Publication Date of Accepted Application : 06.02.97

(71) Applicant(s)
ESSELTE NV

(72) Inventor(s)
ROBERT CHARLES LEWIS DAY; RICHARD WILLIAM WARE

(74) Attorney or Agent
F B RICE & CO , 28A Montague Street, BALMAIN NSW 2041

(57) Claim

1. A tape holding case for a thermal printer comprising:

a wall defining a zone in which is located a supply of image receiving tape having an image receiving layer and a backing layer;

an outlet through which the image receiving tape can be fed out;

a portion of said wall positioned adjacent to the outlet and arranged to support the image receiving tape during cutting; and

a slot defined in the wall portion, said slot situated beneath the tape and extending across the width of the tape, said slot being arranged to receive a blade that has cut through the whole thickness of the image receiving layer and the backing layer to cut off a portion of the image receiving tape.

12. In combination a tape holding case for a thermal printer comprising:

a wall defining a zone in which is located a supply of image receiving tape having an image receiving layer and a backing layer;

an outlet through which the image receiving tape can be fed out;

a portion of said wall positioned adjacent to the outlet and arranged to support the image receiving tape during cutting; and

.../2

a slot defined in the wall portion, said slot situated beneath the tape and extending across the width of the tape, said slot being arranged to receive a blade that has cut through the whole thickness of the image receiving layer and the backing layer to cut off a portion of the image receiving tape,

and,

a printing device comprising:

a print head;

a cutting mechanism including a cutter support member comprising a blade;

means for bringing the blade into the slot through the whole thickness of the tape during cutting to cut-off a portion of the tape; and

a platen rotatable to feed tape out of the tape holding case, said platen also cooperating with the print head when printing on the image receiving tape.

AUSTRALIA

Patents Act 1990

~~ESSELTE DYMO N.V.~~
Esselte NV

AUSTRALIAN PATENT OFFICE SEC. 104

ORIGINAL
COMPLETE SPECIFICATION
STANDARD PATENT

Invention Title:

"A cassette for a thermal printer"

The following statement is a full description of this invention including the best method of performing it known to us:-

The present invention relates to a cassette for a thermal printer, and to a thermal printer in combination with such a cassette.

Thermal printers of the type with which the present invention is concerned are known. They operate with a supply of tape arranged to receive an image and a means for transferring image onto the tape. In one form, a tape holding case or cassette holds a supply of image receiving tape and a supply of an image transfer ribbon, the image receiving tape and transfer ribbon being passed in overlap through a printing zone of the printing device. A printing device operating with a tape holding case of this type is described for example in EP-A-0267890 (Varitronics, Inc.). Other printing devices have been made in which letters are transferred to an image receiving tape by a dry lettering or dry film impression process. In all of these printing devices, the construction of the image receiving tape is substantially the same. That is, it comprises an upper layer for receiving an image which is secured to a releasable backing layer by a layer of adhesive. Once an image or message has been printed on the tape, it is desired to cut off that portion of the tape to enable it to be used as a label. For this purpose, it is necessary to remove the releasable backing layer from the upper layer to enable the upper layer to be secured to a surface by means of the adhesive layer. In EP-A-0267890 scissors are used to cut off the tape.

In another type of printing device described for example in EP-A-0322919 (Brother) a tape holding case holds a supply of image receiving tape, a supply of an image transfer ribbon and a supply of adhesive backing tape. The adhesive backing tape has an adhesive layer for contact with the image receiving tape, a substrate layer and a second adhesive layer covered by a releasable backing layer. The characters are printed onto

the image receiving tape, which is transparent, as a mirror image.

In a further printing device, described for example in EP-A-0487313 (Esselte Dymo N.V.), a tape holding case holds a supply of image receiving tape and a supply of image transfer ribbon, the image receiving tape having the same construction as described above with reference to EP-A-0267890. In this device, the cassette includes a feed roller which is rotatably mounted and which cooperates with an output roller of a printing device into which the cassette is inserted to feed the image receiving tape out of the printing device after printing has taken place. After the tape has been fed out of the cassette, the printed portion of the tape is cut off by a cutting mechanism located outside the cassette boundary. A similar arrangement is utilised in EP-A-0322919. EP-B-0364305 describes a cassette which has a portion extending beyond the feed roller to provide an anvil for a cutting blade.

In both of these devices, printing is carried out at a print location defined by a thermal print head and a platen against which the print head presses the image receiving tape and image transfer ribbon during printing. The image receiving tape is then fed past the print location by the feed mechanism comprising the feed roller of the cassette and the output roller of the printing device to a cutting mechanism located outside the cassette boundary. Thus, the distance from the print location to the cutting mechanism can be of the order of 23-25mm and this defines the blank lead portion of a label. It is desirable to reduce the blank lead portion of a label to avoid wasted blank tape and to improve the appearance of labels. Various methods have been proposed to reduce these leaders, all of which methods have involved the use of software control of the way in which the image receiving tape is printed and fed out. In one aspect, the present invention seeks to provide a reduced length of blank tape on a label without the need for complex software control.

Another disadvantage arising from the printing devices of EP-A-0322919, EP-B-0364305 and EP-A-0487313 is that the tape is cut off using a blade which is brought into contact with the tape while it is supported by an anvil. Not only does the action of a blade against an anvil require a significant amount of cutting force to be applied, but it also results in the wear of cutting blades and a need for their replacement during the life of the printer. Another aspect of the present invention provides a solution to these problems.

Finally, the invention seeks to provide a cassette which can be used in a variety of different types of printing devices.

According to one aspect of the present invention there is provided a tape holding case for a thermal printer comprising:

a wall defining a zone in which is located a supply of image receiving tape having an image receiving layer and a backing layer;

an outlet through which the image receiving tape can be fed out;

a portion of said wall positioned adjacent to the outlet and arranged to support the image receiving tape during cutting; and

a slot defined in the wall portion, said slot situated beneath the tape and extending across the width of the tape, said slot being arranged to receive a blade that has cut through the whole thickness of the image receiving layer and the backing layer to cut off a portion of the image receiving tape.

This arrangement avoids the use of an anvil for cutting. It has been found that the cutting force required to make a cut is significantly reduced, as is the wear of the blade.

Preferably the cassette has no feed roller, and said wall portion is shaped to cooperate with an output roller of a printing device into which the cassette is inserted to feed tape out of the cassette.

Such a cassette is suited for use in a printing device having an output roller. Such a cassette is also suitable for use in a printing device which has no output roller but which instead has a rotatable platen which not only supports the tape during printing but also is driven to feed the tape out of the cassette. The wall portion can be flat or can provide at least one stepped portion over which the tape can be bent during cutting.

Thus, in a second aspect, the invention provides a tape holding case for a thermal printer comprising:

AUSTRALIAN PATENT OFFICE

a supply of image receiving tape having an image receiving layer and a backing layer;

an outlet through which the image receiving tape can be fed out;

a wall portion positioned adjacent to the outlet and arranged to support the image receiving tape during cutting; and

a slot defined in the wall portion said slot situated beneath the tape and extending across the width of the tape, said slot being arranged to receive a blade that has cut through the whole thickness of the image receiving layer and the backing layer to cut off a portion of the image receiving tape wherein said wall portion includes at least one stepped portion located on the side of the slot away from the outlet over which the tape can be bent during cutting.

The invention also contemplates a printing device with an afore-defined cassette, which printing device has a cutting mechanism located opposite said slot and which comprises a platen rotatable to feed tape out of the cassette, said platen also cooperating with a print head for printing onto the tape. In such a device, no separate output roller is provided and so the distance between the print location (defined between the platen and the print head) and the cutting location (at the slot) can be minimised, thereby to minimise blank leaders on a label.

Thus, in a third aspect the invention provides in combination a tape holding case for a thermal printer comprising:

a wall defining a zone in which is located a supply of image receiving tape having an image receiving layer and a backing layer;

an outlet through which the image receiving tape can be fed out;

a portion of said wall positioned adjacent to the outlet and arranged to support the image receiving tape during cutting; and

a slot defined in the wall portion, said slot situated beneath the tape and extending across the width of the tape, said slot being arranged to receive a blade that has cut through the whole thickness of the image receiving layer and the backing layer to cut off a portion of the image receiving tape; and,

a printing device comprising:

a print head;

a cutting mechanism including a cutter support member comprising a blade;

AUSTRALIAN PATENT OFFICE

means for bringing the blade into the slot through the whole thickness of the tape during cutting to cut-off a portion of the tape; and

a platen rotatable to feed tape out of the tape holding case, said platen also cooperating with the print head when printing on the image receiving tape.

Preferably the cassette also holds a supply of image transfer ribbon wound between supply and take-up spools.

According to another aspect of the present invention there is provided in combination a tape holding case for a thermal printer comprising:

a supply of image receiving tape having an image receiving layer and a backing layer;

an outlet through which the image receiving tape can be fed out;

a wall portion positioned adjacent to the outlet and arranged to support the image receiving tape during cutting; and

a slot defined in the wall portion said slot situated beneath the tape and extending across the width of the tape, said slot being arranged to receive a blade that has cut through the whole thickness of the image receiving layer and the backing layer to cut off a portion of the image receiving tape wherein said wall portion includes at least one stepped portion located on the side of the slot away from the outlet over which the tape can be bent during cutting; and,

a printing device comprising:

a print head;

a cutting mechanism including a cutter support member comprising a blade;

means for bringing the blade into the slot through the whole thickness of the tape during cutting to cut-off a portion of the tape, the tape being bent over the stepped portion of the wall portion of the tape holding case during cutting; and

a platen rotatable to feed tape out of the tape holding case, said platen also cooperating with the print head when printing on the image receiving tape.

As discussed in our Australian Patent Application No 37023/93 when the image receiving tape comprises an image receiving layer secured to a backing layer via adhesive, bending of the tape causes the backing layer to

AUSTRALIAN PATENT OFFICE

separate from the image receiving layer due to a difference in their resilience. It is particularly advantageous to provide a so-called peel feature as part of the cassette wall. In this, case the cassette wall portion can be shaped to cooperate with an output roller of a printing device to increase its versatility.

For a better understanding of the present invention, and to show how the same may be carried into effect, reference will now be made by way of example to the accompanying drawings in which:

Figures 1 to 3 show a printing device with a cassette inserted therein with the cutting mechanism in various stages of operation;

Figure 4 is a more detailed view of the cutting mechanism;

Figures 4a and 4b are a plan view and a side view respectively of a blade;

Figure 5 illustrates how the blank leader of a label is reduced using a cassette of the present invention;

Figure 6 is a plan view showing the cassette of the invention inserted into an alternative type of printing device;

Figure 7 is a sketch showing cooperation of an output roller of a printing device with the cassette wall; and

Figure 8 is a sketch showing cooperation of an output roller of a printing device with an idle roller of the cassette.

AUSTRALIAN PATENT OFFICE

Figure 1 illustrates in plan view a cassette bay of a printing device. The cassette bay is shown by the dotted line 2. The cassette bay includes a thermal print head 4 and a platen 6 which cooperate to define a print location P in a manner which is known in the art. The print head 4 is pivotable about a pivot point 8 so that it can be brought into contact with the platen 6 for printing and moved away from the platen to enable a cassette to be removed and replaced.

A cassette inserted into the cassette bay 2 is denoted generally by reference numeral 10. The cassette holds a supply spool 12 of image receiving tape 14 which comprises an image receiving layer secured to a backing layer by a layer of adhesive. The image receiving tape 14 is guided by a guide mechanism (which is not shown) through the cassette, out of the cassette through an outlet O, past the print location P to a cutting location C. The cassette 10 also has an ink ribbon supply spool 16 and an ink ribbon take up spool 18. The ink ribbon 20 is guided from the ink ribbon supply spool 16 through the print location P and taken up on the ink ribbon take up spool 18. The image receiving tape 14 passes in overlap with the ink ribbon 20 through the print location P with its image receiving layer in contact with the ink ribbon.

In the printing device illustrated in Figure 1, the platen 6 is driven so that it rotates to drive the image receiving tape 14 past the print location P during printing. In this way, tape is printed and fed out from the print location P to the cutting location C. In contrast to earlier devices, the cutting location C is provided at a location on a portion of the wall of the cassette 10 which is close to the print location P. As the tape is fed out of the cassette by driving the platen 6, there is no need for a further feed mechanism for the tape and this enables the cutting location C to be closer to the print location P. In the described embodiment, as illustrated in Figure 5, the distance d between the cutting location and the print location can be 9mm. The portion of

the wall of the cassette 10 where the cutting location C is defined is denoted by reference numeral 22. A slot 24 is defined in this wall portion and the image receiving tape 14 is fed past the print location P to the cutting location C where it is supported by facing wall portions 22a,22b on either side of the slot 24 (see Figure 2).

The printing device includes a cutting mechanism denoted generally by reference numeral 26. This cutting mechanism includes a cutter support member 28 which carries a blade 30. The design of the blade 30 can be seen more clearly in Figure 4a and 4b. The blade 30 has a sharpened and angled cutting edge 31. In Figure 4a the dimension x is 6mm and y is 13mm. Holes 30a are provided to enable the blade 30 to be mounted in the cutter support member. In Figure 4b, the dimension z is .70mm. These dimensions are only exemplary - any suitable blade can be used. The blade 30 cuts the image receiving tape 14 and then enters the slot 24 with the leading part 31a of its edge 31 first, rather than bearing against an anvil. The detailed operation of the cutting mechanism is discussed later. However, it is appropriate to point out here that the inventors have found that there are significant advantages to cutting into a slot rather than against an anvil. The amount of force which is required to cut the tape is significantly reduced, and this reduces the cost of the product and the amount of space required for the cutting mechanism. Particularly when considering automated cutting mechanisms, the large amount of force required to cut a tape against an anvil have required complex gearing mechanisms giving a substantial mechanical advantage which has utilised space in the product. Thus, although the cutting mechanism described herein is intended to be manually operated, the concept of cutting into a slot would also have advantages in an automated cutting system.

Furthermore, as the blade cuts into a slot rather than against an anvil, there is no anvil which can wear out and also the

life of the blade is increased. This makes it possible to design a cutting mechanism where the blade does not need to be replaced over the life of the printer.

Figure 4 shows the cutting mechanism 26 in more detail. The cutting mechanism comprises with the cutter support member 28 a tape clamp 32. The cutter support member 28 is mounted for movement within a slot 34 in the tape clamp 32. The portion 22 of the cassette wall 10 defining the cutting location C has adjacent one of the facing surfaces 22a a stepped portion 36 which cooperates with a stepped portion 38 in the tape clamp 32 in a manner which will be described more clearly hereinafter. A relatively weak spring 40 is located between a ledge 42 of the tape clamp 32 and a cooperating ledge 44 of the casing 2. A relatively stiff spring 46 is located in a recess 48 of the tape clamp 32 to act against the cutter support member 28. The cutter support member provides a surface which is preferably formed in the shape of a button 50 or the like and which can be depressed by a user using manual force.

Figure 1 shows the cutting mechanism in its ready to cut state, that is with the blade 30 spaced from the tape 14 and a lower surface 38a of the tape clamp 32 just clear of the tape 14. This permits the leading edge of the tape to be driven past the lower surface 38a without excessive risk of catching on it or being deflected by it. When the button 50 is depressed, the relatively weak spring 40 is compressed first against the ledge 44 as shown in Figure 2 and causes the tape clamp 32 to hold the tape 14 against the surfaces 22a,22b thereby clamping the tape 14 against the cassette on both sides of the slot, ensuring that the tape does not move sideways during subsequent cutting and that the cut edge is square. The stepped portion 36 of the cassette wall cooperates with the stepped portion 38 of the tape clamp 32 to bend the tape against the stepped portion 38 of the tape clamp, the backing layer of the tape being adjacent the

stepped portion 38. The blade 30 is simultaneously caused to be lowered until it is just in contact with the tape 14. As the button 50 is further depressed, the relatively stiff spring 46 is compressed to cause the cutter support member 28 to move relative to the tape clamp 32 to cause the blade 30 to cut the tape 14. This then provides a portion of tape with a bent portion just behind the cut trailing edge. When the button 50 is released, the cutting mechanism is in its ready-to-cut position under the action of the springs.

In this arrangement, not only does the cutting mechanism have the advantage of providing a cut through the tape into a slot, but it also leaves the trailing edge of the label with a bent part providing a so-called "easy to peel" feature. This is discussed in more detail in our copending Australian Application No. ~~(Page White & Farrer~~ 37093/93 the contents of which are herein incorporated by reference. Briefly, the bend in the tape causes the backing layer to separate from the image receiving layer as a result of their differences in resilience so as to enable a user to peel the backing layer from the image receiving layer more easily.

Figure 6 illustrates a further advantage of the cassette described herein. In Figure 6, reference numeral 102 denotes the casing of a cassette bay of a printing device which is different to the printing device described above with reference to Figure 1 to 5. The printing device in Figure 6 is of the type discussed above with reference to EP-A-0487313. In this printing device, feeding of the tape 14 is accomplished not by driving the platen 6 but by an output roller such as that denoted by reference numeral 104 in Figure 6. Conventionally, this output roller 104 cooperates with a feed roller which is arranged in the cassette to pinch the tape between it and the output roller and thereby to enable the tape to be fed out of the cassette. A cutting mechanism which is indicated diagrammatically only in Figure 6 and designated by reference numeral 106 is located beyond the

AUSTRALIAN PATENT OFFICE

output location. The cassette described herein can be used in a printing device as illustrated in Figure 6 even though it does not have a feed roller. The facing surfaces 22a,22b cooperate with the output roller 104 to enable tape to be fed out if the output roller 104 is driven. This is possible since the friction between the roller and the tape exceeds the friction between the tape and the facing surface. Thus, the cassette described herein can be used in the printing device described above with reference to Figures 1 to 5 or the printing device of Figure 6, and is thus more versatile than its predecessors.

Furthermore, the cassette provides in its wall a stepped portion 36 which cooperates with a stepped portion 38 in the tape clamp to bend the tape and thus facilitate separation between the backing layer and image receiving layer.

Figure 7 illustrates more clearly cooperation of the wall portion 22 of the cassette with an output roller 104 of a printing device as shown in Figure 6.

Aspects of the invention can also be applied where the cassette includes an idler roller which is intended to cooperate with the output roller 104 of a printing device, and this embodiment is shown in Figure 8 where reference numeral 200 denotes the idler roller of the cassette.

THE CLAIMS DEFINING THE INVENTION ARE AS FOLLOWS:

1. A tape holding case for a thermal printer comprising:

a wall defining a zone in which is located a supply of image receiving tape having an image receiving layer and a backing layer;

an outlet through which the image receiving tape can be fed out;

a portion of said wall positioned adjacent to the outlet and arranged to support the image receiving tape during cutting; and

a slot defined in the wall portion, said slot situated beneath the tape and extending across the width of the tape, said slot being arranged to receive a blade that has cut through the whole thickness of the image receiving layer and the backing layer to cut off a portion of the image receiving tape.

2. A tape holding case according to claim 1 wherein said wall portion is shaped to cooperate with an output roller of a printing device into which the tape holding case is inserted to feed tape out of the tape holding case.

3. A tape holding case according to claim 2 wherein the wall portion is flat.

4. A tape holding case according to claim 1 which includes an idler roller for cooperating with an output roller of a printing device into which the tape holding case is inserted to feed tape out of the tape holding case.

5. A tape holding case according to claim 1 wherein said wall portion includes at least one stepped portion located on the side of the slot away from the outlet over which the tape can be bent during cutting.

6. A tape holding case according to claim 1 which also holds a supply of image transfer ribbon wound between supply and take-up spools.

7. A tape holding case for a thermal printer comprising:

AUSTRALIAN PATENT OFFICE

a supply of image receiving tape having an image receiving layer and a backing layer;

an outlet through which the image receiving tape can be fed out;

a wall portion positioned adjacent to the outlet and arranged to support the image receiving tape during cutting; and

a slot defined in the wall portion said slot situated beneath the tape and extending across the width of the tape, said slot being arranged to receive a blade that has cut through the whole thickness of the image receiving layer and the backing layer to cut off a portion of the image receiving tape wherein said wall portion includes at least one stepped portion located on the side of the slot away from the outlet over which the tape can be bent during cutting.

8. A tape holding case according to claim 7 wherein said wall portion is shaped to cooperate with an output roller of a printing device into which the tape holding case is inserted to feed tape out of the tape holding case.

9. A tape holding case according to claim 8 wherein the wall portion is flat.

10. A tape holding case according to claim 7 which includes an idler roller for cooperating with an output roller of a printing device into which the tape holding case is inserted to feed tape out of the tape holding case.

11. A tape holding case according to claim 7 which also holds a supply of image transfer ribbon wound between supply and take-up spools.

12. In combination a tape holding case for a thermal printer comprising:

a wall defining a zone in which is located a supply of image receiving tape having an image receiving layer and a backing layer;

an outlet through which the image receiving tape can be fed out;

AUSTRALIAN PATENT OFFICE

a portion of said wall positioned adjacent to the outlet and arranged to support the image receiving tape during cutting; and

a slot defined in the wall portion, said slot situated beneath the tape and extending across the width of the tape, said slot being arranged to receive a blade that has cut through the whole thickness of the image receiving layer and the backing layer to cut off a portion of the image receiving tape,

and,

a printing device comprising:

a print head;

a cutting mechanism including a cutter support member comprising a blade;

means for bringing the blade into the slot through the whole thickness of the tape during cutting to cut-off a portion of the tape; and

a platen rotatable to feed tape out of the tape holding case, said platen also cooperating with the print head when printing on the image receiving tape.

13. An apparatus as claimed in claim 12 wherein the cutting mechanism of the printing device includes a tape holding surface located and positioned to hold the tape during cutting.

14. An apparatus as claimed in claim 13 wherein the printing device is adapted to hold the tape at both sides of the slot during cutting.

15. An apparatus as claimed in claim 14 wherein the cutting mechanism comprises a tape clamp adapted to hold the tape on both sides of said slot, against the wall portion of the tape holding case during cutting.

16. An apparatus as claimed in any one of claims 12 to 15 wherein the wall portion of said tape holding case has a tape bending surface, over which the tape is bent during cutting.

17. An apparatus as claimed in claim 16 wherein the cutting mechanism comprises a tape bending member capable of relative movement with respect to the tape bending surface to cause the

AUSTRALIAN PATENT OFFICE

tape to bend before it is cut.

18. An apparatus as claimed in claim 16 or 17 wherein said wall portion of the tape holding case has a stepped portion over which the tape passes and which provides said tape bending surface.

19. An apparatus as claimed in claim 12 wherein the cutting mechanism comprises a tape clamp capable of relative movement with respect to the wall portion of the tape holding case, the tape clamp incorporating a tape bending member, for cooperation with a tape bending surface in the wall portion of the tape holding case to bend the tape during cutting, and defining a tape holding surface, wherein the tape, being supported by the wall portion of the tape holding case, is held on one side of the slot by the tape holding surface and on the other side of the slot by the tape bending member, during cutting.

20. An apparatus as claimed in claim 12 wherein the cutting mechanism comprises a tape clamp capable of relative movement with respect to the wall portion of the tape holding case, the tape clamp incorporating a tape bending member with a stepped portion for cooperating with a stepped portion in the wall portion of the tape holding case to bend the tape during cutting.

21. An apparatus as claimed in claim 12 wherein the cutting mechanism comprises a tape clamp capable of relative movement with respect to the wall portion of the tape holding case, the tape clamp incorporating a tape bending member with a stepped portion provided for cooperation with a stepped portion of a tape bending surface in the wall portion of the tape holding case to bend the tape during cutting, and defining a tape holding surface, wherein the tape, being supported by the wall portion of the tape holding case, is held on one side of the slot by the tape holding surface and on the other side of the slot by the tape bending member, during cutting.

22. An apparatus as claimed in any one of claims 16 to 21 wherein the tape bending surface is located on the far side of the slot relative to the direction of movement of the tape.

AUSTRALIAN PATENT OFFICE

23. In combination a tape holding case for a thermal printer comprising:

a supply of image receiving tape having an image receiving layer and a backing layer;

an outlet through which the image receiving tape can be fed out;

a wall portion positioned adjacent to the outlet and arranged to support the image receiving tape during cutting; and

a slot defined in the wall portion said slot situated beneath the tape and extending across the width of the tape, said slot being arranged to receive a blade that has cut through the whole thickness of the image receiving layer and the backing layer to cut off a portion of the image receiving tape wherein said wall portion includes at least one stepped portion located on the side of the slot away from the outlet over which the tape can be bent during cutting;

and,

a printing device comprising:

a print head;

a cutting mechanism including a cutter support member comprising a blade;

means for bringing the blade into the slot through the whole thickness of the tape during cutting to cut-off a portion of the tape, the tape being bent over the stepped portion of the wall portion of the tape holding case during cutting; and

a platen rotatable to feed tape out of the tape holding case, said platen also cooperating with the print head when printing on the image receiving tape.

24. An apparatus as claimed in claim 23, wherein the cutting mechanism of the printing device includes a tape holding surface located and positioned to hold the tape during cutting.

25. An apparatus as claimed in claim 23 or 24 wherein the printing device is adapted to hold the tape at both sides of the slot during cutting.

26. An apparatus according to any one of claims 23 to 25 wherein said cutting mechanism comprises a tape clamp having a stepped

AUSTRALIAN PATENT OFFICE

portion for cooperation with the stepped portion of the wall portion of the tape holding case to bend the tape during cutting.

27. An apparatus according to anyone of claims 23 to 25 wherein said cutting mechanism comprising a tape clamp adapted to hold the tape on both sides of said slot against the support surface, during cutting.

28. An apparatus according to any one of claims 23 to 25 wherein said cutting mechanism comprises a tape clamp, capable of relative movement with respect to the tape support surface, having a tape bending member with a stepped portion for cooperation with the stepped portion of the wall portion of the tape holding case to bend the tape during cutting, the tape clamp defining the holding surface, wherein the tape, being supported by the tape support surface, is held on one side of the slot by the tape holding surface and on the other side of slot by the tape bending member, during cutting.

29. An apparatus according to any one of claims 23 to 28, wherein the stepped portion of the wall portion of the tape holding case is located on the far side of the slot relative to the direction of movement of the tape.

Dated this 29th day of November 1996.

ESSELTE NV

Patent Attorneys for the Applicant:

F B RICE & co

AUSTRALIAN PATENT OFFICE

ABSTRACT

A tape holding case is described for use with a thermal printing device which allows for more efficient cutting and feeding of tape. The cassette has a slot into which a cutting blade can pass which avoids the use of an anvil for cutting. Moreover, the cassette can have a stepped portion for providing a so-called "peel cut" at the end of the tape.

FIG. 1

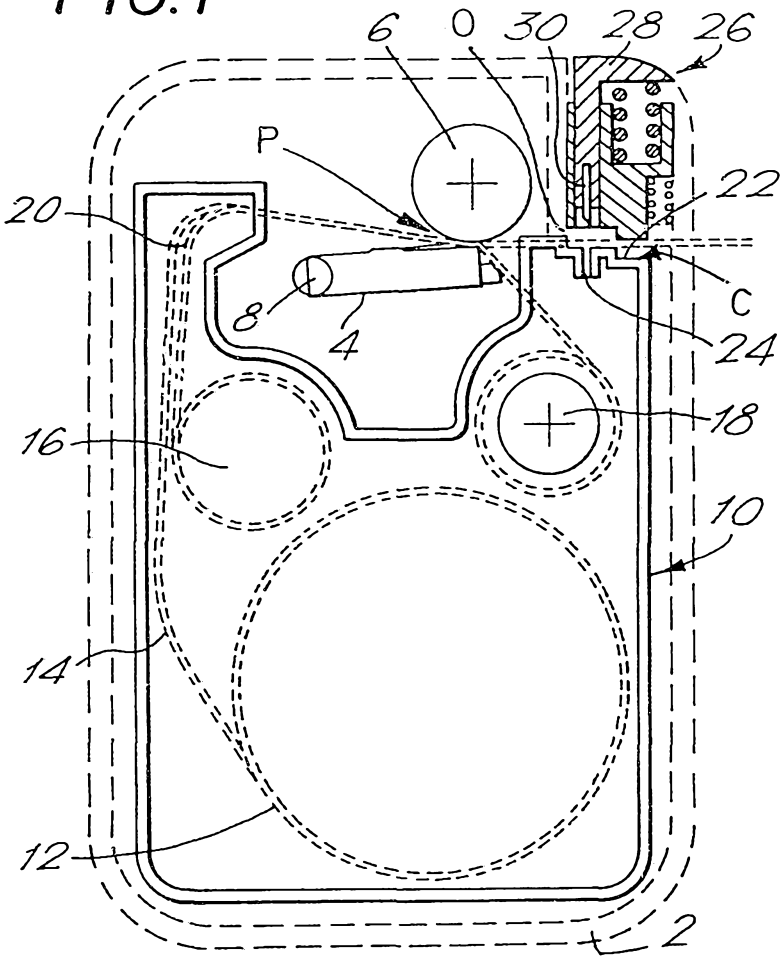

FIG. 2

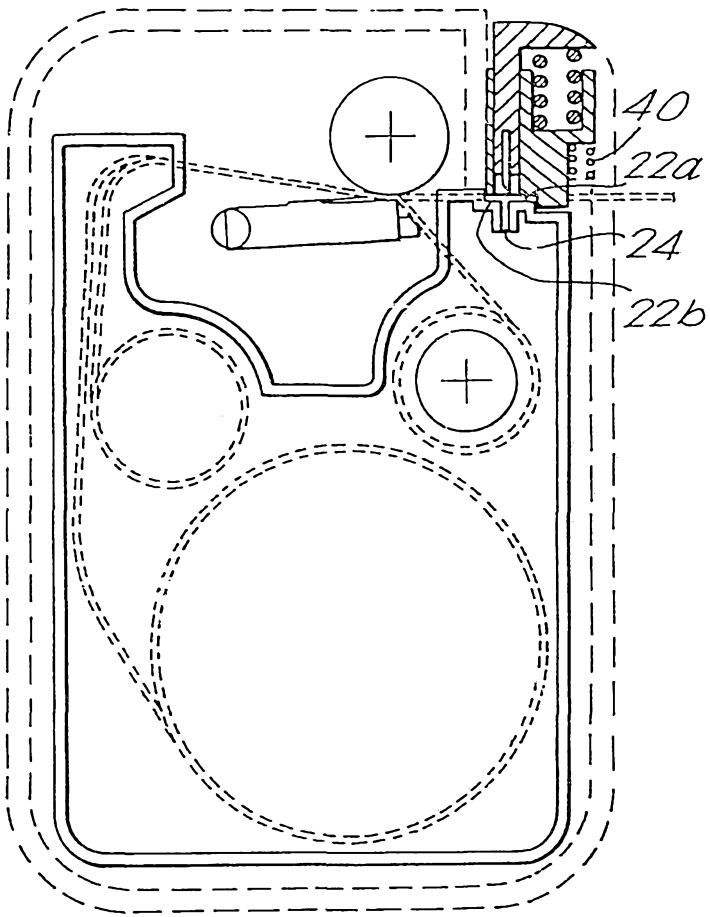

67332/94

FIG. 3.

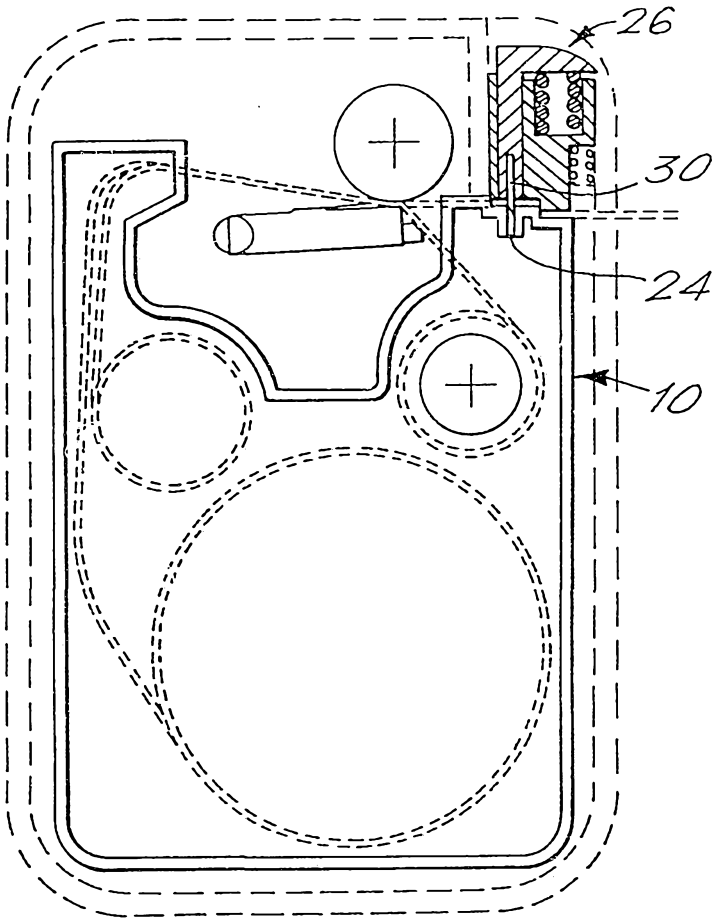

FIG. 4.

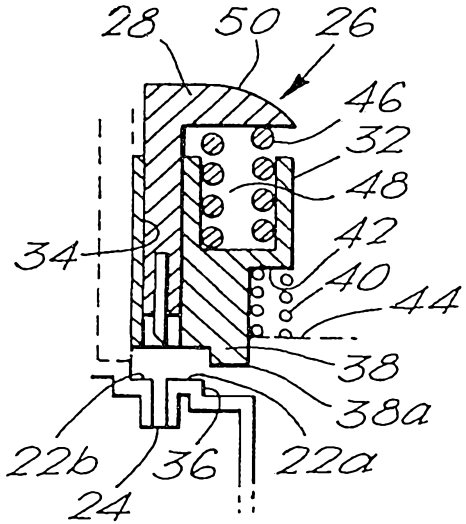

FIG. 4a.

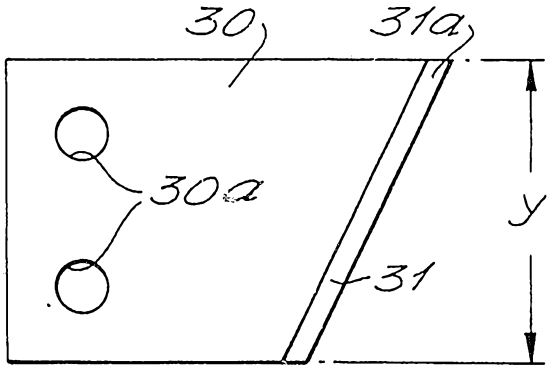

FIG. 4b.

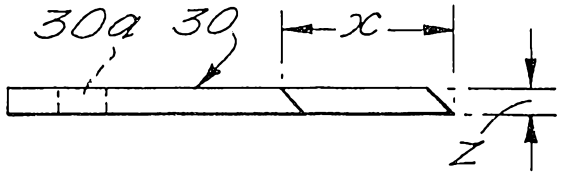

FIG. 5.

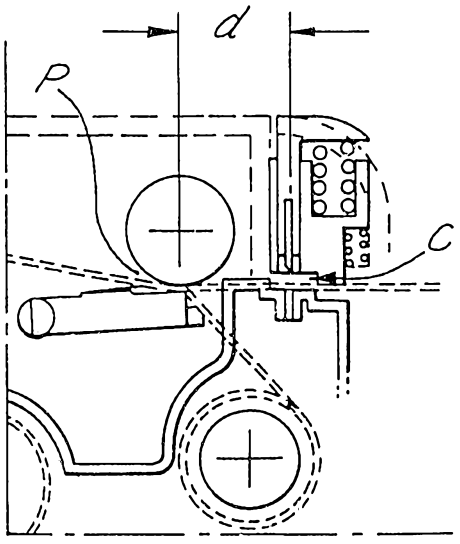

FIG. 6.

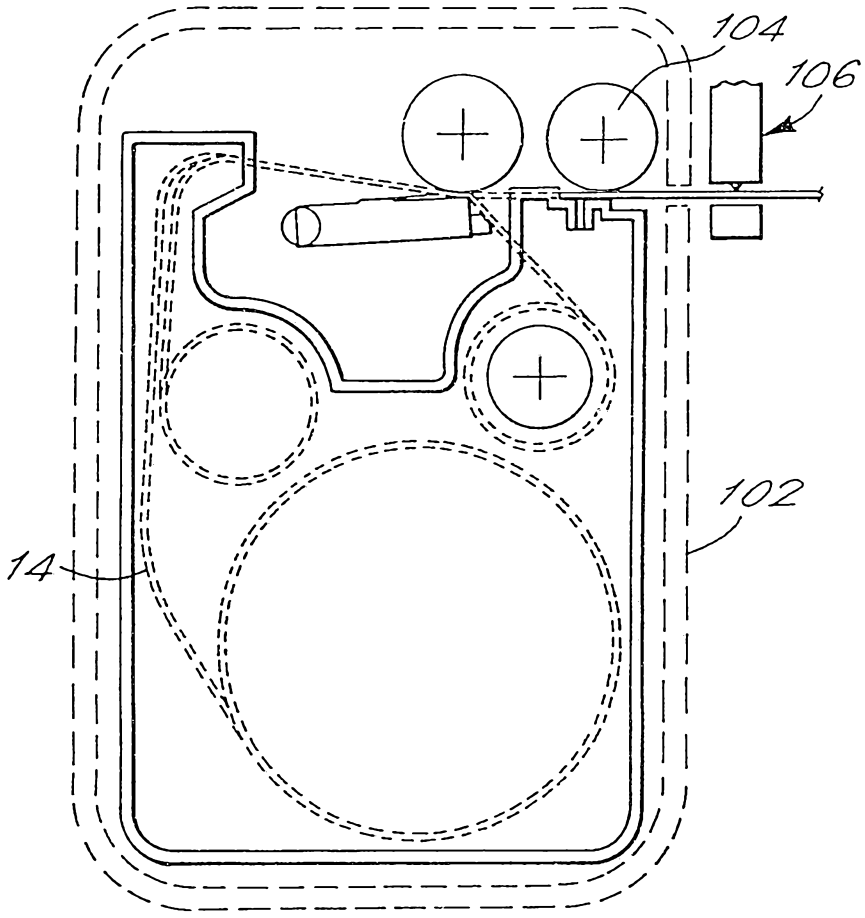

FIG. 7.

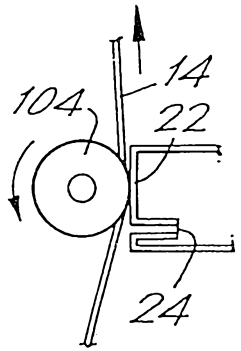

FIG. 8.

