July 5, 1932. O. HOLDEN 1,866,350

STOP LOG FITTING

Filed Nov. 9, 1931

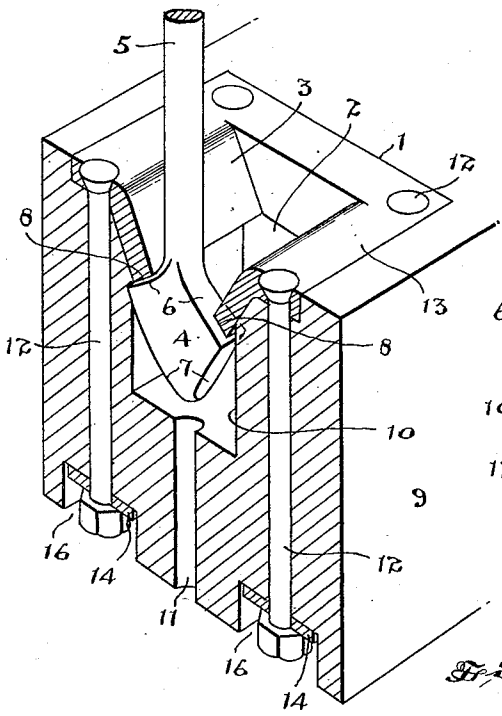

Fig. 1.

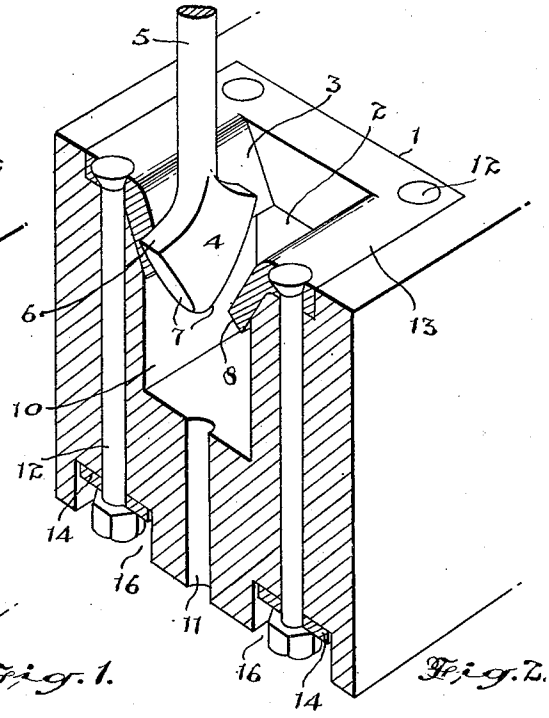

Fig. 2.

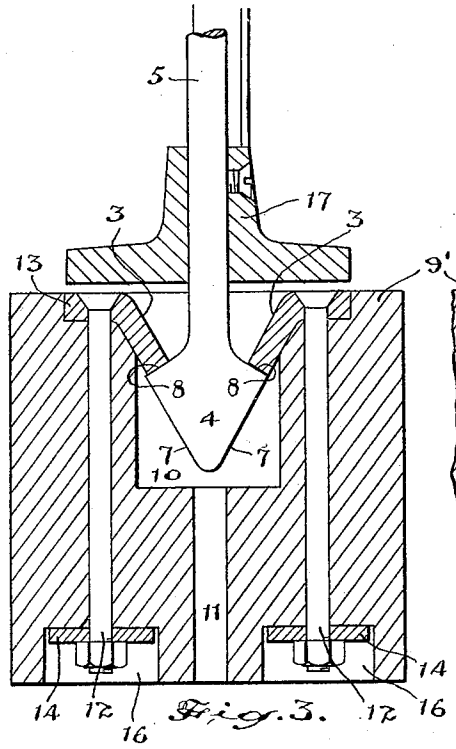

Fig. 3.

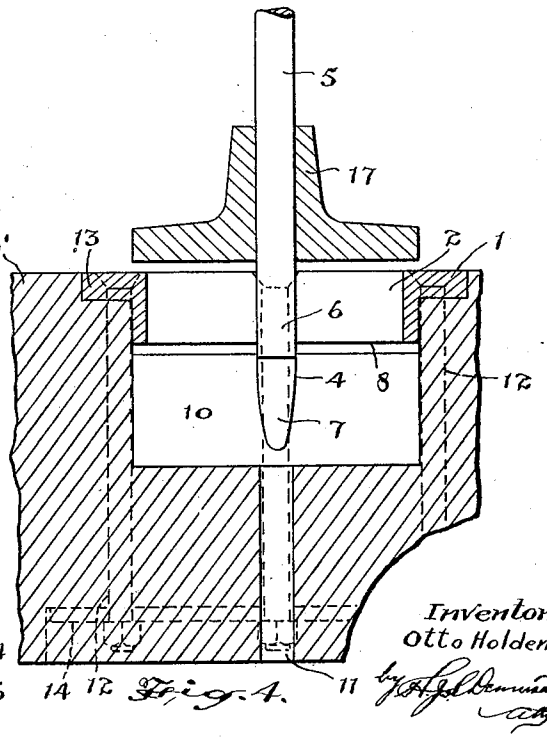

Fig. 4.

Inventor:
Otto Holden.
by

Patented July 5, 1932 1,866,350

UNITED STATES PATENT OFFICE

OTTO HOLDEN, OF TORONTO, ONTARIO, CANADA, ASSIGNOR TO WILLIAM KENNEDY & SONS, LIMITED, OF OWEN SOUND, ONTARIO, CANADA

STOP LOG FITTING

Application filed November 9, 1931, Serial No. 573,899, and in Canada November 12, 1930.

The principal objects of the invention are, to provide a stop log fitting which may be very easily applied, does not require the careful arrangement of registering fittings and effects a material reduction in cost of stop logs.

A further and important object is to provide a fitting which will obviate the bending or distortion of the ram for raising and lowering the logs.

The principal feature of the invention consists in the novel formation of a socket plate to be secured in an opening in the stop log, provided with bevelled sides leading to a central pocket, the bevelled sides presenting projecting edges, whereby the ram head is guided into the recess and is adapted to engage the edges of the bevelled sides to effect the lifting of the log.

In the drawing, Figure 1 is a perspective sectional view of a portion of a stop log taken transversely of the improved construction and showing the head of the ram interlocked with the plate.

Figure 2 is a view similar to Figure 1 showing the head of the ram in the position of being removed from engagement with the log.

Figure 3 is a transverse sectional view through the stop log and fitting showing the ram in the locked position.

Figure 4 is a longitudinal sectional view through the centre of the stop log and fitting in the position shown in Figure 3.

It has been customary in stop log construction to provide fittings for the top of the log provided with hopper-shaped sides and to guide the head of the ram to an opening passing through the log, a bottom fitting being arranged in alignment with the opening. The cutting of the opening completely through the log sufficiently large to allow the head of the ram to pass therethrough and the socketing of the two fittings, cut away a very considerable quantity of the cross sectional shape of the log and this necessitated the use of larger logs than would otherwise be necessary.

The present invention aims to minimize the cutting away of the longitudinal fibres of the log so that it will not be unduly weakened and logs of a smaller cross sectional area and consequently lesser weight may be used for certain specific uses.

The invention is extremely simple and consists of a plate 1, preferably formed of cast metal which has an opening 2 therethrough, preferably of greater length than width and the inner side walls 3 of the opening 2 are bevelled inwardly, providing a hopper-shaped opening of sufficient length to receive the broad arrow head 4 of the ram 5.

The head is provided with bevelled surfaces 6 which slope outwardly to meet the converging sides 7 and the inward longitudinal edges 8 of the side walls 3 of the plate 1 are adapted to be engaged by the bevelled surfaces 6 when the ram head is turned crosswise of the plate.

The plate is countersunk into the stop log 9 and a recess 10 is cut in the log below the inturned side walls 3 to permit of the easy manipulation of the ram head, but the entire depth of the countersunk and recess need not be more than about half the depth of the log.

A drain hole 11 is preferably cut through the log from the bottom of the recess 10 to permit the water, sand and particles of rock or dirt to escape.

The plate is preferably secured in position by a plurality of bolts 12 which extend downwardly through the flange 13 of the plate 1 and are fastened at the opposite end by plates 14 arranged in shallow recesses 16.

The shaft of the ram 5 has mounted thereon a flanged collar 17 which is adapted to engage the top of the plate 1 when the ram head has been inserted in the slot in the plate in order to force the log downwardly against the pressure of water flowing over the dam.

The use of arrow head rams for handling stop logs is not new, but it is new to provide means for engagement with the arrow head rams which will not require the ram to be passed completely through the stop log. This is accomplished by means of the peculiar construction of the plate 1 with its inturned bevelled side walls which provide both a guide for the insertion of the ram head and the lifting means for engaging the upper sides

of the ram head when it is turned across the slot.

This arrangement obviates cutting through the longitudinal fibres of the log to its full depth and by thus conserving the longitudinal strength of the log, a log of much lighter weight may be used or where conservation of weight is not material the log itself will be stronger to resist the load placed upon it.

It will be readily understood from the foregoing description that the cutting of the countersink to receive the plate and the recess may be done from the one side of the log and it will obviate the necessity of matching countersinks to register on the other side, as is required where dual plates are used.

The cost of construction of the stop log is therefore reduced to the minimum by the use of the present invention.

What I claim as my invention is:—

1. A stop log having a recess in one side thereof, a plate extending over said recess and having a slot therein, and a ram having a head adapted to enter the slot in said plate and when turned to engage the inner edges of the slotted plate to lift the log, and means carried by said ram in spaced relation to the head thereof for engaging the upper surface of said plate, irrespective of the position to which said head has been turned to force said stop log into position.

2. A stop log having a recess in one side thereof, a plate recessed into said stop log at the outer side of said recess, said plate having spaced flanges extending downwardly into said recess, the lower edges of said flanges forming shoulders intermediate of the depth of said recess, and a ram head adapted to extend between said spaced flanges and having shoulders to engage the said shoulders, said flanges effecting a reinforcement of said plate upon the head being turned.

3. A stop log having a recess in one side thereof, a plate countersunk into said log and having a pair of longitudinally arranged inwardly sloping side walls extending into said recess and having their inner edges projecting beyond the inner walls of the recess, means for securing the plate rigidly to the log, and a ram head of arrow shape having bevelled surfaces adapted to engage the inward under edges of the sides of said plate to effect the lifting of the stop log, said head being flattened and of a width to freely enter between said edges when turned to a right angular position.

4. A stop log fitting, comprising a plate having a central longitudinal opening, the longitudinal sides of which are bevelled downwardly and terminate in squared edges, a plurality of bolts extending through the flange of said plate and adapted to be secured in the stop log, and a ram having bevelled surfaces adapted to engage the flanged edges of said plate, and a flange secured to said ram adapted to engage the top of the plate.

5. A stop log having recesses cut in the top side adjacent to the ends, rectangular plates countersunk into the log and extending over said recesses and having inwardly converging longitudinally extending flange portions projecting into said recesess and beyond the side walls thereof, bolts extending through the flanged plates and secured at the underside of the log, arrow headed rams adapted to enter the hopper-shaped recesses in said plates, and flanges rigidly secured to said rams adapted to engage said plates to limit the entering movement of the ram and to bear on said plates to force the stop log into place.

6. A stop log, comprising a length of timber having a recess cut therein at each end extending downwardly from the top for a portion of the depth of the timber, plates having flanges recessed into the top surface of said timber around said recesses and having portions overhanging said recesses, to be engaged and disengaged by ram members, said timber having passages therethrough leading downwardly from the bottom of said recesses to permit drainage of water therefrom and provide for egress of sand and rock particles from said recesses.

OTTO HOLDEN.