US 20030140114A1

(19) United States

(12) Patent Application Publication (10) Pub. No.: US 2003/0140114 A1

Katz et al. (43) Pub. Date: Jul. 24, 2003

(54) DIGITAL INFORMATION LIBRARY AND DELIVERY SYSTEM

(76) Inventors: **Donald R. Katz**, Montclair, NJ (US); **Edwin J. Lau**, San Jose, CA (US); **Timothy Mott**, Ketchum, ID (US); **Scott A. Brenneman**, Menlo Park, CA (US); **Benjamin Che-Ming Jun**, Palo Alto, CA (US); **Samuel Hong-Yen Pai**, Menlo Park, CA (US)

Correspondence Address:
Sheryl Sue Holloway
BLAKELY, SOKOLOFF, TAYLOR & ZAFMAN LLP
Seventh Floor
12400 Wilshire Boulevard
Los Angeles, CA 90025-1026 (US)

(21) Appl. No.: **10/331,619**

(22) Filed: **Dec. 31, 2002**

Related U.S. Application Data

(60) Division of application No. 09/234,044, filed on Jan. 19, 1999, now Pat. No. 6,560,651, which is a continuation of application No. 08/710,114, filed on Sep. 12, 1996, now Pat. No. 5,926,624.

Publication Classification

(51) **Int. Cl.**[7] **G06F 15/16**

(52) **U.S. Cl.** **709/217**

(57) **ABSTRACT**

A computer network based digital information library system employing authentication and encryption protocols for the secure transfer of digital information library programs to a client computer system and a mobile digital information playback device removably connectable to the client computer system. The present invention is a computer network based library and information delivery system for accessing and obtaining selected digital information files. The library and information delivery system comprises: 1) a library server having a plurality of digital information files; 2) a client computer system coupled to the library server over a network; and 3) a mobile device removably connectable to the client computer system, the client computer system including logic for requesting a download of a selected one or more of the digital information files from the library server, the client computer system further including logic for downloading the selected one or more of the digital information files to the mobile device.

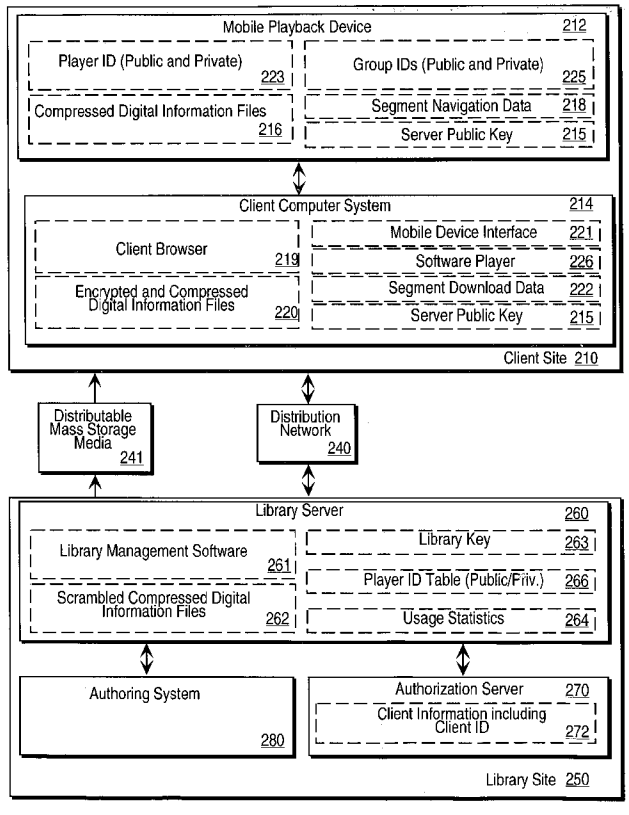

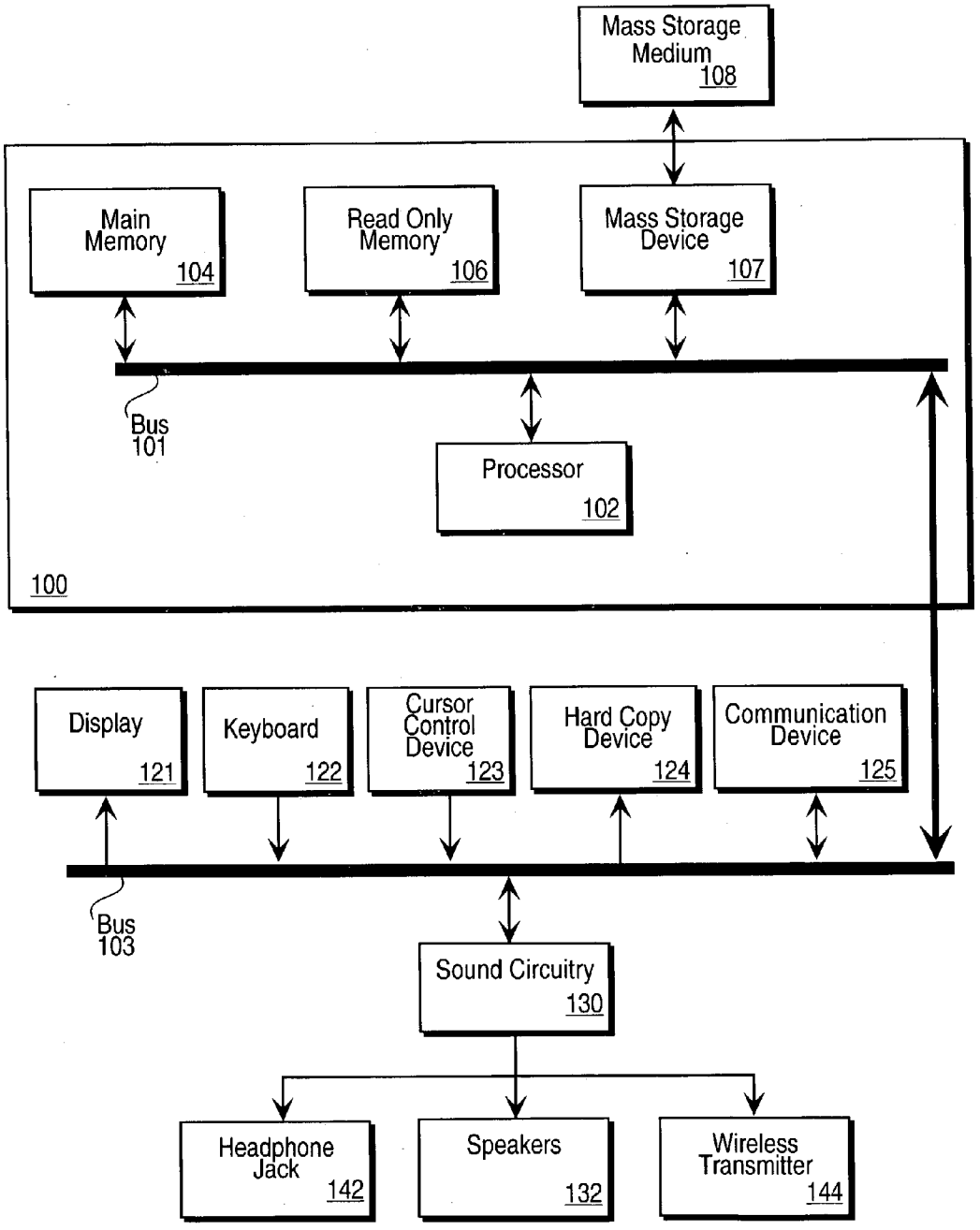
Mass Storage Medium 108
Main Memory 104
Read Only Memory 106
Mass Storage Device 107
Bus 101
Processor 102
100
Display 121
Keyboard 122
Cursor Control Device 123
Hard Copy Device 124
Communication Device 125
Bus 103
Sound Circuitry 130
Headphone Jack 142
Speakers 132
Wireless Transmitter 144

FIG. 1

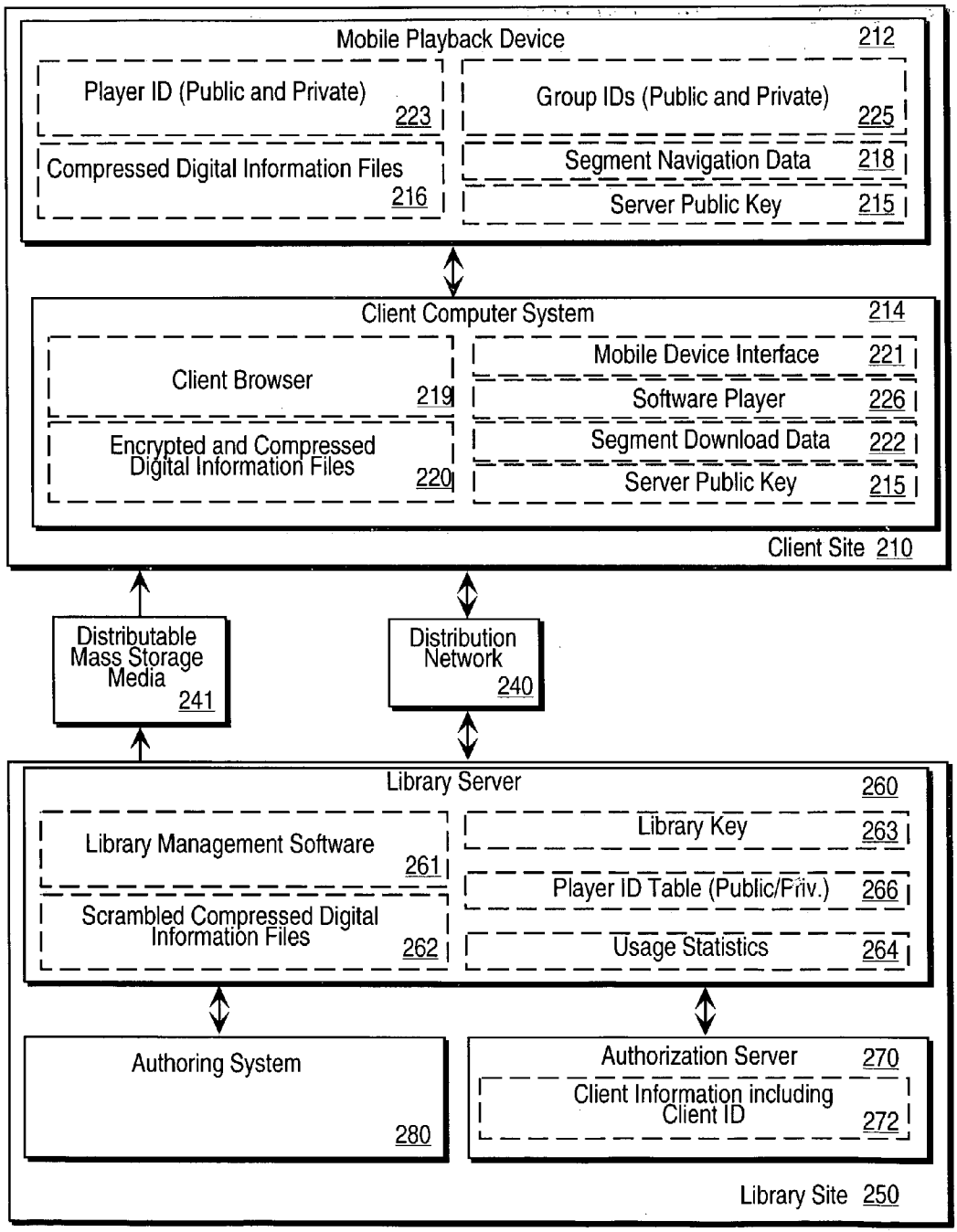
Mobile Playback Device 212
Player ID (Public and Private) 223
Group IDs (Public and Private) 225
Compressed Digital Information Files 216
Segment Navigation Data 218
Server Public Key 215
Client Computer System 214
Client Browser 219
Mobile Device Interface 221
Software Player 226
Encrypted and Compressed Digital Information Files 220
Segment Download Data 222
Server Public Key 215
Client Site 210
Distributable Mass Storage Media 241
Distribution Network 240
Library Server 260
Library Management Software 261
Library Key 263
Player ID Table (Public/Priv.) 266
Scrambled Compressed Digital Information Files 262
Usage Statistics 264
Authoring System 280
Authorization Server 270
Client Information including Client ID 272
Library Site 250

FIG. 2

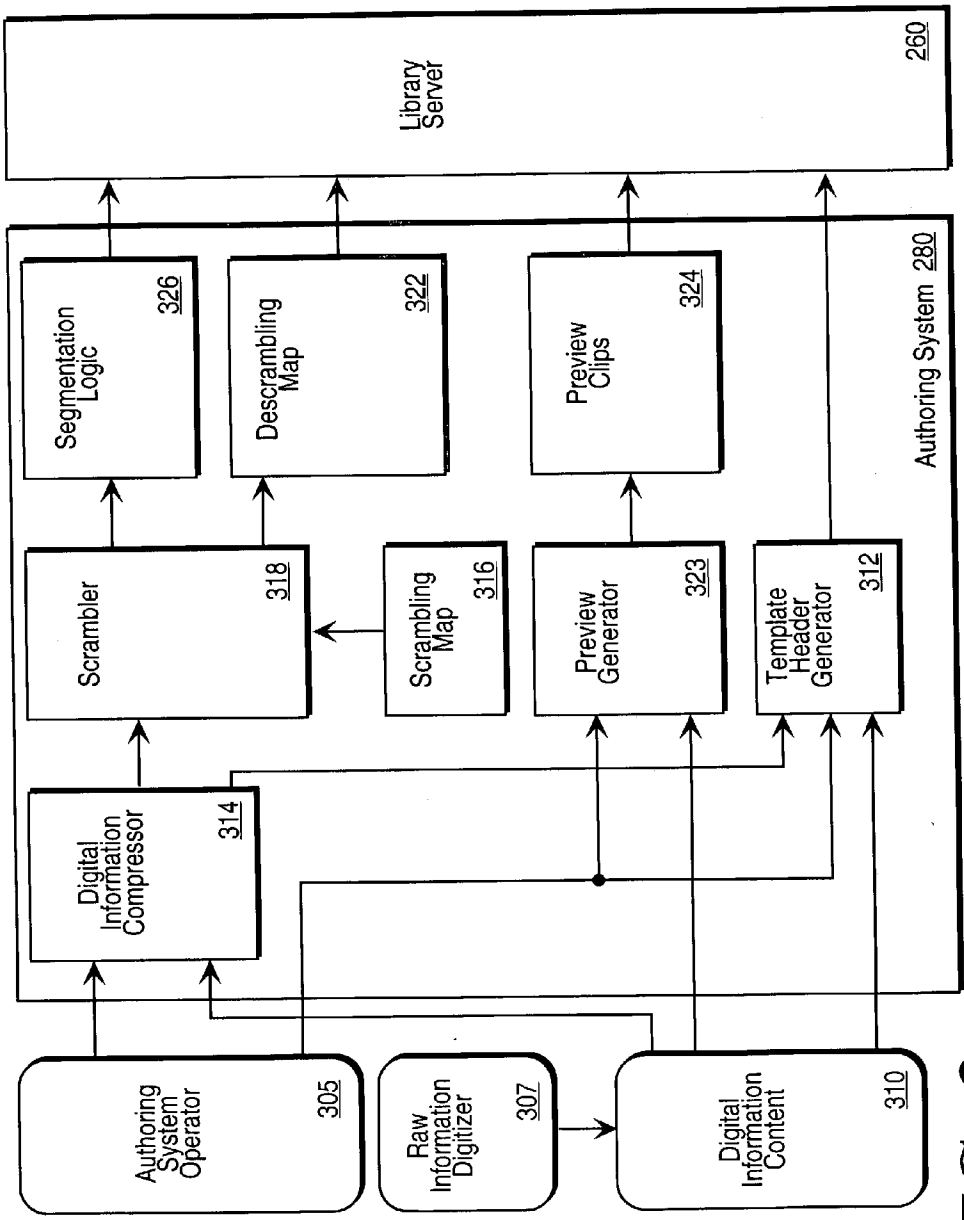
Library Server
260
Authoring System 280
Segmentation Logic
326
Descrambling Map
322
Preview Clips
324
Scrambler
318
Scrambling Map
316
Preview Generator
323
Template Header Generator
312
Digital Information Compressor
314
Authoring System Operator
305
Raw Information Digitizer
307
Digital Information Content
310

FIG. 3

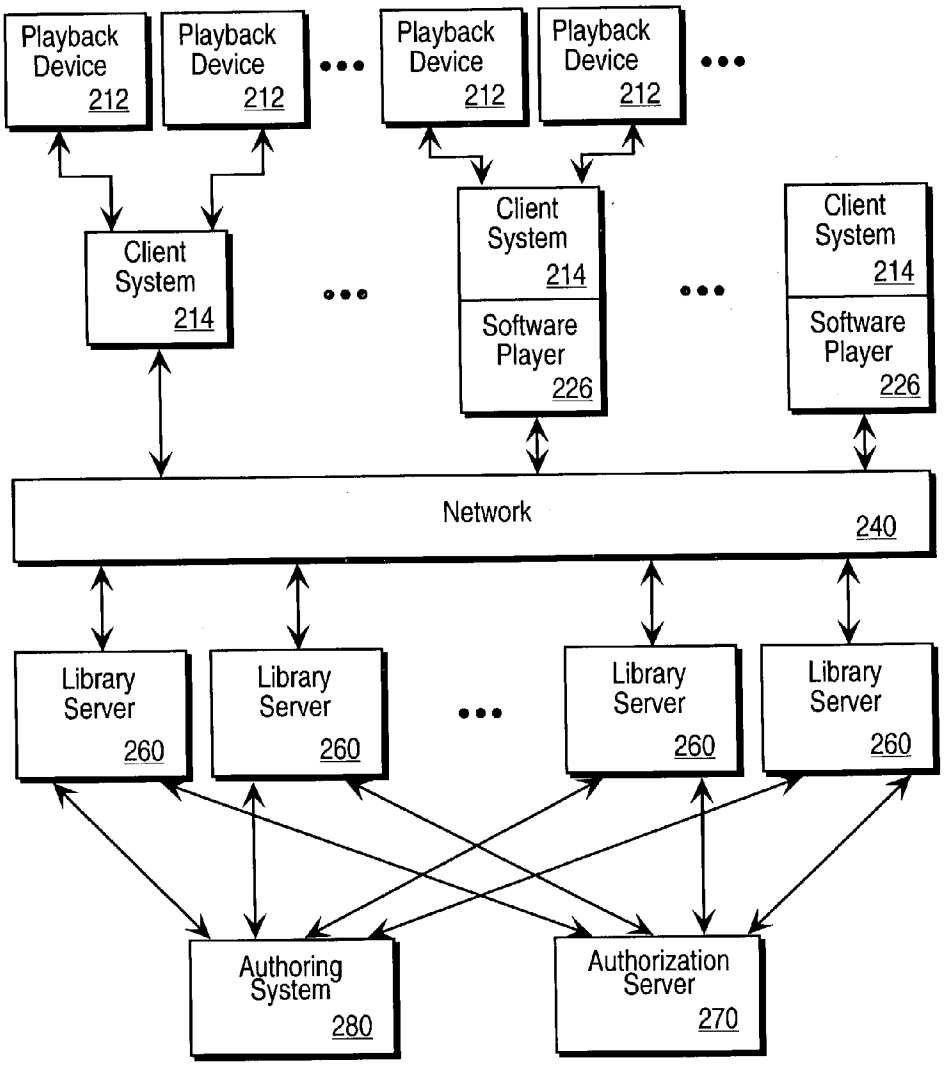
Playback Device 212
Playback Device 212
Playback Device 212
Playback Device 212
Client System 214
Client System 214
Software Player 226
Client System 214
Software Player 226
Network 240
Library Server 260
Library Server 260
Library Server 260
Library Server 260
Authoring System 280
Authorization Server 270

FIG. 4

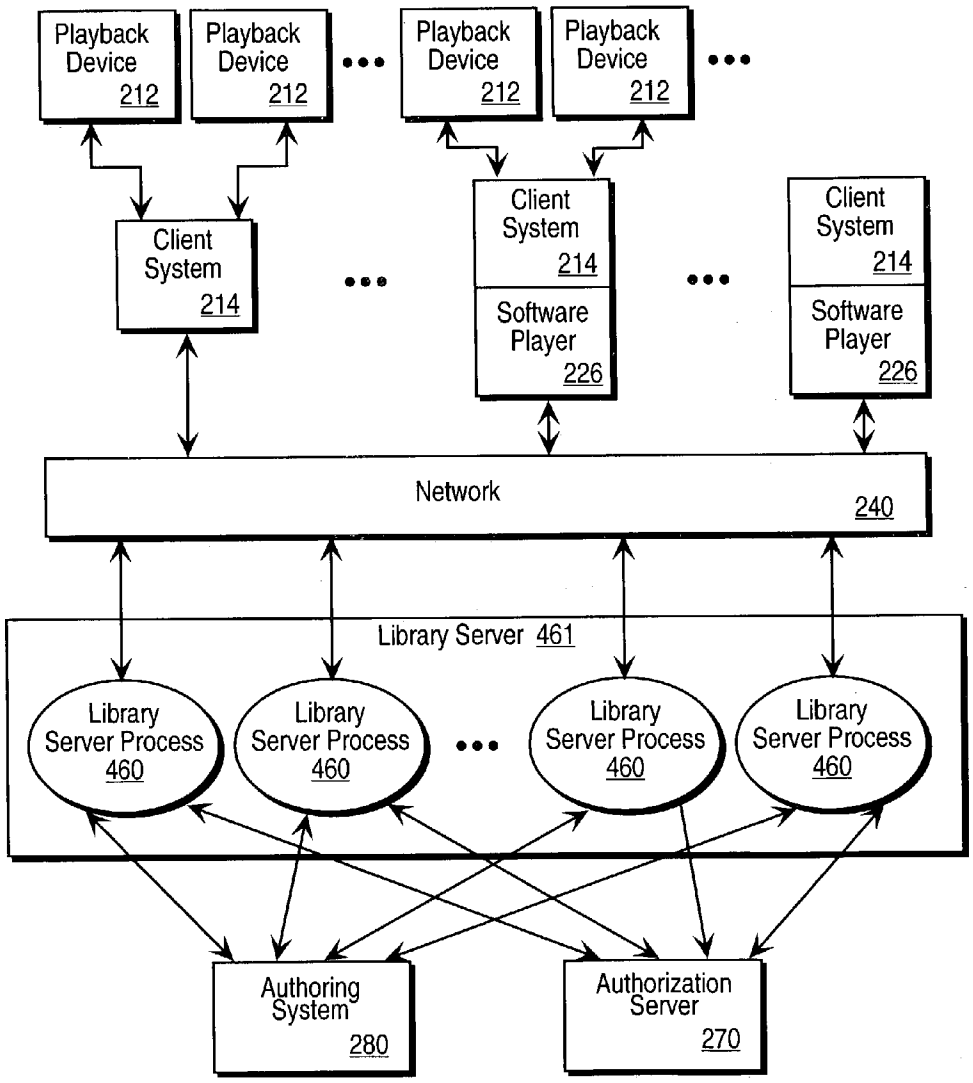
Playback Device 212
Playback Device 212
Playback Device 212
Playback Device 212
Client System 214
Client System 214
Software Player 226
Client System 214
Software Player 226
Network 240
Library Server 461
Library Server Process 460
Library Server Process 460
Library Server Process 460
Library Server Process 460
Authoring System 280
Authorization Server 270

FIG. 5

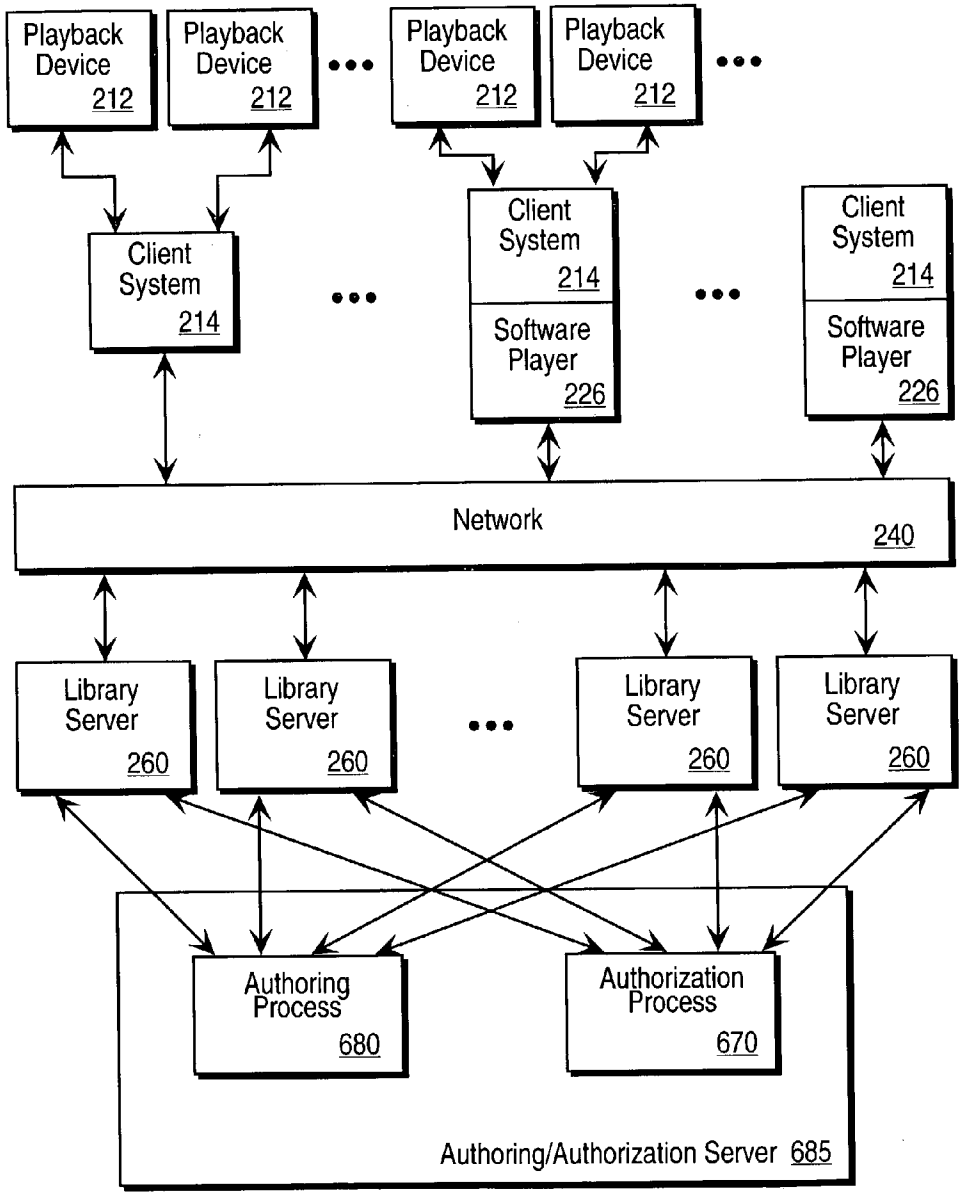
Playback Device 212
Playback Device 212
Playback Device 212
Playback Device 212
Client System 214
Client System 214
Software Player 226
Client System 214
Software Player 226
Network 240
Library Server 260
Library Server 260
Library Server 260
Library Server 260
Authoring Process 680
Authorization Process 670
Authoring/Authorization Server 685

FIG. 6

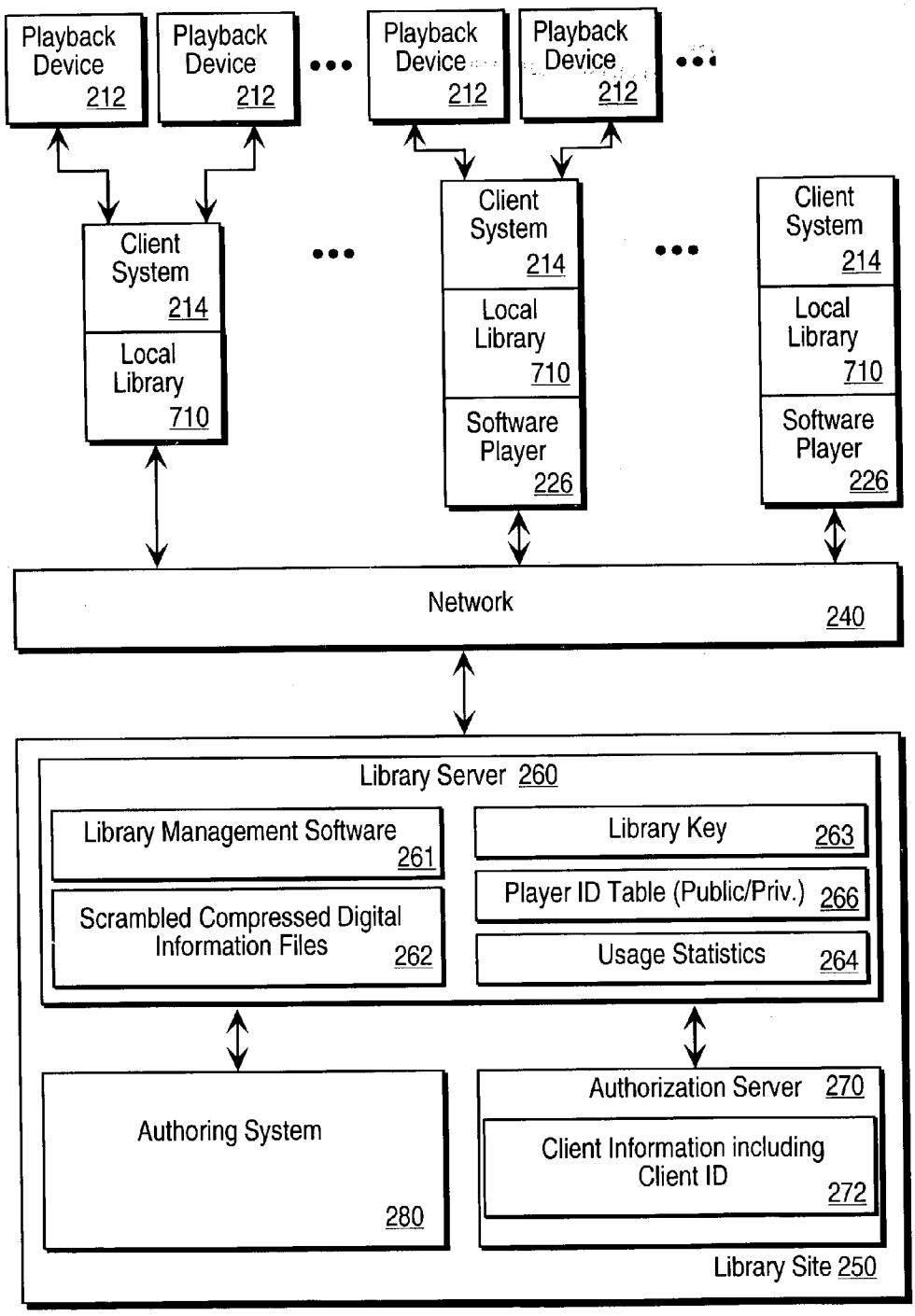
Playback Device 212
Playback Device 212
Playback Device 212
Playback Device 212
Client System 214
Local Library 710
Client System 214
Local Library 710
Software Player 226
Client System 214
Local Library 710
Software Player 226
Network 240
Library Server 260
Library Management Software 261
Scrambled Compressed Digital Information Files 262
Library Key 263
Player ID Table (Public/Priv.) 266
Usage Statistics 264
Authoring System 280
Authorization Server 270
Client Information including Client ID 272
Library Site 250

FIG. 7

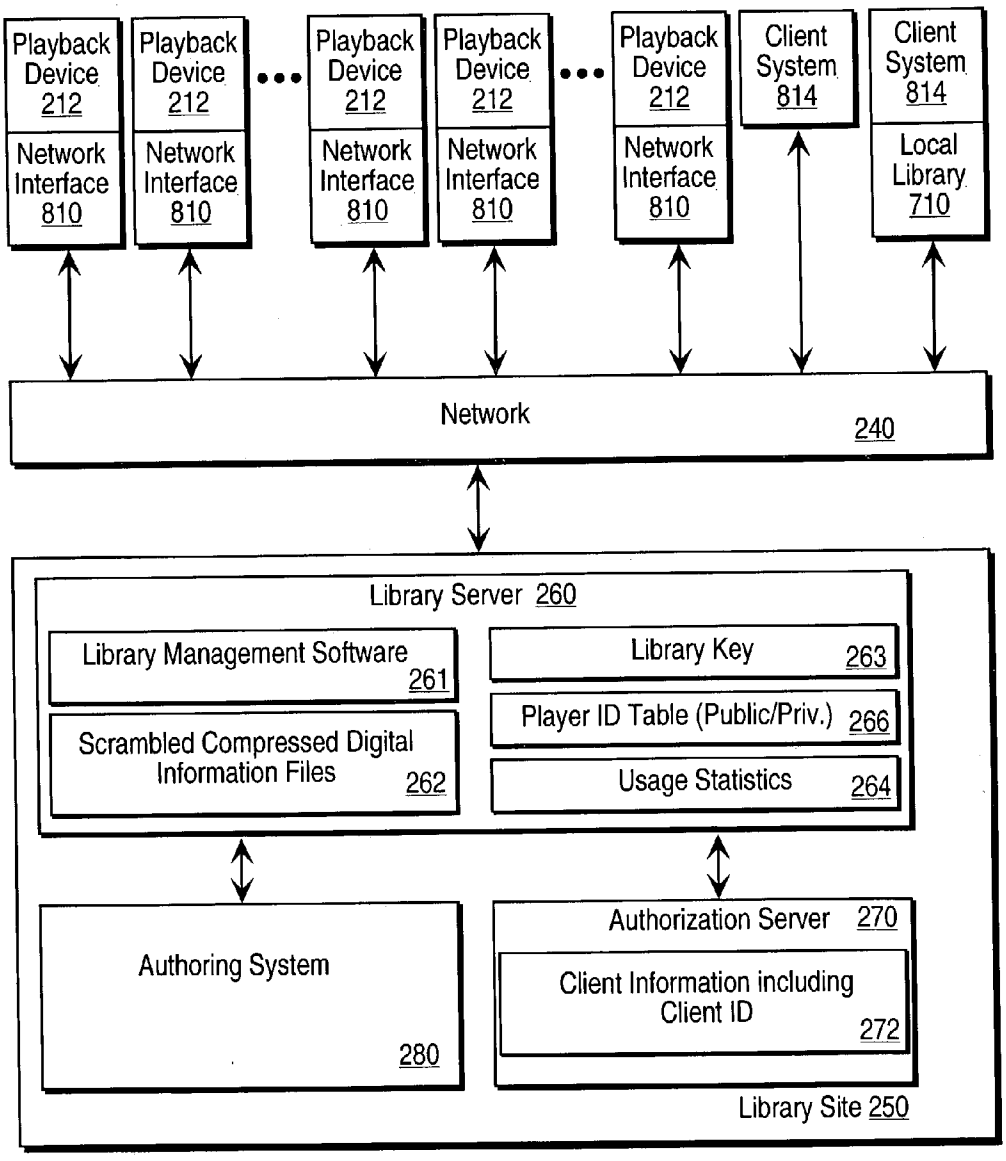
Playback Device 212
Network Interface 810
Playback Device 212
Network Interface 810
Playback Device 212
Network Interface 810
Playback Device 212
Network Interface 810
Playback Device 212
Network Interface 810
Client System 814
Client System 814
Local Library 710
Network 240
Library Server 260
Library Management Software 261
Scrambled Compressed Digital Information Files 262
Library Key 263
Player ID Table (Public/Priv.) 266
Usage Statistics 264
Authoring System 280
Authorization Server 270
Client Information including Client ID 272
Library Site 250

FIG. 8

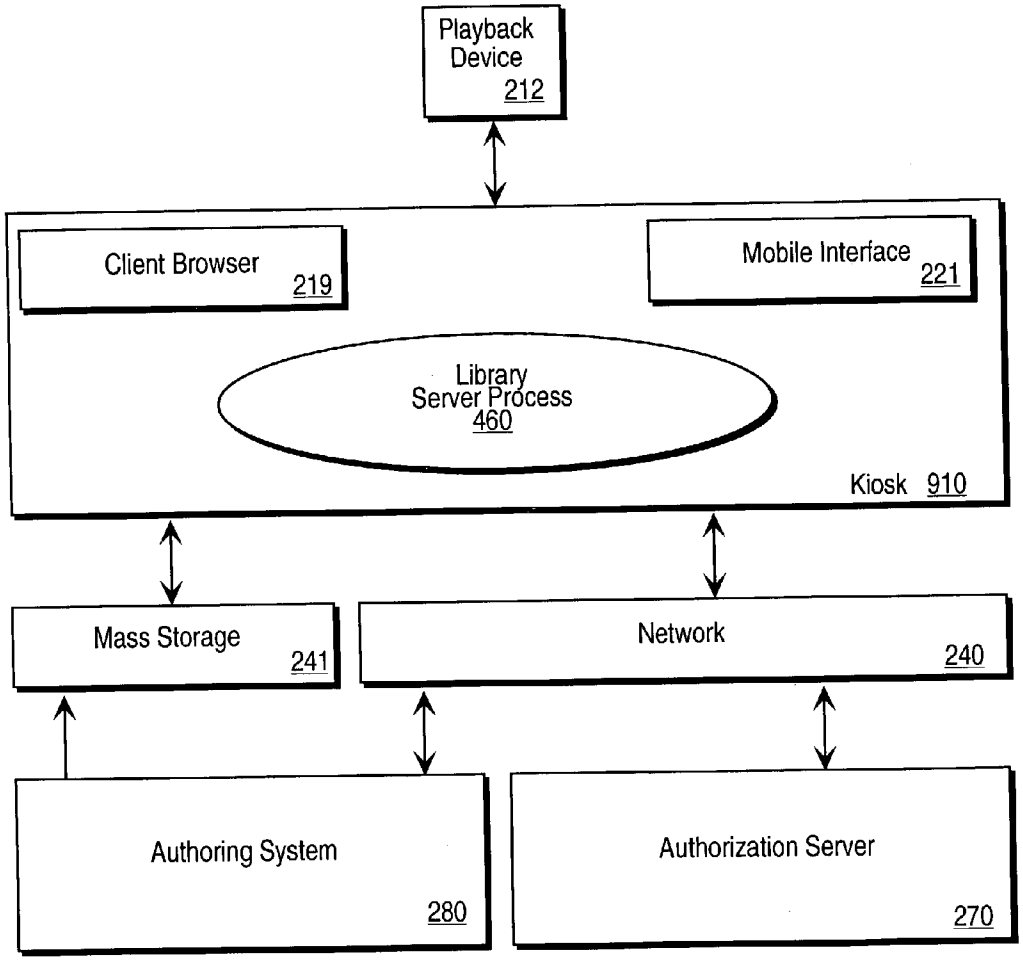
Playback Device 212
Client Browser 219
Mobile Interface 221
Library Server Process 460
Kiosk 910
Mass Storage 241
Network 240
Authoring System 280
Authorization Server 270

FIG. 9

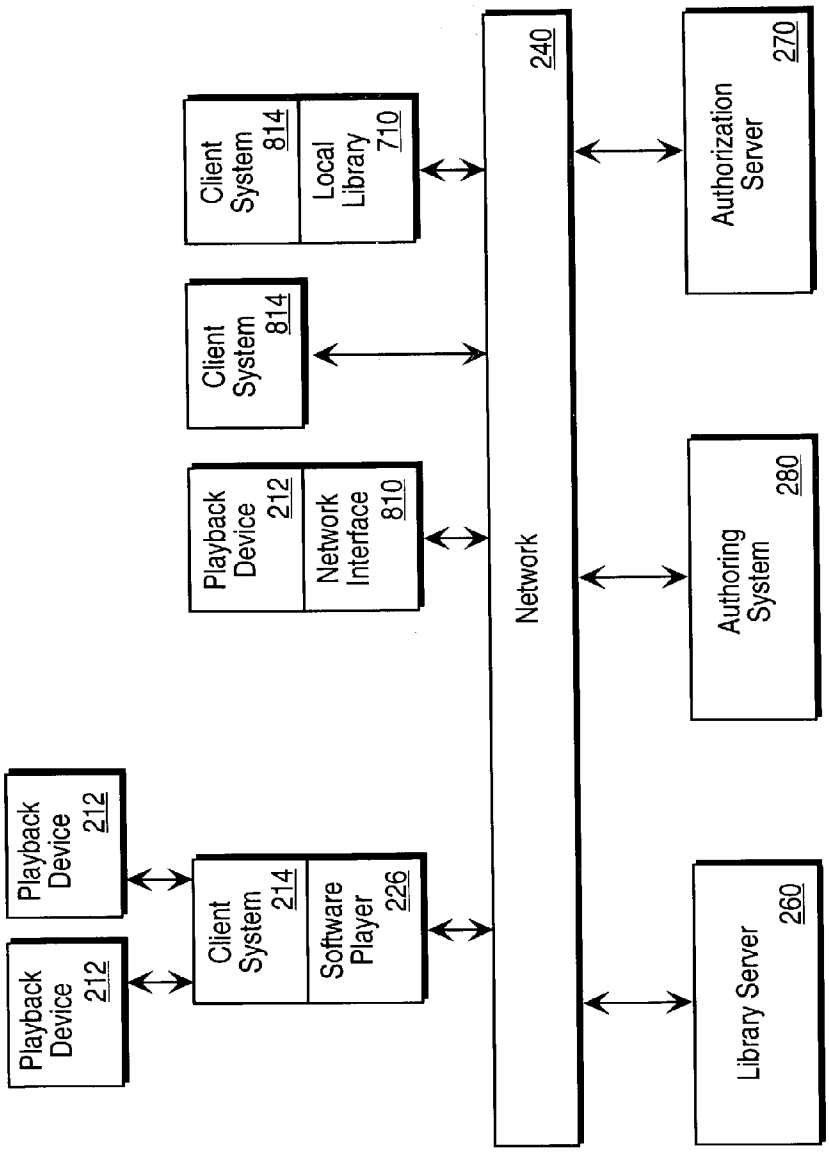
Playback Device 212
Playback Device 212
Client System 214
Software Player 226
Playback Device 212
Network Interface 810
Client System 814
Client System 814
Local Library 710
240
Network
Library Server 260
Authoring System 280
Authorization Server 270

FIG. 10

DIGITAL INFORMATION LIBRARY AND DELIVERY SYSTEM

FIELD OF THE INVENTION

[0001] The present invention relates generally to a digital information transmission, receiving, and playback system. Specifically, the present invention pertains to a computer network based digital information library providing interactive client computer access.

DESCRIPTION OF RELATED ART

[0002] Recent technological advances in the compression of digital data and the expansion of storage capacities of computer systems together with the increased bandwidth of computer network infrastructures have created new possibilities for personalized access to and usage of large amounts of digital information. One form of this type of digital information is audio information delivered across a computer network as digitized information.

[0003] In the field of interactive digital information transmission, receiving, and playback systems, several patents are known to the present applicants. U.S. Pat. No. 5,132,992, issued Jul. 21, 1992 to Yurt et al. (Yurt), describes a system of distributing video and/or audio information employing digital signal processing to achieve high rates of data compression. The Yurt patent describes a transmission system including a conversion means for placing the items from a source material library into a predetermined format as formatted data. Audio data is compressed by an audio compressor by application of an adaptive differential pulse code modulation (ADPCM) process to the audio data. Stored items are accessed in the compressed data library through the use of a unique address code assigned to each item during storage encoding. The unique address code is used for requesting and accessing information and items throughout the Yurt transmission and receiving process. The Yurt transmission system includes means by which a user enters a customer identifier (ID) code by which the system accesses the users account, and indicates to the system that the user is a subscriber of the system. If a subscriber is in good standing, the Yurt system delivers selected titles using the described techniques.

[0004] One significant problem with the audio transmission and receiving system described in Yurt is the lack of an effective means for ensuring the security of the digital information library and of the items downloaded to a user from the digital information library. Although Yurt describes the use of a unique identification code assigned to items in the library and a customer ID code assigned to particular users, no authentication protocols or encryption techniques are described to prevent the unauthorized creation of clone libraries or the unauthorized download or copying of library items. Secondly, Yurt and related prior art does not describe an authentication or encryption means providing secure transactions between a server based digital information library supporting a client computer system having an interface to a mobile playback device. Thirdly, the prior art does not describe a mechanism for selecting a digital information passage to be previewed. Prior art systems also do not describe a system whereby only part of a program gets downloaded from a client computer system to a mobile playback device depending on how much storage space is available in the mobile playback device. Prior art systems also do not describe a mechanism for specifying multiple programs to be downloaded from a digital information library into a mobile playback device. Prior art systems also do not detail the processes required in the authoring system to generate content for the digital information library. Finally, prior art systems do not describe an accounting system whereby library content providers can perform real-time queries on usage information related to the access of library items.

SUMMARY OF THE INVENTION

[0005] The preferred embodiment of the present invention is a computer network based digital information library system employing authentication, targeting, and encryption protocols for the secure transfer of digital information library programs to a client computer system and a mobile digital information playback device removably connectable to the client computer system. The present invention is a computer network based library and information delivery system for accessing and obtaining selected digital information files. The library and information delivery system comprises: 1) a library server having a plurality of digital information files; 2) a client computer system coupled to the library server over a network; and 3) a mobile device removably connectable to the client computer system, the client computer system including logic for requesting a download of a selected one or more of the digital information files from the library server, the client computer system further including logic for downloading the selected one or more of the digital information files to the mobile device.

BRIEF DESCRIPTION OF THE DRAWINGS

[0006] The accompanying drawings, which are included as part of the present specification, illustrate the presently preferred embodiment of the present invention and together with the general description given above and the detailed description of the preferred embodiment given below serve to explain and teach the principles of the present invention.

[0007] **FIG. 1** illustrates a typical computer platform on which the present invention may be implemented.

[0008] **FIG. 2** illustrates a high level block diagram of the computer network based digital information library system of the present invention.

[0009] **FIG. 3** illustrates a high level block diagram of the authoring system of the present invention.

[0010] **FIG. 4** illustrates an alternative embodiment having a plurality of library servers.

[0011] **FIG. 5** illustrates an alternative embodiment having a plurality of library server processes.

[0012] **FIG. 6** illustrates an alternative embodiment having a single authoring/authorization server.

[0013] **FIG. 7** illustrates an alternative embodiment wherein client computer systems have a local library.

[0014] **FIG. 8** illustrates an alternative embodiment wherein mobile playback devices have a direct network interface in lieu of a client computer system.

[0015] **FIG. 9** illustrates an alternative embodiment wherein a kiosk is used to retain and distribute selected programming.

[0016] **FIG. 10** illustrates an alternative embodiment wherein all system components are connected through a common network.

DETAILED DESCRIPTION OF THE PREFERRED EMBODIMENT

[0017] The preferred embodiment of the present invention is a computer network based digital information library system employing authentication, targeting, and encryption protocols for the secure transfer of digital information library programs to a client computer system and a mobile digital information playback device removably connectable to the client computer system. In the following detailed description, numerous specific details are set forth in order to provide a thorough understanding of the present invention. However, it will be apparent to one of ordinary skill in the art that these specific details need not be used to practice the present invention. In other instances, well known structures, interfaces, and processes have not been shown in detail in order not to unnecessarily obscure the present invention.

[0018] **FIG. 1** illustrates a typical data processing system upon which one embodiment of the present invention is implemented. It will be apparent to those of ordinary skill in the art, however that other alternative systems of various system architectures may also be used. The data processing system illustrated in **FIG. 1** includes a bus or other internal communication means **101** for communicating information, and a processor **102** coupled to the bus **101** for processing information. The system further comprises a random access memory (RAM) or other volatile storage device **104** (referred to as main memory), coupled to bus **101** for storing information and instructions to be executed by processor **102**. Main memory **104** also may be used for storing temporary variables or other intermediate information during execution of instructions by processor **102**. The system also comprises a read only memory (ROM) and/or static storage device **106** coupled to bus **101** for storing static information and instructions for processor **102**, and a mass storage device **107** such as a magnetic disk drive or optical disk drive. Mass storage device **107** is coupled to bus **101** and is typically used with a computer readable mass storage medium **108**, such as a magnetic or optical disk, for storage of information and instructions. The system may further be coupled to a display device **121**, such as a cathode ray tube (CRT) or a liquid crystal display (LCD) coupled to bus **101** through bus **103** for displaying information to a computer user. An alphanumeric input device **122**, including alphanumeric and other keys, may also be coupled to bus **101** through bus **103** for communicating information and command selections to processor **102**. An additional user input device is cursor control **123**, such as a mouse, a trackball, stylus, or cursor direction keys coupled to bus **101** through bus **103** for communicating direction information and command selections to processor **102**, and for controlling cursor movement on display device **121**. Another device which may optionally be coupled to bus **101** through bus **103** is a hard copy device **124** which may be used for printing instructions, data, or other information on a medium such as paper, film, or similar types of media. In the preferred embodiment, a communication device **125** is coupled to bus **101** through bus **103** for use in accessing other nodes of a network computer system or other computer peripherals. This communication device **125** may include any of a number of commercially available networking peripheral devices such as those used for coupling to an Ethernet, token ring, Internet, or wide area network. It may also include any number of commercially available peripheral devices designed to communicate with remote computer peripherals such as scanners, terminals, specialized printers, or audio input/output devices. Communication device **125** may also include an RS232 or other conventional serial port, a conventional parallel port, a small computer system interface (SCSI) port or other data communication means. Communications device **125** may use a wireless means of data transfer devices such as the infrared IRDA protocol, spread-spectrum, or wireless LAN. In addition, communication device **125** is used in the preferred embodiment to couple the mobile playback device **212** to the client computer system **214** as described in more detail below. One other device used in the preferred embodiment is sound circuitry **130** either with attached speakers or headphones **132**, or with analog audio outputs suitable for input into audio reproduction equipment such as external amplifiers and speakers, cassette adapters, etc. Sound circuitry **130** is well known in the art for playing audio files. Alternatively, sound circuitry may be a radio transmitter which transmits audio data on a predefined frequency for reception and playback by a radio receiver. Other wireless methods are possible.

[0019] Note that any or all of the components of the system illustrated in **FIG. 1** and associated hardware may be used in various embodiments of the present invention; however, it will be appreciated by those of ordinary skill in the art that any configuration of the system may be used for various purposes according to the particular implementation. In one embodiment of the present invention, the data processing system illustrated in **FIG. 1** is an IBM® compatible personal computer (PC), an Apple MacIntosh® personal computer, or a SUN® SPARC Workstation. Processor **102** may be one of the 80X86 compatible microprocessors such as the 80486 or PENTIUM® brand microprocessors manufactured by INTEL® Corporation of Santa Clara, Calif.

[0020] The software implementing the present invention can be stored in main memory **104**, mass storage device **107**, or other storage medium accessible to processor **102**. It will be apparent to those of ordinary skill in the art that the methods and processes described herein can be implemented as software stored in main memory **104** or read only memory **106** and executed by processor **102**. This software may also be resident on an article of manufacture comprising a computer usable mass storage medium **108** having computer readable program code embodied therein and being readable by the mass storage device **107** and for causing the processor **102** to perform digital information library transactions and protocols in accordance with the teachings herein.

[0021] Digital Information Library System

[0022] **FIG. 2** illustrates the computer network architecture used in the preferred embodiment of the present invention. In general, the network architecture of the present invention includes a library site **250** coupled to a client site **210** via a conventional distribution network infrastructure **240**. This conventional distribution network infrastructure **240** can be implemented as a standard telephone connection provided between the library site **250** and client site **210** through an Internet provider to enable data communication on the Internet over a conventional telephone network. This

use of the Internet as a distribution network is well known to those of ordinary skill in the art. In an alternative embodiment having cable modem capability, communication over a conventional cable network is possible in lieu of communication over the telephone network. The cable network is typically much faster (i.e. provides a much greater bandwidth) than the standard telephone network; however, cable modems are typically more expensive than standard POTS (plain old telephone system) modems. In another alternative embodiment having conventional Integrated Services Digital Network (ISDN) capability, the distribution network **240** is accessed using an ISDN modem. Again, the ISDN network is typically faster than the POTS network; however, access to an ISDN network is generally more expensive. Cable modems and ISDN implementations are alternative communications media to the POTS implementation.

[**0023**] In addition, it will be apparent to those of ordinary skill in the art that other forms of networking may equivalently be supported by the present invention. For example, a wireless transmission means such as infrared or radio links may also provide the distribution network **240** described in the present application. As an alternative to the Internet, a proprietary network/bulletin board such as AMERICA-ON-LINE (AOL), or COMPUSERVE may be used.

[**0024**] Each of the servers at library site **250** and the client computer system **214** at client site **210** can be implemented as a computer system such as the one described above in connection with **FIG. 1**. It will be apparent to one of ordinary skill in the art that the library server **260**, authoring system **280**, and authorization server **270** can be remotely located yet networked together as a distributed system using the techniques described above. In addition, the present invention allows for multiple library servers, authoring systems and authorization servers. Conversely, the servers may be implemented as separate functions of a single machine. These alternative embodiments are illustrated in FIGS. **4-8** and are described in more detail below.

[**0025**] The mobile playback device **212** is a minimally configured, low-cost, standalone mobile unit for receiving and storing digital information files or programs as downloaded by library server **260** and client computer system **214** and for playing back the digital information files or programs for a user of the mobile playback device **212**. The mobile playback device **212** is temporarily removably coupled to the client computer system **214** while the download takes place. Once downloaded, the mobile playback device **212** may be detached from the client computer system **214** and used as a standalone digital information playback device. A co-pending U.S. patent application titled, "Interactive Audio Transmission, Receiving and Playback System", assigned Ser. No. 08/490,537, and assigned to the Audible Words Corporation of Montclair, N.J. describes the details of mobile playback device **212**.

[**0026**] In its basic form, the preferred embodiment of the present invention is a digital information library system providing selection of digital information programming on demand over a computer network. In an alternative embodiment, the digital information programming is selected via the computer network but delivered using mass storage media **241**. This alternative embodiment is described in more detail below.

[**0027**] The digital information library is an indexed collection of digital information programming, drawing content from digital information sources such as books, daily news and entertainment feeds, conferences and educational sources, other computer systems, the host on the World Wide Web (WWW) of the Internet, and customized audio or visual image programming. Other sources of the digital information content include, but are not limited to, conference or seminar proceedings, lecture or speech materials, language lessons, readings, comedy, customized spoken digests and related, "need-to-know" business information, computer software, local sound studio material, text to speech conversion of machine readable files, pre-recorded material from magnetic tape, CD-ROM, digital audio tape, or analog cassette tape. This digital information content is input as raw digital information content to authoring system **280** shown in **FIG. 2**. In an alternative embodiment, a raw digital information digitizer **307** is included for receiving raw input and converting the input to a digital form which can be manipulated as a digital information file.

[**0028**] In an alternative embodiment, the digital information comprises digitized image or graphics data used to produce visual images on a display screen or projection screen. These images may be included in the digital information retained and maintained by the library server **260**.

[**0029**] Authoring System

[**0030**] Authoring system **280** is used to edit, index, compress, scramble, segment, and catalog digital information content into digital information programs in digital information files, which are stored on mass storage media **241** or on library server **260** as scrambled and compressed digital information files **262**. The digital information programs are initially categorized according to traditional criteria (e.g. genre, modern fiction, mystery, adventure, romance, nonfiction, classics, self-help, science fiction, westerns, etc.). Categories associated with specific authors or publishers are also provided. Both unabridged and abridged titles are provided. In some circumstances, it may be necessary to digitize digital information content from an undigitized form. The raw information digitizer **307** is provided for this purpose. Authoring system **280** also partitions digital information content into segments, which can be identified, searched, and skipped over if desired. All of these functions are performed by authoring system **280**.

[**0031**] **FIG. 3** illustrates the authoring system **280** of the preferred embodiment. Authoring system **280** receives digital information content from a variety of conventional sources as raw digitized data. This digital information data is fed to three components of the authoring system **280** of the preferred embodiment. The digital information compressor **314** receives the raw digital data and compresses the digitized data. There are a variety of conventional techniques in existence for compressing digital data. These techniques can be optimized depending upon the type of digital data being processed. Thus, the present invention provides several compression methods and a means for the authoring system operator **305** to select between these methods based upon the category of digital information content **310** being input to the digital information compressor **314**. Alternatively, the selection of compression method may be performed automatically by interpretation of the digital information content **310** itself. A compressed digital information file is output by digital information compressor **314** to scrambler **318**.

[0032] The raw digital information content **310** is also fed to template header generator **312**. Each digital information file maintained by the library server **260** includes other descriptive information used to identify the file's content and to provide information used to process the digital information within the file. Each digital information file includes a template header, a descrambling map, selected preview clips, and the digital information programming itself. In the preferred embodiment, the template header comprises a number of attributes corresponding to the digital information in the file. For example, the digital information may be audio information generated from the content of a book or other published work. In this example, the audio file template header contains attributes including: 1) the title of a book, volume, or medium from which the digital information content originated, 2) the legal copyright associated with the digital information content, 3) audible title(s) of the content, 4) a table of contents of the content, and 5) playback settings for appropriately playing or rendering the digital information. The table of contents contains content navigation information including but not limited to: the number of chapters, the length of the program, and information indicative of the relevant content sections. The table of contents is generated with input from authoring system operator **305** or automatically by analysis of digital information content **310**. The descrambling map **322** is used to interpret the digital information after the digital information has been scrambled by scrambler **318** as described below. The preview clips **324** comprise short pre-generated portions of digital information content used to give a consumer a sense of the content of a particular digital information file. In the preferred embodiment, these previews are generated as conventional formatted files which can be directly played by sound generation circuitry **130** or rendered by other means. A digital information file can have several preview clips associated with it. The preview clips **324** are not compressed or scrambled in the preferred embodiment. The template header **312** remains with the digital information file as it is transferred to the network **240** or mass storage media **241**. The other descriptive information related to a digital information file is typically stored with digital information file, but is not required to be so stored.

[0033] Referring again to **FIG. 3**, template header generator **312** generates the template header given information from a particular portion of digital information content **310**. Input from Authoring System Operator **305** and Digital Information Compressor **314** may be solicited during the header generation process. The template header is provided to library server **260**. Other portions of the digital information file header are provided by scrambler **318** and preview generator **323**. These portions of the digital information file header are assembled into the header for a particular digital information file by library server **260**. The remainder of the digital information file is filled with compressed, scrambled, and segmented digital information content.

[0034] After digital information compressor **314** has compressed the raw digital information using a selected compression method suitable for the category of digital information, the scrambler **318** scrambles the digital information. The digital information is scrambled to prevent an unauthorized consumer from using the digital information. In the preferred embodiment, scrambler **318** uses a conventional encryption method to render the data unusable. A corresponding descrambling map **322** is generated to provide a means for descrambling the scrambled digital information file. A scrambling map **316** is used by scrambler **318** to scramble the digital information file. The scrambler **318** can encrypt the entire digital information file or selected critical subsets of the digital information file. The level of scrambling can be selected depending upon the capabilities of the authoring system **280**, the mobile playback device **212** and/or the anticipated software player **226** on client computer system **214**. In an alternative embodiment, a proprietary digital information format is used in lieu of scrambler **318**.

[0035] The scrambled digital information content is output by scrambler **318** to segmentation logic **326**. Segmentation logic **326** partitions the digital information content into blocks for efficient storage in and transfer to a mobile playback device **212** or software player **226** and for efficient navigation during playback. Transport integrity data is generated and appended to the segmented digital information. In an alternate embodiment, portions of the segmentation process may take place before or after digital information compressor **314** and scrambler **318**. Segmentation information may also be used in the header generation process by template header generator **312**. The compressed, scrambled, and segmented digital information blocks are provided to the library server **260** by authoring system **280**. Library server **260** assembles the segmented digital information blocks, the descrambling map **322**, the preview clip(s) **324**, and the template header **312** for a particular item of digital information content into a digital information program file or files, which are stored in a digital information program file storage area **262**. Other raw digital information content is converted into digital information files using the authoring system **280** in a similar manner.

[0036] Library Server

[0037] Referring again to **FIG. 2**, the library server **260** is responsible for maintaining the digital information program files **262** created by the authoring system **280**. In addition, the library server **260** receives requests for access to the digital information program files **262** from client computer systems **214** over network **240** and manages purchase and delivery of the selected digital information files and/or delivery of selected preview clips **324**. The library server **260** includes library management software **261** for performing these library server functions and a library key **263** used for the authentication protocol described below. Library management software **261** includes processing logic for receiving and responding to client computer system **214** requests for access and/or purchase of a digital information program file **262**. Upon receiving such a client request, library server **260** uses authorization server **270** to authenticate the request with client information **272** generated and maintained by library server **260** or authorization server **270**. The client information **272** includes client identifiers which are used to target content for playback on individual mobile playback devices **212** or software players **226**. Client information **272** may also contain client personal information, user content preferences, client billing history, player usage history, and player group lists. In an alternative embodiment, portions of client information **272** may instead be stored in server **260**. Using the authorization protocol described in more detail below, the library server **260** determines if the client request can be serviced. If approved, the library server **260** accesses the digital information program file(s) or

preview clip(s) requested by the client computer system **214**, delivers the selected preview clip(s) or builds encrypted, targeted, and digitally signed digital information files using the authentication protocol described in more detail below, and transfers the encrypted and compressed digital information file(s) to the requesting client computer system **214** via network **240**. Distributable mass storage media **241** may also be used as a delivery medium for the transfer of information to client system **214**. The client computer system **214** may then independently download the selected digital information files (or a subset thereof) into the mobile playback device **212** for subsequent playback. The library server **260** also collects usage statistics on the access history of the digital information files **262** and stores this usage data into usage statistic storage area **264**. The library server **260** also stores operating code segments (firmware) for the client browser **219**, software player **226**, and for mobile playback device **212**. This operating code can be downloaded to the client computer system **214** in the same manner as digital information files are transferred. Player configuration data for playback device **212** and software player **226** is stored on the library server **260** and can be customized or updated in the same manner as digital information files and firmware are transferred. Configuration data includes, but is not limited to, audio prompts, user interface options, group ID information, and information playback parameters. Player configuration data is transferred to client computer system **214**, software player **226**, or mobile playback device **212** as required according to client information **272**.

[**0038**] The library server **260** interfaces with a client application program or client browser **219** executing on client computer system **214**. The client browser **219** is used to make requests of library server **260** for various types of service including, but not limited to, searching the digital information files **262** for a desired program, previewing a selected preview clip associated with a digital information file **262**, purchasing a selected program, requesting operating code segments or player configuration data, and downloading the purchased program or other material to the requesting client computer system **214**.

[**0039**] The library server **260** interface with the authorization server **270** and client computer system **214** uses the unique authentication protocol and encryption protocol of the preferred embodiment of the present invention. The preferred embodiment of these protocols is described in the sections below.

[**0040**] Client Computer System

[**0041**] Referring again to **FIG. 2**, the client computer system **214** represents a consumer or end user computer system, typically a personal computer, such as the sample system illustrated in **FIG. 1**, with which a consumer may browse, preview, select, purchase, and take delivery of digital information content from digital information library server **260** across distribution network **240**. Client computer system **214** comprises client browser software **219**, a mobile device interface **221**, storage for encrypted and compressed digital information files **220** downloaded from the network **240**, software player **226**, and segment download data **222** derived from digital information files **220** for defining the storage segments in mobile playback device **212** and for assisting in the downloading of digital information files **220** from client computer system **214** to mobile playback device **212**. Client computer system **214** also includes a server public key **215** used for authenticating digital information and software files received from server **260**. Client browser software **219** provides the control logic with which the client or consumer accesses and purchases titles from the digital information library **262** of library server **260**. Client browser software **219** also provides control logic which requests and downloads configuration information or operating code from server **260**. The client browser software **219** can be configured to perform these operations without direct human intervention. The mobile device interface **221** is a software interface used to control the transfer of control information, operating code, and digital information files from client computer system **214** to mobile playback device **212**. Encrypted and compressed digital information files **220** are received by client computer system **214** from library server **260** over network **240**. In an alternate embodiment, distributable mass storage media **241** is used instead of network **240** to transfer information to client computer system **214**. The software player **226** is a software module used to emulate the operation of mobile playback device **212** and for playing digital information files through the sound circuitry **130** and audio output device **132** of client computer system **214**. Operating code and configuration information for the software player **226** can be downloaded or updated from the server **260** in the same manner as the mobile playback device **212** can be downloaded or updated. The software player **226** functionality is the equivalent of the functionality and operation of the mobile playback device **212**. Thus, the use of the term "player" throughout this document generally applies to both the mobile playback device **212** and software player **226**. Software players **226** are assigned unique player IDs and can be assigned group IDs that function similarly to IDs assigned to mobile playback devices **212**.

[**0042**] Mobile Playback Device

[**0043**] The mobile playback device **212** converts a digital information file into sound or displayable imagery which is played through audio output means or displayed on a display device. In the preferred embodiment, the mobile playback device **212** is a minimal capability, low-cost device primarily dedicated to playing audio files or displaying visual images or text on a display device. The mobile playback device **212** is minimally configured to retain its light-weight, low cost, and readily mobile features. The preferred embodiment does not therefore include the use of a portable personal computer or laptop computer as the mobile playback device **212**; because, such general purpose computing devices typically do not meet the light-weight and low cost constraints of the preferred mobile playback device **212**. Such general purpose computing devices typically have unnecessary functionality, more complicated interfaces, and may suffer cost and performance penalties in comparison to the special purpose mobile playback device **212**. In the preferred embodiment, the mobile playback device **212** includes a processor, memory, and an interface to client computer system **214** over which compressed digital information files **216** are received. As described in more detail below, mobile playback device **212** also includes a player ID **223**, group IDs **225**, and server public key **215** used for authenticating digital information and software files received from server **260** via client computer system **214**. The user controls the mobile playback device **212** using buttons and knobs provided on the device. These controls are used to navigate through digital information files **216**,

adjust configuration data and playback parameters, or perform other functions as directed by firmware stored in playback device **212**. When coupled to the player, client computer system **214** or other electronic devices can solicit user input from these controls. In an alternative embodiment, a set of additional user controls is provided on a remote control unit that is coupled to the player via a wired or wireless connection. Digital information output may be provided via a headphone jack, on board speaker, or wireless transmitter to a separate wireless receiver with speakers or headphones. Audio level can be adjusted with a volume knob. A wireless transmitter may contain an adjustment knob to adjust the transmission frequency or other transmission parameters. Visual information output is provided via LCD display, LED display, or outputs to a standard visual display device. The mobile playback device **212** contains a limited quantity of non-volatile memory, RAM, and ROM. Digital information content, configuration data, and operating code are stored in the memory space of the mobile playback device **212**. Configuration data includes but is not limited to: public and private IDs, content playback parameters, and user interface parameters. The use of non-volatile memory allows portions of the digital information content, configuration data, and firmware to be updated via download. Both digital information content and firmware (operating software) is stored in this memory device. Portions of the firmware and configuration information are stored permanently in a read only memory (ROM). An internal memory allocation method is used to track the content of mobile playback device **212** memory. This allocation method, in conjunction with segment navigation data **218**, also provides the means for locating desired digital information, program, configuration data, or header data resident in the mobile playback device **212** memory. The mobile playback device **212** includes an interface to the client computer system **214** through which the mobile playback device **212** receives compressed digital information files **216**, software updates, and configuration changes from client computer system **214**.

[**0044**] Downloading Digital Information Content, Software Updates, or Configuration Information from the Library Server to the Client Computer System

[**0045**] The client browser software **219** of client computer system **214** operates in cooperation with library management software **261** of library server **260** and the firmware resident on the mobile playback device **212** to provide a means by which a consumer may browse, preview, select, purchase, and take delivery of selected digital information content from digital information library server **260** across distribution network **240**. The digital information content is typically downloaded to the client computer system **214** at the time of purchase, but it is possible to download digital information content either, 1) sometime after the purchase, or 2) multiple times after an initial purchase. The client browser **219** can be configured to download content to client computer system **214** without user intervention. In addition, portions of the client computer system **214** software itself or mobile playback device **212** resident software/firmware may be downloaded or updated from library server **260**. The mobile playback device **212** resident software/firmware is downloaded through client computer system **214**. If library server **260** has an updated or more recent copy of client computer system **214** software or mobile playback device **212** software/firmware, the library server copy is downloaded to replace the outdated version of the corresponding client computer system **214** software or mobile playback device software **212**. The software is encrypted, scrambled, and digitally signed in a manner similar to the scrambling and delivery of the digital information files. Changes to the ID list, audio prompts, and other configuration data for playback device **212** can be downloaded in a manner similar to the downloading of software updates from library server **260**.

[**0046**] The preferred embodiment utilizes three authentication processes to protect the transfer of information from server **260** to client system **214** and playback device **212**. First, a point-to-point authentication protocol is performed whereby the library server **260** must verify that the requesting client computer system **214** is an authorized client and the client computer system **214** must verify that the library server **260** is an authorized provider. Secondly, a targeting protocol is performed whereby the library server **260** utilizes a set of identifiers (i.e. player IDs) for mobile playback devices **212** authorized to receive the selected download data from library server **260**. The mobile playback device identifiers are provided by client computer system **214** or are referenced from user profiles stored on library server **260**. In the targeting process, library server **260** formats and downloads data that can only be read by mobile devices **212** with these identifiers. Thirdly, a library server digital signature is appended to the downloaded data for use by the mobile playback device **212** to verify that the downloaded data was originated by an authorized library server. These three authentication processes of the present invention are described in detail in the following sections.

[**0047**] Point-to-Point Authentication Protocol

[**0048**] The library server **260**, client computer system **214**, and mobile playback devices **212** each have a unique verification sequence which is used to verify the authenticity of another system. In communications between library server **260** and client system **214**, both systems alternately act to (1) request verification of the other system and (2) provide an authenticating response to a verification request. Communication between mobile devices **212** and client computer system **214** use a similar authentication protocol, as well as real-time communication between mobile devices **212** and library server **260** via client system **214**. This verification sequence comprises a pre-defined set of bit streams or data structures which are sent by the requesting system (i.e. the system requesting verification) to the receiving system being authenticated (i.e. the respondent) in a point-to-point transmission. The receiving system must respond to the verification sequence in a pre-defined manner by sending particular response bit streams or data structures to the requesting system. If the appropriate response data from the respondent is received by the requesting system, the system being verified is considered an authorized system. Conversely, the system being verified is considered unauthorized if the appropriate response data is not received by the requesting system prior to a pre-defined time-out period. Both systems begin communication by acting as requesters and respondents in separate verification cycles. Upon completion of these point-to-point authentication cycles, further client/server processing only continues if both systems deem each other to be authorized systems.

[**0049**] In an alternate embodiment, point-to-point authentication is used in a subset of the communications among

library server **260**, client computer system **214**, and mobile playback devices **212**. In another embodiment, point-to-point authentication is not used and system security rests on the use of targeting and/or digital signature authentication.

[**0050**] Targeting Protocol

[**0051**] The targeting protocol of the present invention is a means and method for limiting the playback of digital information content, the adjustment of player configuration data, and the download of player operating code to a specified player **212**/**226** or a specified set of mobile playback devices **212**. Each player **212**/**226** contains a unique player ID **223**. The player ID **223** comprises a public player ID and a private player ID. The public player ID is a unique identifier and serves as a serial number for player identification. The private player ID is used to target data for individual mobile playback devices **212**. Private player IDs are never sent through any communications link or network path, except during installation. In the preferred embodiment, private player IDs should be sufficiently diverse, but need not be unique.

[**0052**] Mobile playback devices **212** may be logically grouped together using a Group ID. Digital information content, software, or configuration data changes may be targeted to a group of mobile playback devices **212** defined by a group ID. Each player **212**/**226** includes memory space for storage of one or more group IDs **225** of which the particular player **212**/**226** is a member. Each group ID includes a public portion and a private portion, each of which is equivalent to the public and private player IDs, respectively. Each group is identified by a uniquely valued public ID that is not shared with other player or group IDs. Digital information content, software, or configuration data can be targeted to a particular group ID in the same way as it would be targeted for a specific player ID. Mobile playback devices **212** in the same group share the same Group ID. A particular Group ID. is pre-defined as the global group to which all mobile playback devices **212** are a member. Mobile playback devices **212** may be members of more than one group. A particular player **212**/**226** is added to a new group by appending the new group ID to the set of group IDs **225** maintained in the particular player **212**/**226**. The new group ID is appended after the server **260** provides a public group ID and a group key to the player **212**/**226** via client computer system **214**. The player **212**/**226** generates a private group ID from the combination of the group key and the mobile playback device's **212** private player ID. As with the private player ID, the private group ID is never sent through any communications link or network path, except during installation. In an alternative embodiment, players receive the group private ID directly or by combining the group key with the players public ID or other known numeric value. In another alternative embodiment, the private group ID is not used in the targeting process and is not transferred to the player. The group assignment process may be restricted to using real-time communications between server **260** and the player via client system **214**, or it may take place sometime after group assignments have been downloaded to client system **214**. Having described the player IDs and group IDs defined in the present invention, the use of these IDs in the targeting protocol is described next.

[**0053**] Library server **260** includes a player ID table **266** as shown in **FIG. 2**. Player ID. table **266** includes a storage area for private IDs and public IDs. The private IDs are pre-loaded into player table **266** when a new mobile playback device is installed into the system or when a new group is established. In another embodiment, ID table **266** is a mathematical function which converts group or player public IDs. Public player and group IDs are sent by a client computer system **214** to the server **260** when the client computer system **214** desires to target a particular player **212**/**226** or set of mobile playback devices **212** to a particular specified digital information, software content, or configuration data selection. Digital information selection is made from the files **262** stored on library server **260**. Software or configuration data selection is made from files stored on server **260** or from data generated upon request by server **260**. Software content and configuration data is prepared and scrambled in a manner similar to the authoring process for digital information content. Once an association is made by client computer system **214** between a set of targeted public IDs and the associated data to be transferred from server **260**, library server **260** creates a targeted header for the selected files. The library management software **261** consults the public ID to private ID table **266** to locate the corresponding targeted private ID(s). The targeted header comprises a combination of the descrambling map **322** from the selected files with the private player IDs corresponding to the targeted mobile playback devices **212**. The descrambling map **322** is thereby encrypted using the secret IDs of the targeted mobile playback device(s) **212**. This targeted header is linked with the corresponding digital information or software content of the selected file in a network transport ready data block. A digital signature is applied to the data block as described below in connection with the data signature protocol. Transport integrity data (such as the use of checksums or cyclic redundancy check) is applied to the data block and the data block is sent to the client computer system **214** via network **240**. Because the data block can only be unscrambled using the corresponding descrambling block **322** in its header and because the descrambling block **322** was combined (i.e. encrypted) with a private ID known only by the targeted mobile playback device(s) **212**, only the targeted mobile playback device(s) **212** will be able to unscramble and read the data block. The selected digital information, software content, and configuration data is thereby targeted to a particular set of mobile playback devices **212**.

[**0054**] For small groups of mobile playback devices **212**, each targeted header of a digital information file may contain a plurality of descrambling maps, each associated with a different player **212**/**226**. In this manner, multiple mobile playback devices **212** can read a single file **220** stored on the client computer system **214**.

[**0055**] A person of ordinary skill in the art will note that alternative methods of targeting exist. In an alternative embodiment, library server **260** uses the targeted recipient's private player **212**/**226** identifier or the targeted group's private group identifier to generate scrambling map **316**. Descrambling map **322** is not stored with the file as it is already known by the recipient player or group. This method targets content to a single player **212**/**226** or group and achieves the identical result of preventing unauthorized playback of content.

[**0056**] In another alternative embodiment, library server **260** does not scramble the digital information content or

uses a known key to scramble the digital information content. In this embodiment, descrambling map **322** is unnecessary and is not stored with the file. Either the public or private player **212**/**226** identifier can be stored in the header for targeting identification purposes. Upon receipt of data from library server **260**, the player **212**/**226** checks if its player **212**/**226** identifier or group identifier is included in the header. This method assumes unmodified mobile playback devices **212** and achieves the identical result of preventing unauthorized playback of content.

[**0057**] In another alternative embodiment, the player IDs for the targeted mobile playback devices **212** are sent to the library server **260** by the client computer system **214** when the user registers with the library server **260** to obtain the user's client ID. In this alternative embodiment, these player IDs are stored on the library server **260** in a user profile. In this embodiment, the library server **260** manages the player IDs for the targeted mobile playback devices **212**.

[**0058**] Digital Signature Protocol

[**0059**] The third authentication protocol used in the present invention is the digital signature protocol. For selected data blocks generated by library server **260** and downloaded to a client computer system **214**, library server **260** uses its private library key **263** to apply a digital signature to the data block. The digital signature comprises a known bit string or data pattern which is combined with the data in data blocks that are downloaded from library server **260** to client computer system **214**. The library server **260** may perform this operation on all the data blocks or a selected subset of the data blocks. After a data block is downloaded to a player **212**/**226** through a client computer system **214**, the player **212**/**226** can retrieve the digital signature applied by the library server **260** using a public server key known to the player **212**/**226**. The player **212**/**226** can thereby verify that the data block originated with an authorized library server **260**. The public server key is also known to client computer system **214**, which can perform the identical operation to verify that the data block originated with an authorized library server **260**. In this embodiment, library server **260** performs signatures on the content. A person of ordinary skill in the art would realize that the signatures may also be performed on the digital information by authoring system **280**. The signatures may also be performed in a multiple step process shared by authoring system **280** and library server **260**.

[**0060**] In an alternate embodiment, digital signatures are applied to downloaded material by a trusted client computer system **214**. In another alternate embodiment, digital signatures are not applied to downloaded material and system security rests on the use of targeting and/or point-to-point authentication.

[**0061**] Downloading Digital Information Content, Software Updates, or Configuration Information from the Client Computer System to the Mobile Playback Device

[**0062**] In a first step, the client computer system **214** and the mobile device use the point-to-point authentication protocol described above to verify that an authorized mobile playback device **212** is communicating with an authorized client computer system **214**. If this is the case, the mobile playback device **212** transmits its memory map to the client computer system **214** via the mobile device interface **221**. A table of contents defining the available digital information files **220** and player configuration profiles resident in client computer system **214** is displayed along with the mobile playback device **212** memory map for a user of client computer system **214**. The user selects which files **220** of client computer system **214** should replace portions or segments of specified mobile playback device **212** memory as defined by the mobile playback device **212** memory map. Alternately, client browser **219** can be configured to automatically perform this selection process. In either case, the user is prevented from selecting digital information content larger than the available memory of playback device **212**. In addition, control software and/or configuration data for playback device **212** may be automatically updated by client computer **214**. The specified digital information files **220**, associated headers, operating code, or configuration data are thereafter downloaded into mobile playback device **212** memory. The mobile playback device **212** uses checksums to verify the integrity of the download. The mobile playback device **212** uses the server public key **215**, the header, and the digital signature to authenticate the download as described above. The header descrambling map is used by targeted mobile playback devices **212** to unscramble the downloaded data. In other embodiments, mobile playback device **212** may unscramble the downloaded data and/or decompress the downloaded data before authenticating the signature. Each segment of the digital information content may be independently authenticated and validated using any of the techniques described above. Digital information prompts on the mobile playback device **212** guide the user to the desired portion of the downloaded digital information content as specified by the table of contents residing in the header of the downloaded data. The user may preview selected portions of the digital information content by selecting a preview option. The preview option plays a predetermined portion of a selected digital information program. Upon selection of a particular digital information program, the selected digital information program is played for the user after the mobile playback device **212** converts the digital information content into sound or displayable imagery which is played through an audio output means or displayed on a display device.

[**0063**] The software player **226** of client computer system **214** may also receive digital information content in approximately the same form as the digital information content downloaded to the mobile playback device **212**; however, the digital information content for the software player **226** does not need to be downloaded to the software player **226**. The software player **226** has direct access to the digital information content; because, it shares memory and/or disk storage space with the client computer system **214**. Therefore, there are no downloading or memory map concerns. In the same manner as the mobile playback device **212**, the software player **226** performs digital signature verification, verification of checksums, and receiving targeted information. In an alternative embodiment, software player **226** may use a communication protocol similar to that of mobile playback device **212** when receiving digital information content, configuration information, and dynamically downloaded software.

[**0064**] **FIG. 4** illustrates an alternative embodiment of the present invention. As shown in **FIG. 4**, authoring system **280** can support a plurality of library servers **260**. Each library server can be configured to support a specific type of

digital information content. In the same manner described above, the client computer systems **214** access network **240** and obtain digital information content from any of the library servers **260** after performing the authentication process described above. Authorization server **270** is provided for this purpose. The configuration illustrated in **FIG. 4** provides a more distributed architecture thereby dispersing the load across several server platforms. A site with many client computer systems **214** may have its own library server **260** to reduce demand on network **240**. This architecture scales well as the number of client computer systems **214** grows and the content provided by the library server **260** grows.

[**0065**] **FIG. 5** illustrates another embodiment of the present invention except the library server **461** has been implemented as a plurality of separate processes or tasks **460** running concurrently on a single library server platform **461**. Each library server process **460** services requests for access to its corresponding portion of the digital information content. This content is created using authoring system **280** in the manner described above. The authorization server **270** is used to validate the links between the client computer systems **214** and the library server processes **460**. The configuration illustrated in **FIG. 5** is advantageous in that the convenience of a single server is maintained while the scalability of multiple libraries is also supported.

[**0066**] This concept can also be used for the authoring and authorization servers **280** and **270**, respectively. As shown in **FIG. 6**, the authoring system **280** and the authorization server **270** is implemented on a single platform **685** as authoring process **680** and authorization process **670**. These processes perform the same functions as described above, except the implementation provides the convenience of a single server and the scalability of multiple processes for the authoring and authorization tasks.

[**0067**] **FIG. 7** illustrates yet another alternative embodiment wherein the client computer systems **214** include a local library **710**. The local library **710** provides a local storage area and library access control functionality which provides access to a subset of the archived digital information from library server **260**. In the manner described above, the user of a client computer system **214** identifies the titles or items of digital information in library server **260** that the user wishes to access. In the preferred embodiment, these content selections are transferred to a client storage area **220** (as shown in **FIG. 2**) for subsequent downloading to mobile playback device **212**. The embodiment shown in **FIG. 7** expands upon the client storage area **220** and creates a local library **710**. The local library **710** is used for storage of selected content; but also for searching, sorting, categorizing, and abstracting the locally stored content. The local library **710** allows a client computer system **214** to maintain a small subset of the full library which may be used to create custom collections of content in a variety of user selected configurations. Client systems **214** may be permitted to access the contents of local libraries **710** on other client systems **214**. In a related alternate embodiment, library server processes **460** may also reside on selected client systems **214**. This embodiment allows client systems **214** to browse and purchase content that is scrambled, targeted, and delivered from library server process **460** executing on a locally positioned client system **214**. By maintaining the library locally, a portion of the network access and transfer overhead is eliminated.

[**0068**] **FIG. 8** illustrates another alternative embodiment of the present invention wherein the client computer system **214** is eliminated and the mobile playback device **212** is connected directly to the network **240** through network interface **810**. In the preferred embodiment, the mobile playback device **212** is a minimal capability device primarily dedicated to playing audio files or displaying visual images or text on a display device. The mobile playback device **212** is minimally configured to retain its light-weight, low cost, and readily mobile features. The preferred embodiment does not therefore include the use of a portable personal computer or laptop computer; because, such devices typically do not meet the light-weight and low cost constraints of the preferred mobile playback device **212**. However, the minimal mobile playback device **212** may be augmented to add network interface **810** which comprises a conventional hardware connector, hardware buffers and controllers, and firmware support for a particular conventional network protocol. For example, the mobile playback device **212** may be augmented with an integrated modem that includes a telephone jack with which the playback device may be connected to a telephone network. It will be apparent to those of ordinary skill in the art that network interface **810** may be implemented in a low cost and light-weight device such as mobile playback device **212**. Because the client system browser **219** would not be available in the alternative embodiment shown in **FIG. 8, a** simplified user interface may be provided in firmware or other non-volatile memory of mobile playback device **212** with which the user may select items of digital information for download and playback from library server **260**. As described above, the authentication process to validate the link between the mobile playback device **212** and the library server **260** must also be performed prior to user access to the library server **260** content. Alternatively, a client system **814** coupled to network **240** may be provided to support client browser **219** and thereby enable selection of items of digital information for download and playback from library server **260** directly to any of the mobile playback devices **212**. Client systems **814** may support local storage of digital information, software, and configuration data in a form similar to storage space **220** or local library **710**. In addition, a more simplified implementation of network interface **810** may be designed to communicate via network **240** to client system **814** instead of library server **260**.

[**0069**] In another alternative embodiment of the present invention, digital information programming selections are made using the client computer system **214** and library server **260** as described above; however, the selections are delivered on mass storage medium **241**. Mass storage medium **241** represents any of a variety of conventional mass storage technologies including CD-ROM, PCMCIA cards, DVDs, floppy disks, removable hard drives, digital magnetic tape, optical cards, flash memory or other optical, magnetic, electronic, or semiconductor memory devices.

[**0070**] Upon selection by a user of a client computer system **214**, selected programming is targeted and scrambled as described above and transferred to a selected mass storage medium **241** and mailed, hand-delivered, or held for pickup by the user. Once the user takes physical

possession of the selected mass storage media **241**, the selected programming may be read from the mass storage medium **241** by the client browser **219** and thereafter transferred to the mobile playback device **212** as described above. **FIG. 9** illustrates another embodiment of the system that does not include the use of client computer **214** to transfer data to mobile playback device **212**. Kiosk **910** consists of a computer system such as the one described above in **FIG. 1**. Kiosk **910** is a publicly accessible unit that can perform browse, content purchase, and download functions in a manner equivalent to a client computer system **214**. The kiosk **910** is special because it contains its own library server for fast local access and download of content. Kiosk **910** contains a mobile device interface **221**, a special version of client browser **219**, and local library server process **460**. Kiosk library server process **460** has local storage of scrambled and compressed digital information files **262**. These compressed information files **262** originate from remote authoring system **280** and may be delivered via physical transport of mass storage media **241** or via distribution network **240**. A customer operates client browser **219** to browse, select, and purchase digital information files that are delivered to the customer's mobile playback device **212**. Authentication, targeting, and download processes are performed within the kiosk by library server process **460** that is connected to remote authorization server **270** over network **240**. In a related embodiment, **FIG. 7** shows a client system **214** with local library **710** that can be converted into a kiosk with functionality similar to kiosk **910**. In this system, a special version of client browser **219** provides the same user functionality as the previous kiosk embodiment.

[**0071**] An alternate embodiment of the system uses a common communication network to connect all system components. In **FIG. 10**, network **240** is directly coupled to client system **214** and **814**, network interface(s) **810**, library server(s) **260**, authorization server **270**, and authoring system(s) **280**. One of ordinary skill in the art will realize that network **240** can also be segmented into a number of independent networks or communication links without changing the functionality of the system.

[**0072**] Thus, a method and apparatus for implementing a computer network based digital information library system employing authentication and encryption protocols for the secure transfer of digital information library programs, software, and configuration data to a client computer system and a mobile digital information playback device removably connectable to the client computer system is disclosed. Although the present invention has been described with respect to specific examples and subsystems, it will be apparent to those of ordinary skill in the art that the invention is not limited to these specific examples or subsystems but extends to other embodiments as well. The present invention includes all of these other embodiments as specified in the claims that follow.

We claim:

1. A computer based library and information delivery system for accessing and obtaining selected digital information files, said library and information delivery system comprising:

a library server having a plurality of digital information files;

a client computer system coupled to said library server over a network; and

a mobile device removably connectable to said client computer system, said client computer system including logic for requesting a download of a selected one or more of said digital information files from said library server, said client computer system further including logic for downloading said selected one or more of said digital information files to said mobile device.

2. The library and information delivery system as claimed in claim 1 further including an authoring system coupled to said library server for generating or modifying said plurality of digital information files.

3. The library and information delivery system as claimed in claim 1 wherein said plurality of digital information files includes audio files, spoken audio files, visual image files, text files, video files, multimedia files, operating code files, or configuration information files.

4. The library and information delivery system as claimed in claim 1 wherein said library server further includes library management software for interfacing with said client computer system and said plurality of digital information files.

5. The library and information delivery system as claimed in claim 1 wherein said client computer system further includes a client browser for interfacing with said library server and for making selections of one or more of said digital information files from said library server.

6. The library and information delivery system as claimed in claim 1 wherein said client computer system further includes a player for tangibly playing said selected one or more of said digital information files on said client computer system.

7. The library and information delivery system as claimed in claim 1 wherein said mobile device further includes a means for tangibly playing said selected one or more of said digital information files downloaded from said client computer system.

8. The library and information delivery system as claimed in claim 1 further including an authorization server coupled to said library server for authorizing access to said plurality of digital information files by said client computer system.

9. The library and information delivery system as claimed in claim 1 wherein said library server is a software process running on several computer systems.

10. The library and information delivery system as claimed in claim 2 wherein said library server and said authoring system run on different computer systems.

11. The library and information delivery system as claimed in claim 8 wherein said library server and said authorization server run on different computer systems.

12. The library and information delivery system as claimed in claim 1 further including an authoring system coupled to said library server for generating or modifying said plurality of digital information files, said library and information delivery system further including an authorization server coupled to said library server for authorizing access to said plurality of digital information files by said client computer system, said library and information delivery system running on a single computer system.

13. The library and information delivery system as claimed in claim 1 further including an authoring system coupled to said library server for generating or modifying said plurality of digital information files, said library and information delivery system further including an authoriza-

tion server coupled to said library server for authorizing access to said plurality of digital information files by said client computer system, said authoring system and said authorization server running on a different computer system than said library server.

14. The library and information delivery system as claimed in claim 1 wherein said client computer system further includes a local library for local storage of a selected portion of said plurality of digital information files.

15. The library and information delivery system as claimed in claim 1 wherein said mobile device further includes a network interface for direct communication with a network without the aid of a client computer system.

16. The library and information delivery system as claimed in claim 1 wherein said logic for downloading further includes logic for limiting said download based on available memory of said mobile device.

17. The library and information delivery system as claimed in claim 1 wherein said logic for downloading further includes logic for performing authentication on each segment of said digital information files downloaded to said mobile device.

18. The library and information delivery system as claimed in claim 1 wherein said client computer system further includes logic for previewing said digital information files prior to being downloaded to said mobile device.

19. The library and information delivery system as claimed in claim 1 further including authentication logic for authenticating access to said library, said authentication logic including a means for performing a point-to-point authentication protocol.

20. The library and information delivery system as claimed in claim 1 further including authentication logic for authenticating access to said library, said authentication logic including a means for performing a targeting authentication protocol.

21. The library and information delivery system as claimed in claim 1 further including authentication logic for authenticating access to said library, said authentication logic including a means for performing a digital signature authentication protocol.

22. In a computer based library and information delivery system, said library and information delivery system including a library server having a plurality of digital information files, a client computer system coupled to said library server over a network, and a mobile device removably connectable to said client computer system, a method for accessing and obtaining selected digital information files comprising the steps of:

requesting a download of a selected one or more of said digital information files from said library server; and

downloading said selected one or more of said digital information files to said mobile device.

23. The method as claimed in claim 22 further including a step of generating or modifying said plurality of digital information files.

24. The method as claimed in claim 22 wherein said plurality of digital information files includes audio files, spoken audio files, visual image files, text files, video files, multimedia files, operating code files, or configuration information files.

25. The method as claimed in claim 22 further including a step of activating library management software for interfacing with said client computer system and said plurality of digital information files.

26. The method as claimed in claim 22 further including a step of interfacing with said library server and for making selections of one or more of said digital information files from said library server.

27. The method as claimed in claim 22 further including a step of tangibly playing said selected one or more of said digital information files on said client computer system.

28. The method as claimed in claim 22 further including a step of tangibly playing said selected one or more of said digital information files downloaded from said client computer system.

29. The method as claimed in claim 22 further including a step of authorizing access to said plurality of digital information files by said client computer system.

30. The method as claimed in claim 22 further including the steps of generating or modifying said plurality of digital information files, and authorizing access to said plurality of digital information files by said client computer system, said library and information delivery system running on a single computer system.

31. The method as claimed in claim 22 further including a step of locally storing a selected portion of said plurality of digital information files.

32. The method as claimed in claim 22 further including a step of directly communicating with a network without the aid of a client computer system.

33. The method as claimed in claim 22 further including a step of limiting said download based on available memory of said mobile device.

34. The method as claimed in claim 22 further including a step of performing authentication on each segment of said digital information files downloaded to said mobile device.

35. The method as claimed in claim 22 further including a step of previewing said digital information files prior to being downloaded to said mobile device.

36. The method as claimed in claim 22 further including a step of performing a point-to-point authentication protocol.

37. The method as claimed in claim 22 further including a step of performing a targeting authentication protocol.

38. The method as claimed in claim 22 further including a step of performing a digital signature authentication protocol.

* * * * *