A. G. ANDERSON.

CLYSTERIZING APPARATUS.

APPLICATION FILED MAR. 23, 1914.

**1,112,107.**

Patented Sept. 29, 1914.

2 SHEETS—SHEET 1.

Fig. 1.

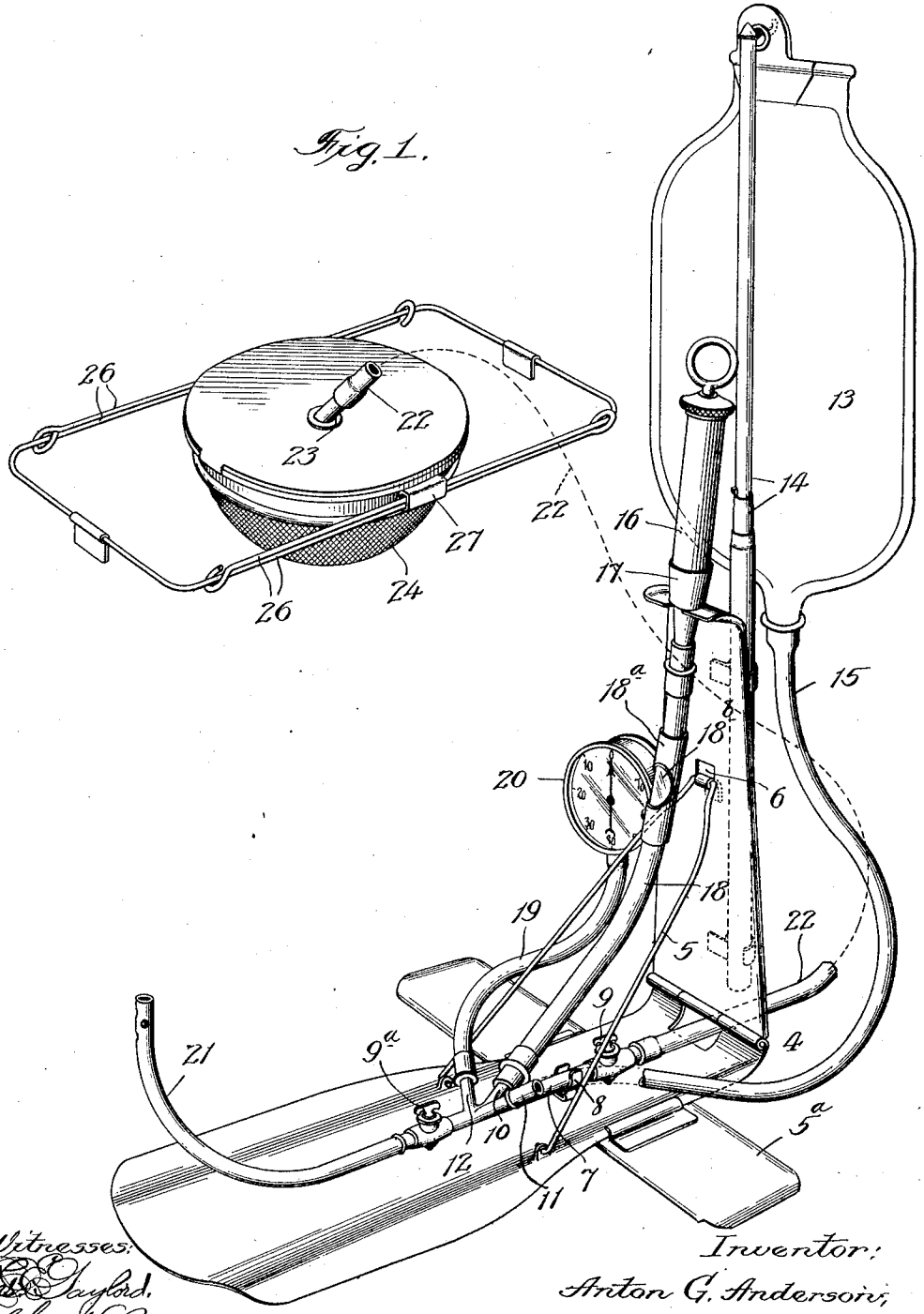


Witnesses:
[illegible] Gaylord.
Chas. H. Buell

Inventor:
Anton G. Anderson,
By Dyrenforth, Lee, Chritton and Wilson
Att'ys.

THE NORRIS PETERS CO., PHOTO-LITHO., WASHINGTON, D. C.

A. G. ANDERSON.
CLYSTERIZING APPARATUS.
APPLICATION FILED MAR. 23, 1914.

**1,112,107.**

Patented Sept. 29, 1914.
2 SHEETS—SHEET 2.

Fig. 2.

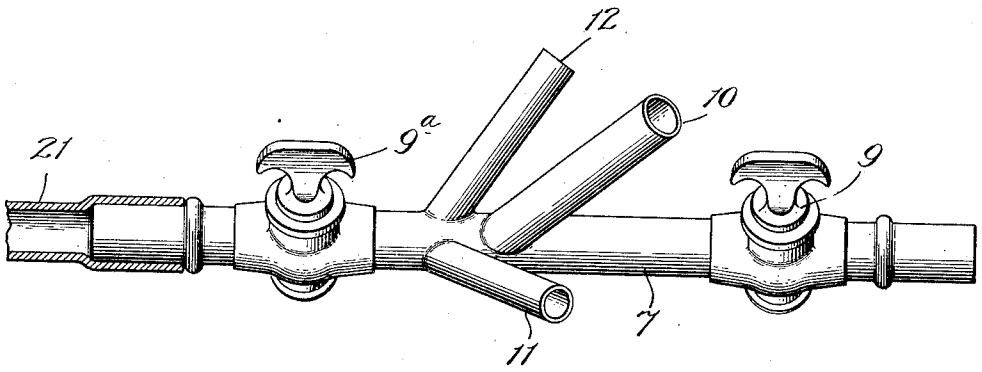


Fig. 3.

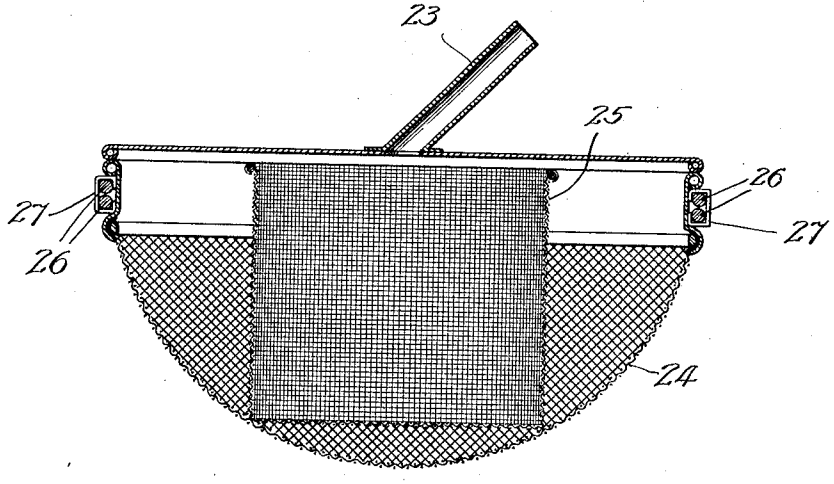


Witnesses:
[illegible] Gaylord,
Chas. H. Buell.

Inventor:
Anton G. Anderson,
By Dyrenforth, Lee, Chritton and Wiles,
Attys.

THE NORRIS PETERS CO., PHOTO-LITHO., WASHINGTON, D. C.

# UNITED STATES PATENT OFFICE.

ANTON G. ANDERSON, OF CHICAGO, ILLINOIS.

## CLYSTERIZING APPARATUS.

1,112,107. Specification of Letters Patent. **Patented Sept. 29, 1914.**

Application filed March 23, 1914. Serial No. 826,763.

*To all whom it may concern:*

Be it known that I, ANTON G. ANDERSON, a citizen of the United States, residing at Chicago, in the county of Cook and State of Illinois, have invented a new and useful Improvement in Clysterizing Apparatus, of which the following is a specification.

My invention relates to an improvement in clysterizing apparatus, whereby the liquid used for effecting the evacuation may be withdrawn with the accompanying matter by producing a vacuum, and discharge into a receptacle for scientific examination of such matter.

In the accompanying drawings, Figure 1 is a perspective view showing the entire apparatus, partly by diagrammatic representation; Fig. 2 is an enlarged perspective view showing the main pipe for attachment at one end of the clyster-tube and at the opposite end of an elevated bag or other form of reservoir, and provided between its ends with a cluster of branches for attachment of different parts of the apparatus, and Fig. 3 is an enlarged view in vertical section showing two screen receptacles of different meshes, one within the other.

A support 4, formed of hinged sections to adapt it to be folded, is provided, particularly when the apparatus is applied to human use, though it is also intended for veterinary use. When the support is unfolded a wire brace 5, pivotally attached at one end to one of the sections, hooks at its opposite end through an opening 6 in the other section to cause the sections to extend at a right-angle to each other. One of these sections is expanded to form a seat, and is braced by a cross-piece $5^a$, and the other vertical section serves for supporting parts hereinafter described.

The main pipe 7, which is releasably held in a spring clip 8 on the horizontal seat-section of the support, is provided between its ends, near which it contains shut-off valves 9 and $9^a$, with a cluster of obliquely-extending branches 10, 11 and 12. A bag 13 for holding the liquid to be used, is hung on a telescopically-extensible post 14 removably supported on the rear side of the support and has a flexible-tube connection 15 with the branch 11. A syringe-like pump 16 fits removably but tightly in a socket 17 seating in the recessed, forwardly-turned upper end of the back of the support and connected by a flexible tube 18 with the branch 10. The tube 18 contains a metal section $18^a$ provided with a glass-covered inspection-opening $18^b$. With the branch 12 is connected, by a flexible tube 19, a vacuum-gage 20 hung on the vertical support-back. A clyster-pipe 21 extends from the forward end of the main pipe, and a flexible tube 22 connects the rear end of the main pipe with a nipple 23 extending inclinedly from an opening in the hinged cover of a wire-mesh pan 24 having centrally seated in it a cup 25 constructed of a relatively-finer wire-mesh. A support 26, formed of telescopically connected bail-like sections, carries the pan at sleeves 27 on diametrically-opposite sides of the sheet-metal binding about the open end of the pan, to which the cover is hinged; and this support is adapted to be extended to sustain the pan on the seat of a water-closet, commode, or the like, and to be folded for compactness when the apparatus is out of use and its parts are disassembled.

To use the apparatus with its parts in place as represented in Fig. 1, and the patient seated on the support 4 with the tube 21 inserted, the valve 9 being closed and the valve $9^a$ open, liquid from the bag 13 flows into the person. The pump-piston is then reciprocated to alternately withdraw the water from the bowels and force it back into them, thereby to cause thorough mixing of the water with and loosening of the bowel contents; and each outward stroke of the piston, by producing in the tube 18 a vacuum, the desired degree of which will be indicated on the gage 20, forces the matter into that tube, wherein its condition may be inspected through the opening $18^b$. At the proper time, determined by the condition referred to, the valve 9 is opened and the aforesaid contents flow through the tube 22 into the cup 25. By working the pump at this time the flow may be forced through the tube 22 into the cup. In instances where required the described operation, involving closure of the valve 9 and reciprocating the pump-piston, and then opening that valve for producing the discharge into the cup, may be repeated as often as desired, for thoroughness of evacuation, using a fresh supply of the water in each instance. On entering the cup 25, the liquid portion will strain off into the pan 24 and thence discharge into the bowl or other receptacle over

which it is seated, leaving the solid matter retained in the cup for examination at a convenient time and place.

What I claim as new and desire to secure by Letters Patent is:—

1. In a clysterizing apparatus, the combination of a main pipe having branches extending from it between its ends, a clyster-pipe on one end of the main-pipe and a discharge-tube on the opposite end thereof, a liquid-supply tube connected with one of said branches, and a pump having a tube-connection with another of said branches.

2. In a clysterizing apparatus, the combination of a main pipe having branches extending from it between its ends, a clyster-pipe on one end of the main-pipe and a discharge-tube on the opposite end thereof, a liquid-supply tube connected with one of said branches, and a pump connected with another of said branches by a tube containing an inspection-opening.

3. In a clysterizing apparatus, the combination of a main pipe having a cluster of branches extending from it between its ends, a clyster-pipe on one end of the main-pipe and a discharge-tube on the opposite end thereof, a liquid-supply tube connected with one of said branches, a vacuum-gage connected with another of said branches, and a pump having a tube-connection with another of said branches.

4. In a clysterizing apparatus, the combination of a main pipe having valves near its opposite ends and branches extending from it between the valves, a clyster-pipe on one end of the main pipe and a discharge-tube on the opposite end thereof, a liquid-supply tube connected with one of said branches, and a pump connected with another of said branches.

5. In a clysterizing apparatus, the combination of a main pipe having branches extending from it between its ends, a clyster-pipe on one end of the main pipe and a discharge-tube on the opposite end thereof, a liquid-supply tube connected with one of said branches, a tube connected at one end with another of said branches and terminating at its opposite end in a socket, and a pump fitting said socket.

6. In a clysterizing apparatus, the combination of a valved main pipe having branches extending from it between its ends, a clyster-pipe on one end of the main pipe, a screen-cup containing covered pan having a tube connection with the opposite end of the main pipe, a liquid-supply tube connected with one of said branches, and a pump having a tube-connection with another of said branches.

7. A clysterizing apparatus comprising, in combination, a folding support, a valved main pipe removably secured on one section of said support and having branches extending from it between its ends, a clyster-pipe on one end of the main pipe, a screen-cup containing covered pan having a tube-connection with the opposite end of the main pipe, a liquid-holder on the other section of said support having a tube-connection with one of said branches, a pump on said other support-section having a tube-connection with another of said branches, and a vacuum-gage on said last-named support-section having a tube-connection with another of said branches.

ANTON G. ANDERSON.

In presence of—
F. A. FLORELL,
A. C. FISCHER.

Copies of this patent may be obtained for five cents each, by addressing the "Commissioner of Patents, Washington, D. C."