No. 873,684. PATENTED DEC. 10, 1907.

W. F. RICE.

CORE BOX.

APPLICATION FILED APR. 4, 1906.

3 SHEETS—SHEET 1.

Fig. 1.

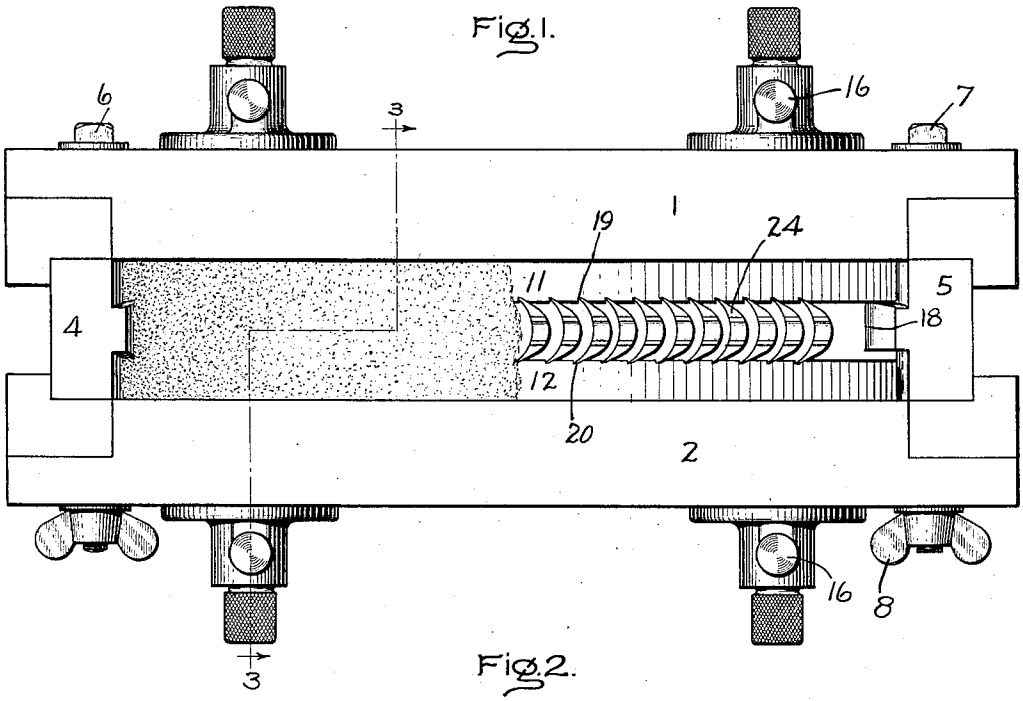

Fig. 2.

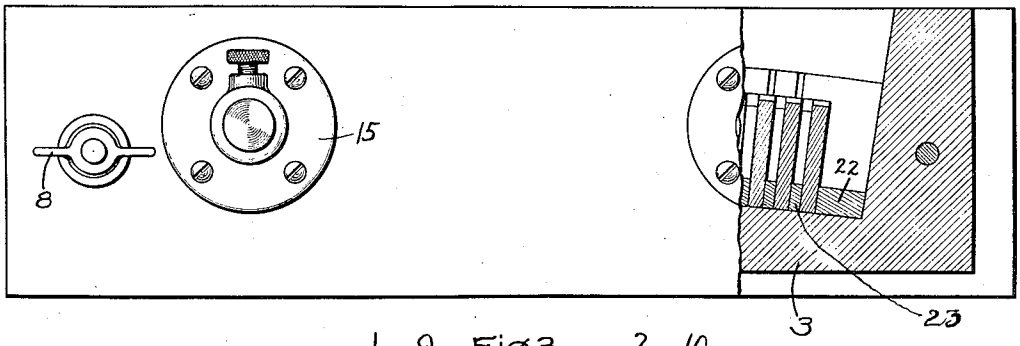

Fig. 3.

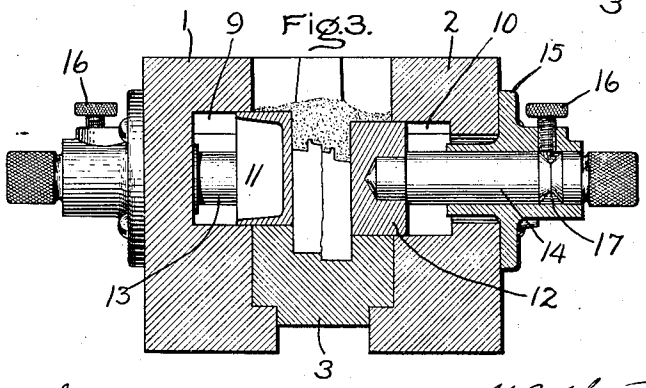

Witnesses:

Lloyd C. Bush

Helen Orford

Inventor

Walter F. Rice

by Allen B. Davis

atty

No. 873,684. PATENTED DEC. 10, 1907.

W. F. RICE.

CORE BOX.

APPLICATION FILED APR. 4, 1906.

3 SHEETS—SHEET 2.

Fig. 4.

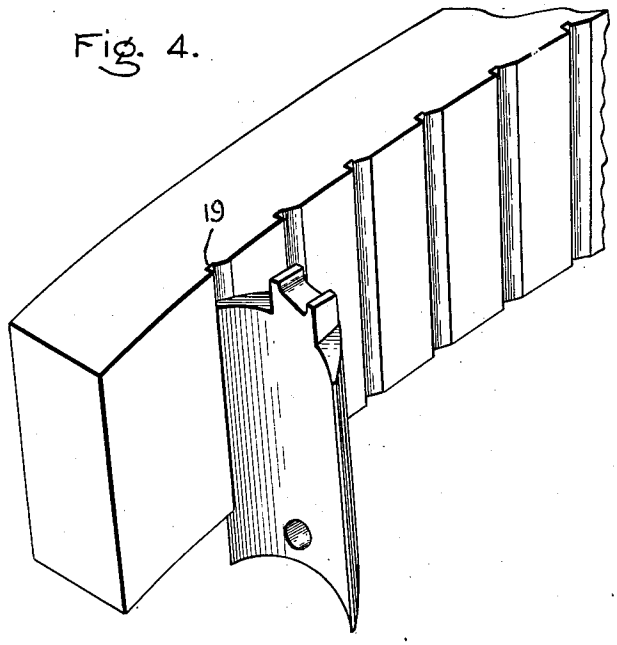

Fig. 7.

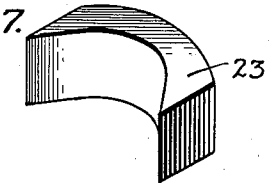

Fig. 5.

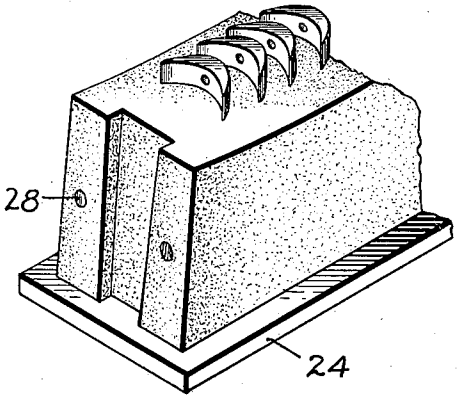

Fig. 8.

Fig. 6.

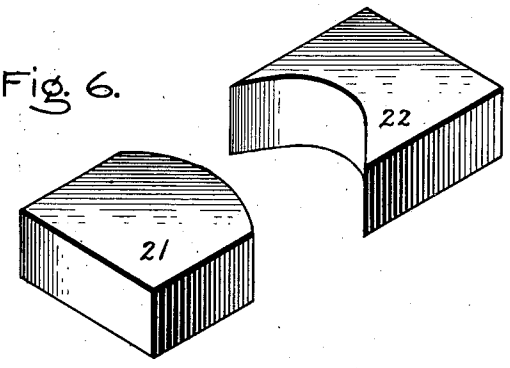

Witnesses:

Lloyd C. Bush

Arlen A. Ford

Inventor

Walter F. Rice

by Albert G. Davis

Atty.

No. 873,684. PATENTED DEC. 10, 1907.

W. F. RICE.

CORE BOX.

APPLICATION FILED APR. 4, 1906.

3 SHEETS—SHEET 3.

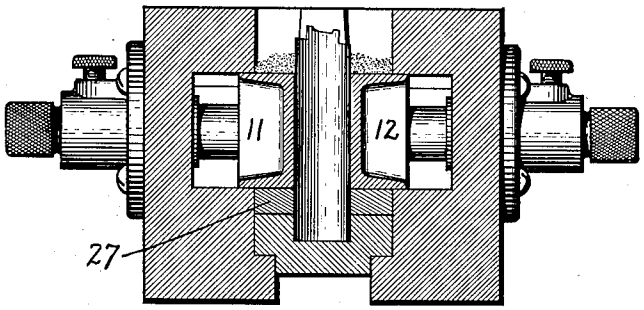

Fig. 10

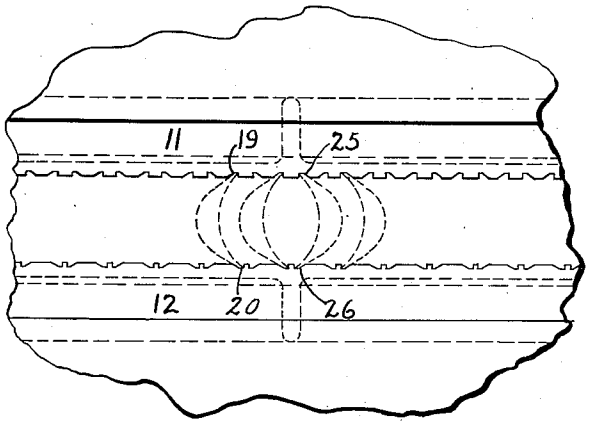

Fig. 9

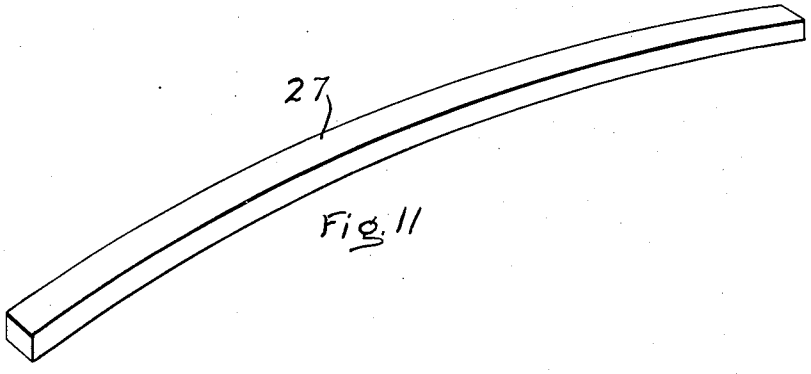

Fig. 11

Witnesses:
Lloyd C. Bush
Helen Orford

Inventor:
Walter F. Rice,
By Albert G. Davis
Atty

UNITED STATES PATENT OFFICE.

WALTER F. RICE, OF QUINCY, MASSACHUSETTS, ASSIGNOR, BY MESNE ASSIGNMENTS, TO GENERAL ELECTRIC COMPANY, A CORPORATION OF NEW YORK.

CORE-BOX.

No. 873,684. Specification of Letters Patent. Patented Dec. 10, 1907.

Application filed April 4, 1906. Serial No. 309,745.

To all whom it may concern:

Be it known that I, WALTER F. RICE, a citizen of the United States, residing at Quincy, county of Norfolk, State of Massachusetts, have invented certain new and useful Improvements in Core-Boxes, of which the following is a specification.

In a type of steam turbine with which I am familiar the buckets or blades are made of a hot rolling alloy, a certain number of which are afterwards put into a suitable core and the base or support formed by pouring molten metal around the corresponding exposed ends of the adjacent buckets. Forming bucket segments in this manner requires a good deal of care, first to insure proper entrance and exit angles for the walls in contact with the steam, and second to insure the proper pitch and longitudinal disposition of the buckets.

The present invention has for one of its objects to improve the construction of the core boxes whereby more uniform results may be obtained than hitherto, and the cost of making the cores reduced.

A further object of the invention is to provide a core box of improved construction which is adapted for use with right or left hand buckets, and is also capable of use with buckets of different lengths.

In the accompanying drawings, which illustrate certain of the embodiments of my invention, Figure 1 is a plan view of a core box; Fig. 2 is a view in side elevation with certain of the parts broken away; Fig. 3 is a cross section taken on line 3—3 of Fig. 1; Fig. 4 is a perspective view of one of the guide plates showing the manner of holding a bucket by its edge; Fig. 5 is a perspective view of the core showing the ends of the bucket protruding therefrom; Fig. 6 is a perspective view of one of the blocks employed to aline the buckets within the core box; Fig. 7 is a perspective view of a space block inserted between the buckets while the core is being formed; Fig. 8 is a perspective view of one of the end spacing blocks; Fig. 9 is a plan view of a slight modification showing each of the guides provided with a double set of slots or notches, one set being arranged for right hand buckets and the other set for left hand buckets; Fig. 10 is a cross section of a slightly modified form of box arranged to receive deeper buckets; and Fig. 11 is a perspective view of a filler strip.

The box comprises two removable side portions 1 and 2, a base portion 3 and end portions 4 and 5, the latter being secured to the base. The base and side portions are shouldered as shown in Figs. 1 and 3. In order to make a good fit and to preserve the proper relation of the parts, the parts of the box are secured by the transverse bolts 6 and 7, each of which is provided with a wing nut 8, or equivalent clamping device. The upper surface of the bottom of the box is formed on the arc of a circle and the radius of curvature depends upon the diameter of the wheel or support adapted to receive the bucket segment when finished. The ends 4 and 5 of the box extend radially for an axial flow turbine, and from the same center. The buckets when placed within the box also extend radially from the same center.

The sides of the box are chambered out at 9 and 10 to receive the segmental guide plates at 11 and 12. These guide plates are movable to and fro within the side pieces by means of the rods 13 and 14. Each guide piece is provided with two of these rods so as to maintain the parallel relation between the guides. Each rod passes through a head 15 which is secured to the box by screws or other means. In the head is a screw 16 having a beveled end adapted to engage a "V" shaped groove 17 in the rod and force the same inwardly for the purpose of taking up any slight play which may exist after the buckets are inserted between the guides. It is important to provide for this since otherwise one or more of the buckets may be somewhat displaced when the sand is rammed between them. Instead of using the screw 16 and groove 17, equivalent means may be provided for this purpose.

Both of the guide plates are movable and in order to insure their occupying their proper position between the sides of the box, stops 18 are provided at opposite ends. Preferably the stops are somewhat narrower than the actual width of the buckets, so as to permit of the latter being securely clamped in position. Commonly one of the guide plates is moved up against the stop and clamped in position, the other guide plate is then moved to approximately its final position, the buckets inserted in place and afterward the second guide plate adjusted and clamped by means of the screws 16.

The opposite surfaces of the guides are pro-

vided with notches 19 and 20. These notches or grooves occupy radial planes extending from the same center. They may be directly opposite each other or displaced as shown. It is important to accurately locate the position of these notches or grooves, one with respect to the other, so that the entrance and exit angle of the buckets when fused or cast into the base will be accurate and in accordance with certain described conditions which need not be mentioned here.

At opposite ends of the box are space blocks 21 and 22 made of wood or metal and of the character shown in Figs. 6 and 8. These blocks engage with the ends of the box and buckets and cut out the sand at these points. By making them of different lengths the number of buckets cast into the support can be changed. By making these blocks removable, it is possible to substitute new ones when for any reason a space between the end buckets and the ends of the box is varied or when it is desired to vary the exposure of the bucket ends. For example, I may substitute for the guide plates shown others having a different pitch with different distances between the end bucket and the ends of the box, in which case the dimensions of the blocks 21 and 22 are correspondingly changed. Between each two buckets is a space block 23 made of wood or metal of suitable shape to expose the ends of the buckets when the mold is finished and to form a support for the sand between the buckets. The depth of the space blocks 21, 22 and 23 determines the length of the bucket which shall project beyond the core and be cast or fused into the base.

The operation is as follows assuming the box to be assembled: The space blocks 23 and end blocks 21 and 22 are all inserted in the groove in the base piece 3—and preferably they are the same width as the buckets to cut out the sand—the guide plate 11 is moved up against the stop 18 and the screws 16 arranged to clamp it in place. The guide plate 12 is then moved to approximately the position shown. The buckets 24, which have been previously formed and cut to a desired length and width and provided with a cover-securing tenon at the top and a hole at the bottom to receive metal, are inserted between the guide plates and held at their edges by the notches 19 and 20. The screws 16 holding the guide plate 12 are then screwed down forcing the guide plates to clamp the buckets between them. Sand of any suitable core-making composition is then rammed in between the buckets until it is about flush with the guide plates. The screws 16 on one side of the box are then backed off and by means of the rods 14 one of the guide plates—as 12 for example—is withdrawn into the recess or chamber 10, it being noted that the guide plate is guided by the top and bottom walls thereof and also by the base 3. The arrangement of the parts is such that sand is prevented from working back into the chamber. After the guide plate is moved into the recess 10 it will be noted that the buckets are still held in their proper alinement by reason of the edges which are engaging the guide plate 11 and also by the sand which fills the spaces between them and which has been rammed to a greater or less extent. After the space formerly occupied by the guide plate 12 has been filled with sand and properly rammed, the screws 16 clamping the guide plate 11 are unscrewed and the guide plate 11 removed into the recess 9. The buckets are now held by the sand between them and by the sand on the top and one side. Sand is then rammed into the space formerly occupied by the guide plate 11 and the space above the buckets entirely filled so that the sand is flush with the top of the box. An iron plate is then placed on top of the box and the box as a whole inverted, so that the plate is at the bottom. The wing nuts 8 are then unscrewed and the retaining bolts 6 and 7 removed. This permits the side pieces 1 and 2 together with the guide plates 11 and 12 to be removed. The next step is to remove the bottom and end pieces 4 and 5, which, being connected together, can be removed as a unit. The space blocks 21, 22 and 23 are then removed. This last operation leaves the core and the buckets in the condition shown in Fig. 5, ready for baking. The parts of the core box are then re-assembled, after which the process of making cores may be continued. After the cores have been sufficiently baked they are inserted in a flask or mold, containing suitable sand, in the usual way and the molten metal introduced through a sprue hole and gate. After the metal is cooled the flask is opened and the core material and molding sand removed in the usual way. The casting is then snagged and is ready for the machine operations.

The guide plates in the construction described are arranged to receive only one kind of buckets. In Fig. 9 is shown in plan view guide plates 11 and 12, each of which are provided with notches or grooves 19 and 20 to receive one kind of buckets, for example left hand buckets, and with notches or grooves 25 and 26 to receive the edges of other buckets, as for example, right hand buckets. Instead of providing separate sets of notches for left and right handed buckets, I may employ separate sets of notches for the same kind of buckets, but set so that the entrance and exit angles differ from those shown.

It frequently happens that it is desirable to cast longer buckets in the cast than the

one shown, the pitch diameter remaining the same. In order to adapt the box for such buckets, I provide a new base and end pieces 4 and 5, which being of simple construction cost but very little. This differs from the one shown in Fig. 3 principally in that the base is thinner and is provided with a segmental filling strip 27. This strip extends longitudinally of the box and is located directly underneath the guides 11 and 12 when the latter are in position to engage the buckets. I may dispense with this filling strip under certain conditions and depend upon the sand which works into the space now occupied by the filling strip, to temporarily secure the buckets in place; when the guide plate is moved back the space can, of course, be filled and rammed as hard as is necessary.

I have shown buckets which are of a length less than the distance between the top of the base 3 and the upper side of the box, but the box can be used for buckets which, when inserted in place, extend above the upper surface of the box. In this case the box is turned over on its side and one of the guide plates removed, after which a metal plate 24, such as is shown in Fig. 5, is placed on the upper side and the core as a whole turned over to bring the other side of the box on top, after which it is removed. After the core is mounted on the plate it is put in an oven and baked in a manner well understood. In forming the cores, wires 28, Fig. 5, may be inserted therein for strengthening purposes.

The box shown is made of wood and under most conditions will be found to be satisfactory, but where the box is to be used extensively it may be made of metal, the parts of which are suitably constructed so as to make it as light as possible.

In accordance with the provisions of the patent statutes, I have described the principle of operation of my invention, together with the apparatus which I now consider to represent the best embodiment thereof; but I desire to have it understood that the apparatus shown is only illustrative and that the invention can be carried out by other means.

What I claim as new and desire to secure by Letters Patent of the United States, is:—

1. A core-box having a chamber arranged to receive the article to be embedded in the core, a guide arranged to hold the said article in a definite position in the chamber while the core is partially formed, and a means for moving the guide and article relatively to each other to form an additional space to receive the material of which the core is composed.

2. A core-box having a chamber arranged to receive the article to be embedded in the core, guides situated on opposite sides of said article to hold it in place while the core is partially formed, and means for moving the guides independently to form spaces to receive additional core material.

3. A core-box comprising a base, ends and sides, one of the latter being removable, a guide carried by the removable side, and means for moving the guide with respect to said side to afford space to receive additional core material.

4. A core-box comprising a base, ends and sides, means for securing the parts together, guides carried by the sides and adapted to engage and hold the article or articles to be molded into the core, and means for moving the guides one at a time out of engagement with the said article or articles to enable additional core material to be packed first on one side of said article or articles and then on the other.

5. A core-box comprising a base, ends and sides, means for removably securing the sides to the base, movable opposed guides, means on the guides to engage and hold the articles to be molded into the core, a device for moving one guide and its said means away from the other after the core is partially formed to provide additional space for core-forming material, and a second device for moving the other guide to afford additional space for core-forming material on the opposite side.

6. A core-box comprising a base, ends and sides, means for removably securing the sides to the base, longitudinally-extending guides to hold the articles to be embedded in the core, the guides being carried by and removable with the sides, recesses in the sides, and means for withdrawing the guides from their initial position into the recesses to afford additional space for core-forming material.

7. A core-box comprising a base, ends and sides, oppositely disposed guides arranged to engage with and hold the articles to be embedded in the core in proper alinement, space-blocks fitted in between said articles at their ends so that the latter will be exposed when the core is completed, means for moving the guides toward and away from each other, and devices for clamping said means.

8. A core-box comprising a base, ends and sides, longitudinally-extending guide plates forming segments of a cylinder, each plate being provided with radial notches adapted to engage the edges of the articles to be embedded in the core and preserve their alinement, means extending between said articles to prevent the molding material from covering their ends, and means for withdrawing the guides independently so that the spaces thus formed at the sides of the said articles can be separately filled with molding material to complete the core and prevent the alinement of said articles from being disturbed.

9. A core-box comprising a base, ends and removable side pieces, opposed guide-plates carried by the sides, a stop to limit the inward movement of one of the guide-plates, and means for moving the other guide-plate inward until the articles to be molded into the core are clamped between the guides.

10. A core-box comprising a base, ends and removable sides, opposed guide-plates located within the box, a stop to limit the inward movement of one of the guide plates, means for moving the guide-plates toward and away from each other to provide spaces to receive material forming the sides of the core, means for holding the guide-plates firmly in contact with the articles to be embedded in the core, and spacers located between the ends of the said articles and between them and the ends of the box to prevent the molding material from covering the ends of the said articles.

11. A core-box comprising a base, ends and removable sides, opposed guide-plates located within the box, having notches arranged in sets, one set being for one kind of articles and the other for a different kind of articles adapted to be embedded in the core, and means for moving the guide-plates away from each other to afford spaces to receive the molding material forming the sides of the core after the core has been partially formed.

12. A core-box comprising a base, side and end portions, the base determining the longitudinal position of the articles to be embedded in the core, guides which engage the edges of the said articles to preserve their alinement, and means to clamp and withdraw the guides from said articles.

13. A core-box comprising a base, side and end portions, guides which engage the articles to be embedded in the core to preserve their alinement, filler strips situated in line with the guides to temporarily keep the molding material from said articles, and means for removing the guides to afford additional space for the core-making material.

14. A core-box comprising a base, side and end portions, guides having sets of notches arranged to engage the articles to be embedded in the core and preserve their alinement, one set being intended for right-hand, the other for left-handed articles, space-blocks located between the said articles to keep the molding material out of contact with their ends, and means for moving the guides.

In witness whereof, I have hereunto set my hand this 27th day of March, 1906.

WALTER F. RICE.

Witnesses:

LUCY C. HOLLIS,

SAMUEL T. MACQUINN.