May 9, 1933. W. F. RICHTER ET AL 1,907,667

PROCESS OF TREATING RAYON

Filed Dec. 31, 1930 3 Sheets-Sheet 1

Fig. 1.

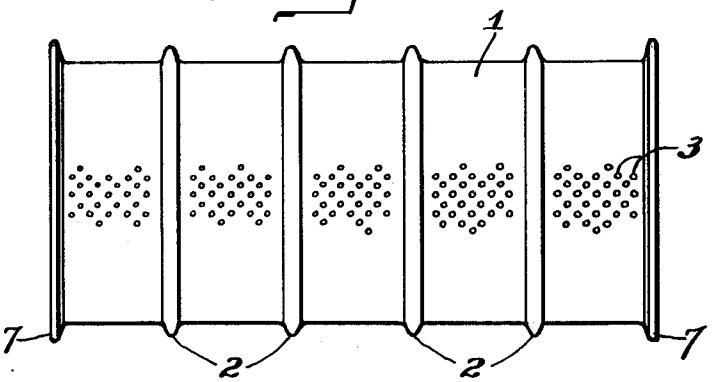

Fig. 2.

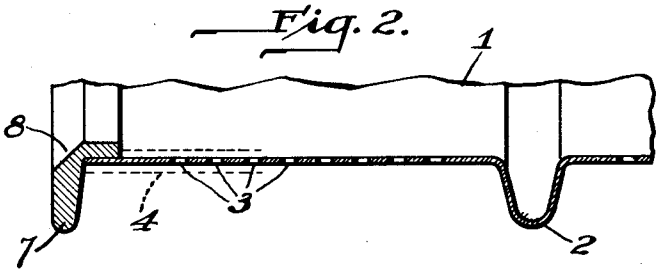

Fig. 3.

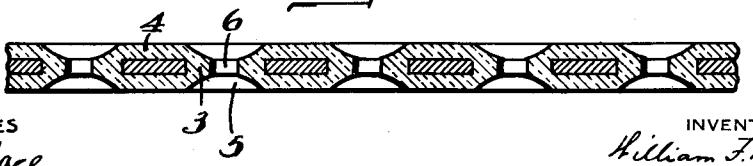

WITNESSES
A. B. Wallace.
J. B. Flick.

INVENTORS
William F. Richter
and Harold E. McGrery
by Brown & Critchlow
their attorneys.

May 9, 1933. W. F. RICHTER ET AL 1,907,667

PROCESS OF TREATING RAYON

Filed Dec. 31, 1930 3 Sheets-Sheet 2

Fig. 4.

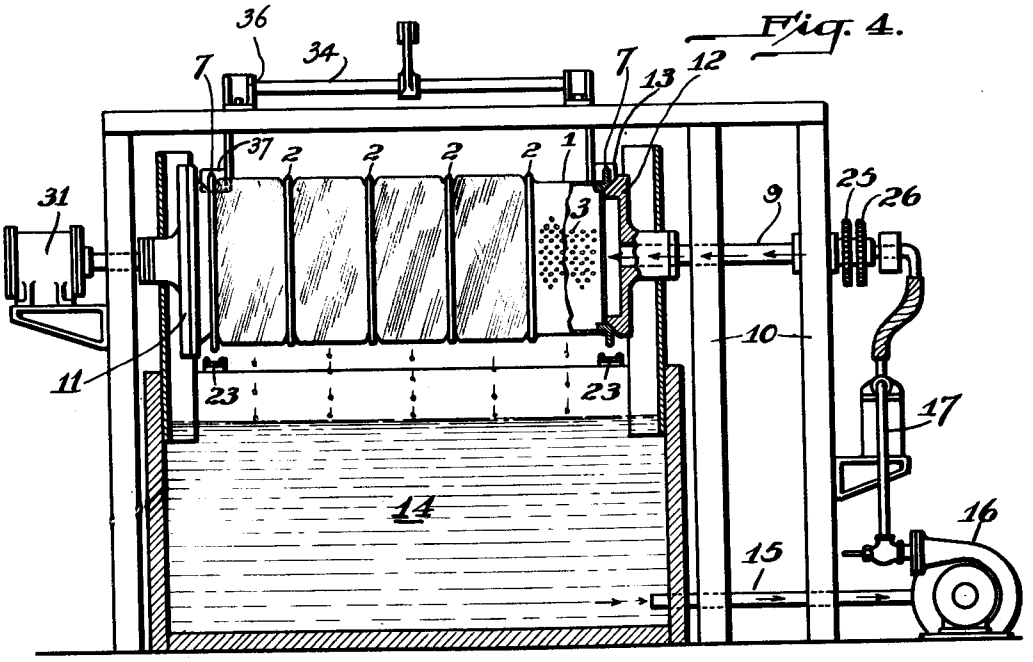

Fig. 7.

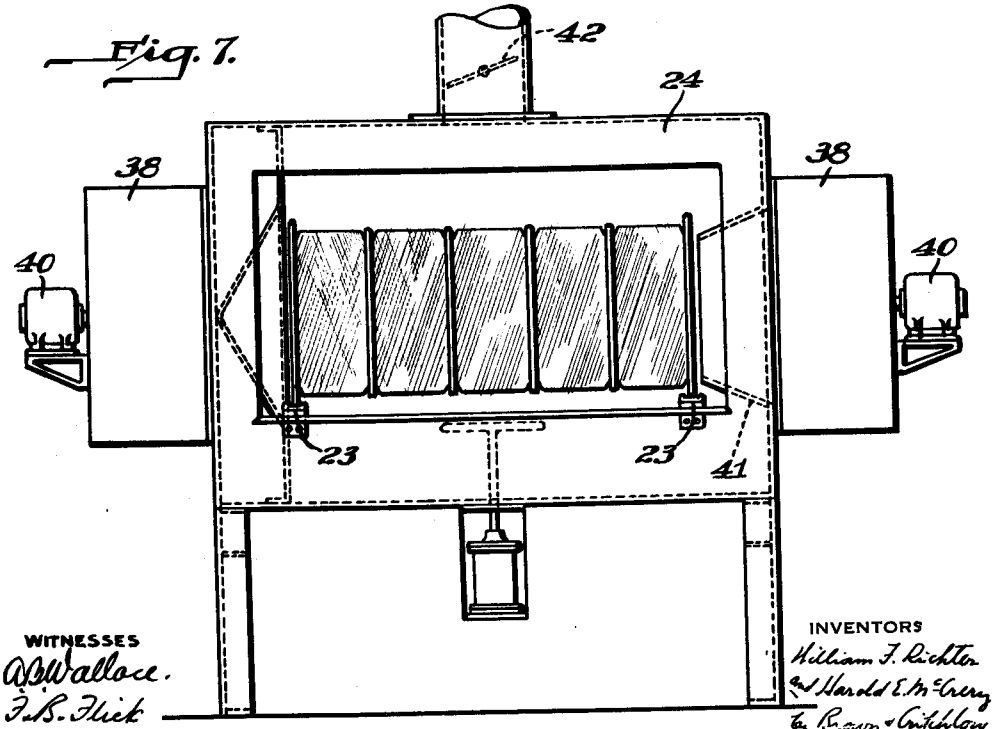

WITNESSES
A. B. Wallace.
F. B. Flick

INVENTORS
William F. Richter
and Harold E. McCrery
by Brown & Critchlow
their attorneys.

May 9, 1933. W. F. RICHTER ET AL 1,907,667

PROCESS OF TREATING RAYON

Filed Dec. 31, 1930 3 Sheets-Sheet 3

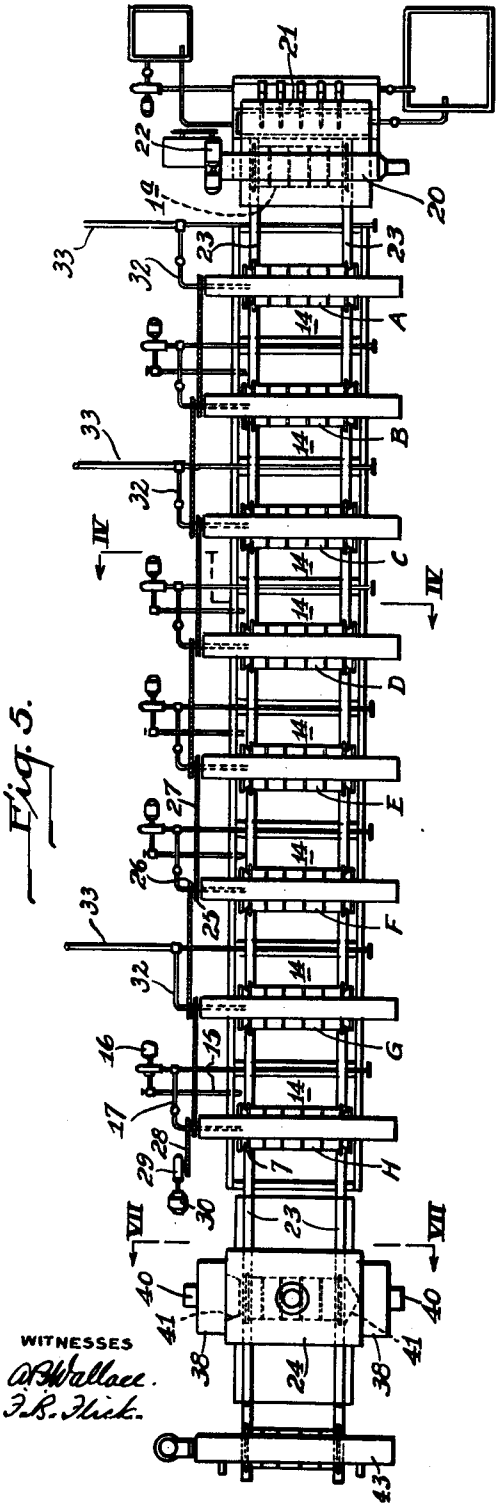

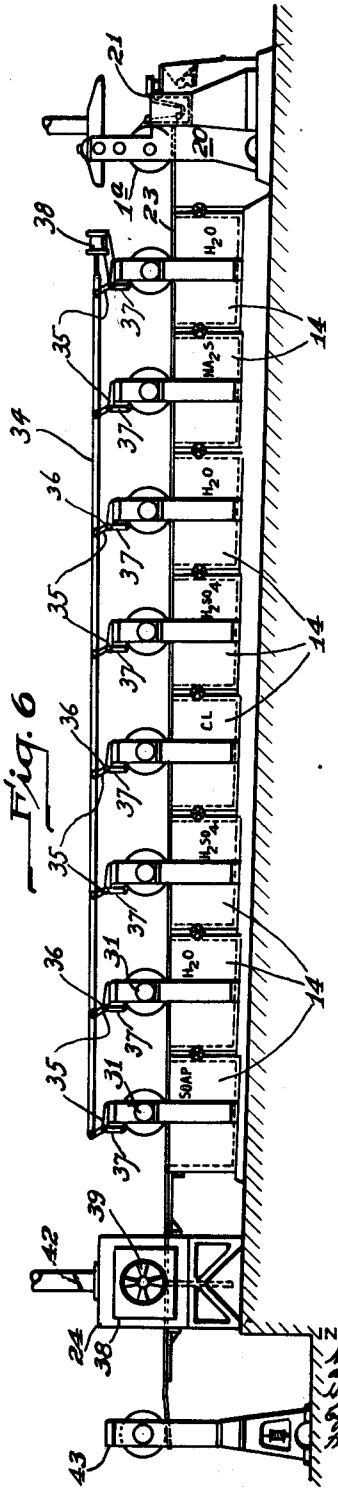

WITNESSES
A. H. Wallace.
J. R. Flick.

INVENTORS
William F. Richter
and
Harold E. McCrory
by Brown & Critchlow
their attorneys.

Patented May 9, 1933 1,907,667

UNITED STATES PATENT OFFICE

WILLIAM F. RICHTER, OF APOLLO, AND HAROLD E. McCRERY, OF PITTSBURGH, PENNSYLVANIA, ASSIGNORS TO CHEMICAL HOLDING CORPORATION, OF APOLLO, PENNSYLVANIA, A CORPORATION OF DELAWARE

PROCESS OF TREATING RAYON

Application filed December 31, 1930. Serial No. 505,749.

This invention relates to the treatment of artificial filaments intended for textile and the like uses, and particularly to the collection of viscose rayon and its treatment with washing and other liquids.

It is among the objects of the invention to provide a method of collecting and treating such filaments after their precipitation, which is simple and easily practiced, provides a product of high quality, and which, as compared with prior practice, minimizes fraying and mechanical destruction of the filaments, effects more uniform liquid distribution during treatment and provides a product of higher quality, and affords marked economies in treating times and amounts of liquid required.

A further object is to provide means upon which artificial silk and the like may be reeled for washing and other treatments, which provides for the collection and treatment of the material in relatively large units, is simple, sturdy, easily used, and which is particularly adapted for use in the practice of the method just referred to.

Other objects will appear from the following description:

The invention may be described in connection with the accompanying drawings, in which Fig. 1 is an elevation of the preferred embodiment of the drum provided by the invention; Figs. 2 and 3 enlarged fragmentary sections through an end portion and the body of the drum, respectively, showing details of construction; Fig. 4 an elevation taken on line IV—IV of Fig. 5, showing a treating apparatus embodying the drum shown in Figs. 1 to 3, for use in the practice of the invention; Figs. 5 and 6 plan and side elevation views respectively of an apparatus comprising a plurality of treating units; and Fig. 7 an end elevation of a drier unit, taken on line VII—VII, Fig. 5.

For brevity of reference the method and apparatus provided by the invention will be described as applied to the production of viscose rayon. It will be understood, however, that they are applicable equally to other products, such as artificial wool, and other filaments of this general type.

In accordance with the method thus provided freshly precipitated rayon is wound upon a hollow drum provided in its rayon-collecting body portion with a plurality of perforations, and after a suitable amount of rayon has been collected upon the drum, water or other treating liquid is allowed to pass outwardly through the perforations under the pressure due to its gravity head alone, while rotating the drum in the direction in which the rayon was wound upon it.

The perforations referred to are of a special type which confer particular benefits and advantages. These comprise relatively closely spaced perforations of small diameter through the shell which terminate in depressions of greater size formed in the surface of the shell. Preferably the depressions are of cup-like form, with the perforations located substantially centrally of the base, or lowest point, of the depressions. Most suitably these depressions are formed on both surfaces of the shell. In other words, in the preferred embodiment the surfaces of the body portion of the drum are provided with a plurality of opposed concavities having their bases connected by a perforation through the shell.

After the rayon has been wound upon it the drum is partly filled with water or other liquid, which is allowed to flow or seep through the perforations under its gravity head alone, and liquid is added to replace that which flows out until the treatment has been completed. In prior procedures the treating liquids have been applied under pressure, either by forcing it outwardly through a spool under pressure, or by sucking it inwardly into the spool. The pressures used have caused the liquids to contact with considerable force with the rayon, which has resulted in substantial mechanically destructive effect upon the filaments. It is well known in the art that considerable breakage or fraying of filaments frequently occurs during liquid treatments.

We have found that particular advantages attend the use of large reels provided with perforations of the type referred to. The combination of the small diameter perfora-

tions and the larger depressions at their ends produces a spraying effect of liquid passed through them. In this manner the mechanical action of the liquid upon the filaments is much more gentle than was the case in pressure treatments, and mechanical destruction and fraying are minimized or eliminated. The spraying action furthermore provides more uniform action and distribution of the liquid.

A further advantage of the method provided by the invention results from rotation of the drum during treatment in the same direction in which the rayon was wound upon it after precipitation. This results in a liquid flow tangential to the filaments, while the liquid flows away from the filaments in the same direction in which the precipitating bath flowed from it during winding. Such uni-directional flow of all of the liquids to which the products are exposed tends to provide more uniform action and more thorough removal of impurities, while accelerating the treatments. All of these factors combine to give a product of improved quality.

Having reference now to the drawings, with which the preferred embodiment of the invention may be explained, Figs. 1 to 3 represent the drum. It comprises a substantially cylindrical hollow body portion 1 upon which the rayon is wound. Preferably the surface of the drum is divided into a number of separated rayon-collecting portions, it being preferred to provide one such section for each spinneret. This may be done in any suitable manner, for example by forming swells 2 in the shell.

The rayon-collecting section of the drum is provided with a plurality of perforations of the type described hereinabove. They may be formed in the drum itself, but because such drums are often attacked by the liquids used, the surfaces are preferably covered with a protective coating. In such instances the better practice is to form the outer depressions in the coating.

This may be done in the manner shown in Figs. 2 and 3. As shown by Fig. 2, shell 1 is provided with relatively large perforations 3 spaced at relatively close intervals, successive rows of perforations being preferably staggered. A layer 4 of coating material, Fig. 3, such as chemical rubber, is then applied to the drum to cover its exposed surfaces. The coating material is depressed into the perforations 3, forming diaphragms which are perforated centrally of their bases, either by drilling openings of small diameter through the diaphragms, or by molding the perforations when the coating material is applied. In this manner the substantially plane rayon-collecting surface is interrupted by a plurality of depressions 5 connected by perforations 6 to similar depressions inside of the shell.

In one operative embodiment of the invention satisfactory results were obtained with drums 37½ inches long, having an outside diameter of 16 inches, and formed from 16 gauge plate. The drums were divided into five rayon-collecting sections by swells formed seven inches apart from center to center. They were then coated with $\frac{3}{16}$ inch of rubber after being provided with perforations $\frac{5}{16}$ inch in diameter, spaced $\frac{9}{32}$ inch from center to center. In order to prevent treating liquid from escaping at the edges it is preferred to leave an unperforated section at each edge of the rayon-collecting section, and in the embodiment referred to the perforated sections were 4½ inches wide. Generally spherical depressions having an outer diameter of $\frac{5}{16}$ inch, and about $\frac{1}{16}$ inch deep were formed in the rubber coating, and the diaphragms thus formed were drilled to provide perforations $\frac{3}{32}$ inch in diameter.

Although various forms of drum may be used, it is preferred in the practice presently to be described to use drums having open ends, these being closed by removable heads for treatment. In this embodiment the ends of the shell are provided with rings 7 whose outer diameter is greater than that of swells 2, and which are provided on their inner faces with a chamfered portion 8 adapted to cooperate with a movable head to form a liquid tight seal.

In the use of this drum the practice of the invention rayon from a precipitating bath is wound upon it while being rotated between a pair of adjustable heads which cooperate with rings 8. At the end of the winding operation treating liquid, such as water, is run into the drum to fill it to an appropriate height, and while rotating the drum in the same direction the liquid is permitted to flow outwardly through the perforations under the pressure due to its gravity head. This may be accomplished in a variety of ways, one of which is shown in Figs. 4 to 7.

Having reference to Fig. 4, the unit comprises a framework indicated by the numeral 10 which supports a pair of opposed rotatably mounted heads 11 and 12 having inner faces 13 chamfered to engage chamfer 8 on rings 7. Head 11 is movable axially of the drum, any suitable means, such as a hand wheel and screw mechanism, not shown, being used for that purpose. Head 12 is rotatably mounted in fixed position, and it is driven positively by appropriate means.

Treating liquid is introduced into the drum through a hollow trunnion 9 which serves to support head 12 also. Mounted below the drum is a tank 14 having an outlet

conduit 15 to a pump 16 which passes liquid drawn from tank 14 through a pipe 17 to hollow trunnion 9, and thence to the interior of the drum.

The drum having been engaged by heads 11 and 12, rayon is wound upon it, suitable means being provided to form a proper lay of the thread. When sufficient thread has been wound, water is introduced through trunnion 9, or pump 16 is started in order to pass an appropriate treating liquid into the drum. The height to which the drum is filled with liquid will depend in part upon the size of perforations in the drum, and upon the particular gravity head which it is desired shall exert its effe t in the washing treatment. In general, it is preferred to use a liquid height equal to about 75 per cent of the diameter of the drum, so that in washing with water using the embodiment described above the drum will contain about 200 pounds of water.

No external pressure is applied to the liquid, which flows out through the perforations under its own head. Since the drum is rotated while containing the liquid, the major portion of the liquid flows tangentially of the rayon, and falls downwardly into tank 14, from which it may be recirculated to the drum. The direction of flow of liquid is indicated by arrows in Fig. 4.

Most artificial filaments of the general type herein contemplated require a series of treatments, such as washing with water after precipitation, followed by various chemical and washing treatments for the purpose of preparing the filaments for their ultimate use. In such instances the treatments are applied without removing the rayon from the drum upon which it was initially wound. A single unit like that just described may be used, the liquid in tank 14 being withdrawn for successive treatments. For most purposes, however, it is preferred to pass the drum with its rayon successively to a series of stations each comprising a unit similar to that described above. Such an arrangement is shown in Figs. 5 and 6.

As here indicated a drum 1*a* is mounted in the manner just described, between opposed heads supported in a frame 20 adjacent a spinning apparatus indicated generally by the numeral 21. The drum is driven by a motor 22, which may be used also to operate the laying mechanism. The spinning and laying mechanism may assume any of the conventional forms known in the art, and they require no further description.

Extending from the collecting drum is a downwardly inclined trackway 23 which passes to a series of units similar to that of Fig. 4, and finally to a drier 24. These units preferably correspond in number to the number of treatments which the material is to receive. For example, in the production of viscose rayon the rayon may be treated successively with water, sodium sulfide solution for desulfurizing, water, a sour or sulfuric acid wash, chlorine solution for bleaching, a second sour wash, water, and finally, a soap solution. In the apparatus shown separate units are provided for each of these treatments, these being designated A to H respectively.

The units are driven in tandem by a pinion 25 and gear 26 mounted on trunnions 9, each pinion being connected to the gear on the next succeeding unit by a chain 27, and gear 26 on the last unit being driven through a chain 28 and reduction gearing 29 connected to a motor 30.

In each of the units of this assembly the axis of rotation of the heads 11 and 12 is positioned somewhat above that of the drum as it rests on tracks 23, so that the heads will raise the drum from the tracks in engaging rings 7. In this embodiment head 11 of each unit is connected to a piston actuated in a cylinder 31, whereby the head may be moved inwardly and outwardly according to need. After sufficient rayon has been wound upon drum 1*a*, head 11 is backed off, thereby lowering the drum to tracks 23, on which it rolls by gravity to unit A, where it is washed with water in the manner described hereinabove. After being washed the drum is released, and it passes to unit B in which the rayon is desulfurized. From thence it passes successively to units C to H, receiving appropriate treatments at each station. The most satisfactory results are obtained by rotating the drums slowly, for example 15 R. P. M. has been found to be suitable.

As indicated in Fig. 4, the treating solutions used in units B, D, E, F and H may be circulated continuously by means of pumps 16 described in connection with Fig. 4. Units A, C and G are supplied with water by conduits 32 connected to a water line 33, the water passing through the drum being permitted to go to waste. In all cases the liquid level is preferably maintained substantially constant during treatment by adding liquid to compensate for that which seeps through perforations 5—6.

In order conveniently to control movements of the drums in passing to successive stations, means are provided for simultaneously releasing all of the drums at the respective stations, and for mechanically stopping them at the succeeding unit. In its simplest form such means comprises a pair of reciprocable levers 34 mounted one on each side of and above the apparatus shown in Figs. 5 and 6. These levers are provided at each station with bell cranks 35 pivotally mounted in supports 36 carried by framework 10, and the lower arm of each of the cranks is provided with a stop member 37.

Levers 34 are connected at one end to piston-actuated mechanism, indicated generally by the numeral 38, whereby all of the drums may be released or stopped simultaneously.

After treatment at the last station, the drum rolls on tracks 23 into drier 24, which in the form shown comprises a housing provided at each end with a heating element 38 of any suitable type, for example a fan 39 driven by a motor 40, which forces air over steam coils, not shown, through funnel members 41 into the interior of the drum, forcing it outwardly through the perforations. A damper exhaust control 42 draws off the air with its contained moisture. The sides of the drier through which the drum is received and discharged are closed in any conventional manner during drying. After having been properly dried the drum is discharged from the drier, and the completely treated material is then fabricated as desired. For example, in the case of rayon it may be passed to a twisting machine 43, the rayon being supplied to the twisting mechanism directly from the drum.

Various advantages of the method and apparatus provided by the invention have been pointed out, and others will be discerned by those skilled in the art. Among these are the economies which result from the use of large drums adapted to receive the product from a bank of spinnerets, as compared with the single reels of small capacity which have characterized the prior art. Handling of the material is greatly reduced also. So uniform and thorough action is obtained that the times of treatment may be reduced from those which have been considered standard practice. And concomitantly there is substantial reduction in the amount of liquid needed. For example 7½ pounds of rayon wound upon a drum embodying the invention may be washed satisfactorily with 150 gallons of water,—which represents a very significant saving commercially over the present practice, since particularly pure water is required.

According to the provisions of the patent statutes, we have explained the principle and mode of operation of our invention and have described what we now consider to represent its best embodiment. However, we desire to have it understood that, within the scope of the appended claims, the invention may be practiced otherwise than as specifically illustrated and described.

We claim:

1. A process of treating rayon and the like precipitated fibers, comprising winding the material upon a drum the outer surface of which is provided with a plurality of cup-like depressions having centrally of their bases perforations of small diameter, partly filling the drum with treating liquid, and rotating the drum while permitting said liquor to pass through said perforations under the pressure due to its gravity head only.

2. A process of treating rayon and the like precipitated fibers, comprising winding the material upon a drum provided in its body portion with a plurality of substantially uniformly spaced small perforations the outer ends of which terminate in the bases of cup-like depressions in the drum surface, partly filling said drum with a treating liquid and permitting said liquid to ooze through said perforations under the pressure due to its gravity head only, and simultaneously rotating the drum in the direction in which the material was wound upon it.

3. A process of treating rayon and the like precipated fibers with a plurality of different liquids, comprising winding the material upon a hollow drum having in its body surfaces a plurality of opposed concavities connected by perforations of small diameter, supporting the drum at a treating station, partly filling the drum with a treating liquid and permitting it to flow through the perforations and treat the material under its gravity head alone, and simultaneously rotating the drum in the direction in which the material was wound upon it, and when treatment at said station is complete moving the drum successively to different stations and repeating such treatment with different liquids.

In testimony whereof, we hereunto sign our names.

WILLIAM F. RICHTER.
HAROLD E. McCRERY.