No. 812,266. PATENTED FEB. 13, 1906.

C. C. HILL, DEC'D.

C. B. HILL, EXECUTRIX.

PUMPING APPARATUS.

APPLICATION FILED DEC. 23, 1904.

2 SHEETS—SHEET 1.

Fig. 1.

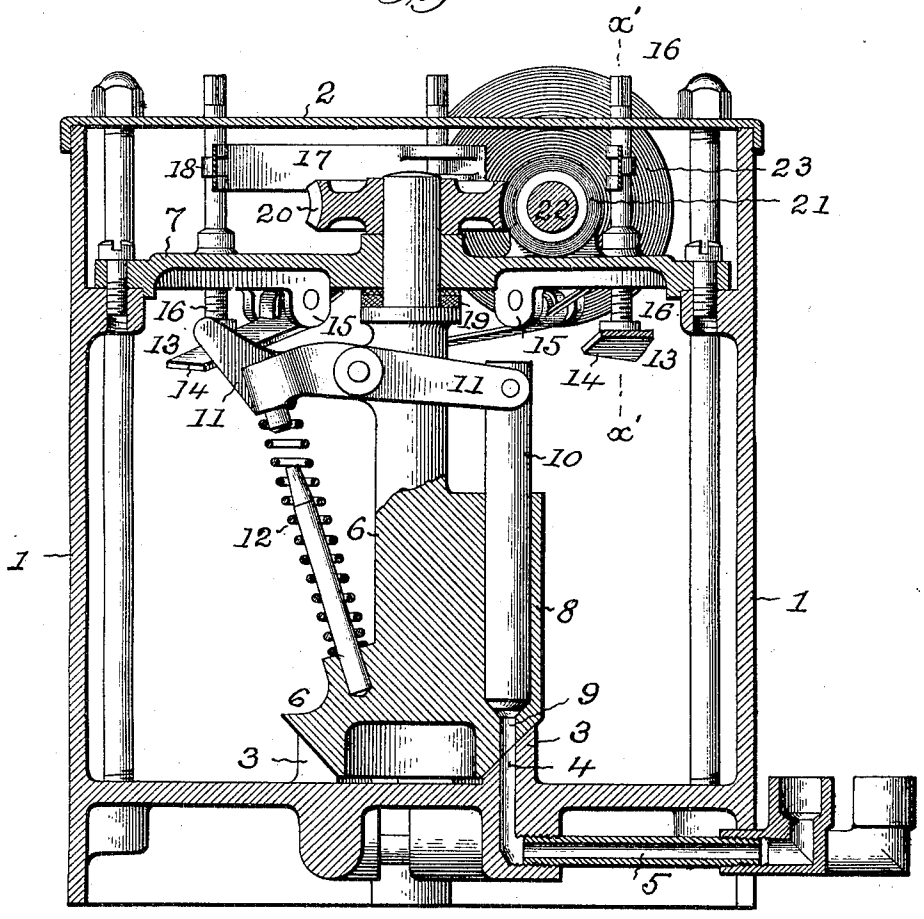

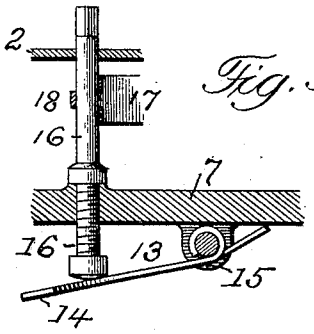

Fig. 5.

Attest:
John Enders.
M. H. Holmes.

Inventor.
Christian C. Hill,
by Robert Burns
Attorney.

No. 812,266. PATENTED FEB. 13, 1906.

C. C. HILL, DEC'D.

C. B. HILL, EXECUTRIX.

PUMPING APPARATUS.

APPLICATION FILED DEC. 23, 1904.

2 SHEETS—SHEET 2.

Fig. 2.

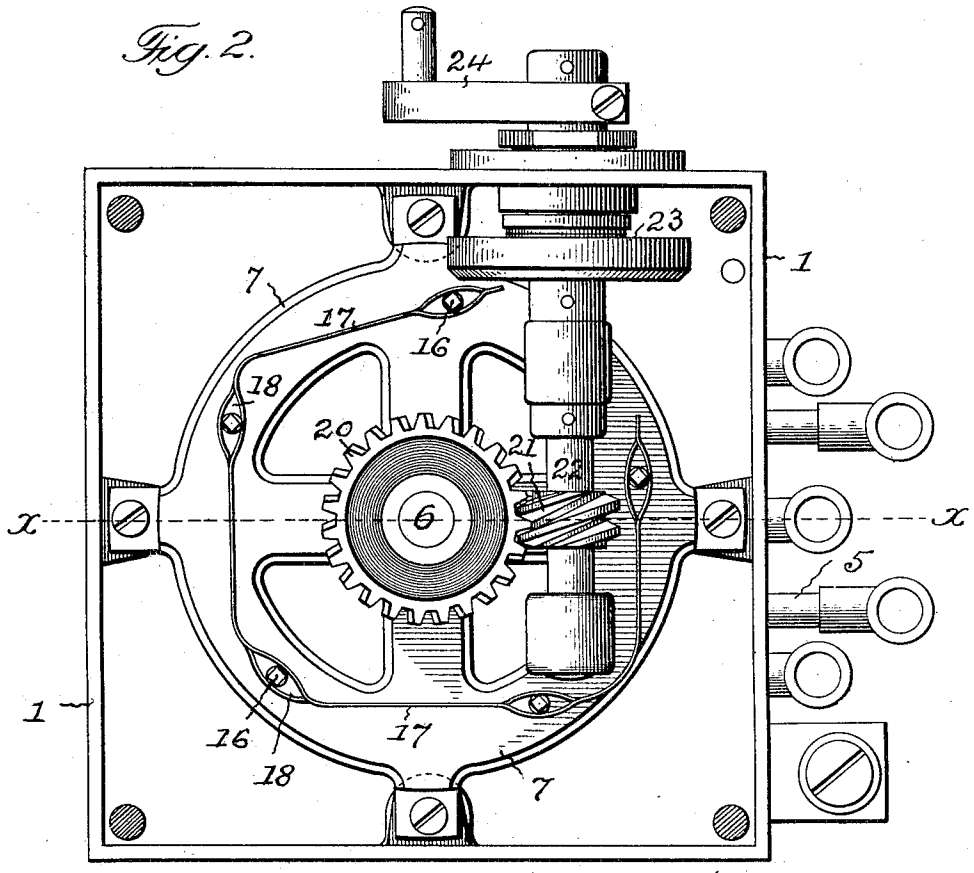

Fig. 3.

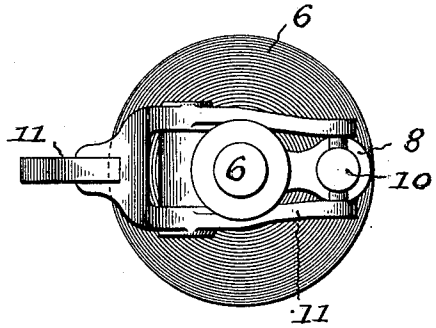

Fig. 4.

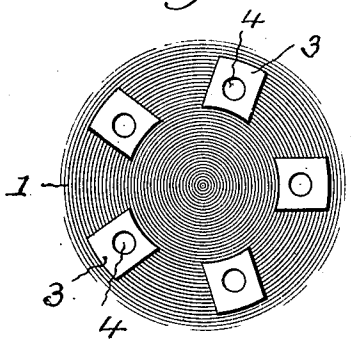

Attest:
John Enders.
M. A. Holmes

Inventor:
Christian C. Hill,
by Robert Burns
Att'y.

UNITED STATES PATENT OFFICE.

CHRISTIAN C. HILL, OF CHICAGO, ILLINOIS; CLOTHILDE B. HILL, EXECUTRIX OF SAID CHRISTIAN C. HILL, DECEASED, ASSIGNOR TO THE STEEL BALL COMPANY, OF CHICAGO, ILLINOIS, A CORPORATION OF WISCONSIN.

PUMPING APPARATUS.

No. 812,266. Specification of Letters Patent. Patented Feb. 13, 1906.

Application filed December 23, 1904. Serial No. 238,046.

To all whom it may concern:

Be it known that I, CHRISTIAN C. HILL, a citizen of the United States of America, and a resident of Chicago, in the county of Cook and State of Illinois, have invented certain new and useful Improvements in Pumping Apparatus, of which the following is a specification.

This invention relates to pumping apparatus of the valveless and multiple discharge type, and has for its object to provide a simple and durable formation and combination of parts involving a single pump cylinder and plunger common to and adapted for serial connection with a cluster of individual outlet-passages and in which succeeding strokes of the pump plunger or piston can be regulated to afford a precise and positive discharge through any particular outlet-passage without interfering with the amount of discharge through the other outlet-passages of the apparatus, all as will hereinafter more fully appear, and be more particularly pointed out in the claims.

In the accompanying drawings, Figure 1 is a vertical sectional elevation at line x x, Fig. 2, of the present pumping apparatus. Fig. 2 is a top view of the same with the cover of the casing removed. Fig. 3 is a top view of the pump mechanism detached. Fig. 4 is a detail plan view of the bottom plate or member of the apparatus, showing the arrangement of the cluster of bearing-lugs and the outlet-passages in the same. Fig. 5 is a detail section at line x' x', Fig. 1, of one of the adjustable cams of the pump mechanism.

Similar numerals of reference indicate like parts in the several views.

Referring to the drawings, 1 is a casing of a rectangular or other form provided with a cap or cover 2 and adapted to contain the supply of lubricant or other fluid to be pumped, as well as the pump mechanism in an immersed position in such fluid.

3 is a circular cluster of lugs having a spaced relation on the bottom plate of said casing and beveled toward each other to form a seat for the lower conical base of the revoluble pump mechanism hereinafter described.

4 represents a series of individual outlet-passages formed in the lugs 3 and adapted for connection with the pipes or tubes 5, which extend to the bearings to be lubricated or to other points where the pumped fluid is to be used.

6 is a revoluble head turning on a vertical axis, its lower end having a conical enlargement adapted for bearing engagement upon the beveled surfaces of the aforesaid cluster of stationary lugs 3, while its upper end is journaled in a spider 7, attached to the casing 1 near the upper end thereof.

8 is a single pump cylinder or piston-chamber forming a part of the revoluble head 6 and arranged to one side of the vertical axis of revolution of said head, so as to move in a horizontal orbit around said axis and in vertical alinement with the series of outlet-passages 4 aforesaid. Said piston-chamber is adapted to connect with said outlet-passages in a serial manner during the operation of the apparatus by a single vertical passage or extension 9 of the lower end of the piston-chamber, as illustrated in Fig. 1.

10 is the single reciprocating pump plunger or piston, having vertical movement in the piston-chamber aforesaid, as well as an orbital movement with said piston-chamber around the vertical axis of the revoluble head aforesaid.

11 is a substantially horizontal operating-lever pivotal midway its length on the head 6, with one arm operatively connected to the upper end of the pump-plunger, while its other arm extends into the path of the hereinafter-described circular series of operating-cams by which the upward strokes of said piston are effected.

12 is a spring bearing at one end upon the head 6 and at the other end beneath the free arm of the operating-lever 11 and adapted to impart a quick and forcible downward stroke to the pump-plunger as said lever leaves its operative engagement with any one of the cams above referred to.

13 represents the series of operating-cams before referred to, and which are adapted to impart a positive upward stroke to the pump-plunger in opposition to the normal downward tendency of the pump-plunger under the influence of the spring 12. Such cams correspond in number to the series of individual outlet-passages 4 of the apparatus and

have a circular arrangement on the under side of the spider 7 and in the circular path of the free arm of the operating-lever 12, and the arrangement of parts is such that an active reciprocation of the pump-plunger is effected by each cam, so that in a complete revolution of the carrying-head 6 the number of strokes of the pump-plunger will equal the number of individual outlet-passages of the apparatus, and consequently each of said passages will receive an individual supply of fluid in one complete revolution of the said carrying-head 6. In the present apparatus the spaced relation of the bearing-lugs 3 leaves a series of gaps between said lugs, so that the inlet-outlet passage 9 of the pump-cylinder in its passage over said gaps will be in direct communication with the fluid contents of the main casing and receive its supply or inlet of said fluid in a direct manner, and the arrangement is such that said passage 9 moves past one of said gaps while the pump-plunger is making its up or suction stroke, and the said passage 9 will be over one of the lugs and in communication with the outlet-passage thereof as the pump-plunger is making its down or discharge stroke. In the present invention said cams are made independently and individually adjustable, so that the length of stroke imparted thereby to the pump-plunger and the consequent amount of fluid discharged in an individual operation can be regulated to suit the particular requirement at a single point of use, and with a view to such adjustability a construction substantially as follows is employed:

14 represents a series of individual cam-plates pivoted between fixed ears 15 on the under side of the spider 7 and normally occupying an inclined position with relation to the horizontal plane of such spider.

16 represents a series of adjusting-screws turning in screw-threaded bearings in the spider 7, with their lower ends having abutment upon the rear ends of the cam-plates 14 to maintain the same at the proper inclination, as well as to effect the adjustment of the same to a greater or less degree of inclination, as required. It is within the province of this part of the present invention to employ other usual and equivalent forms of adjustable cam-plates, as well as to arrange the same and their adjusting means upon any suitable fixed portion of the apparatus, as circumstances or the judgment of the constructor may suggest.

17 is a yoke-piece provided with a series of resilient eyes 18, adapted to embrace the shanks of the adjusting-screws 16 aforesaid and by frictional contact therewith prevent accidental unscrewing of the same in actual use of the apparatus.

19 is a spring interposed between the under side of the spider 7 and a collar on the revoluble member 6 and adapted to yieldingly hold the conical enlargement at the lower end of said head in proper bearing contact with the seat therefor formed by the beveled faces of the cluster of lugs 3, heretofore described.

20 is a worm secured to the upper end of the revoluble head 6 and having operative engagement with an endless worm 21, carried by a horizontal shaft 22, journaled in bearings on the upper side of the spider 7 aforesaid.

23 is a ratchet or other like clutch mechanism by which the oscillation of an arm 24, operatively connected to a moving part of the mechanism to be lubricated or to any other convenient source of motive power, is connected with an intermittent rotation of the worm, worm-wheel, and revoluble head of the present apparatus.

Having thus fully described my said invention, what I claim as new, and desire to secure by Letters Patent, is—

1. A pumping apparatus, comprising a stationary member carrying a circular cluster of bearing-lugs in spaced relation and formed with outlet-passages in their bearing-faces, a revoluble head having bearing at one end on said bearing-lugs, there being a pump-cylinder carried by said head and having an inlet-outlet passage adapted to alternately register with the spaces between said lugs and with the outlet-passages therein, means for revolving said head, a pump-plunger in said cylinder, and means for reciprocating said plunger, substantially as set forth.

2. A pumping apparatus, comprising a stationary member provided with a circular series of outlet-passages, a revoluble head having bearing at one end on said member, there being a pump-cylinder carried by said head and having an inlet-outlet passage adapted to serially register with the series of outlet-passages aforesaid, means for revolving said head, a pump-plunger in said cylinder and means for reciprocating said plunger, the same comprising a circular series of cams equal in number to the series of outlet-passages, means for effecting an individual adjustment of said cams, and an intermediate operative connection between the said cams and the pump-plunger, substantially as set forth.

3. A pumping apparatus, comprising a stationary member provided with a circular series of outlet-passages, a revoluble head having bearing at one end on said member, there being a pump-cylinder carried by said head and having an inlet-outlet passage adapted to serially register with the series of outlet-passages aforesaid, means for revolving said head, a pump-plunger in said cylinder, and means for reciprocating said plun-

ger, the same comprising a circular series of cams equal in number to the series of outlet-passages, a series of individual screws for effecting independent adjustment of said cams, and an intermediate operative connection between said cams and the pump-plunger, substantially as set forth.

4. A pumping apparatus, comprising a stationary member provided with a circular series of outlet-passages, a revoluble head having bearing at one end on said member, there being a pump-cylinder carried by said head and having an inlet-outlet passage adapted to serially register with the series of outlet-passages aforesaid, means for revolving said head, a pump-plunger in said cylinder and means for reciprocating said plunger, the same comprising a circular series of cams equal in number to the series of outlet-passages, a series of individual screws for effecting independent adjustment of said cams, a yoke-piece provided with a series of resilient eyes having frictional engagement with the shanks of said screws, and an intermediate operative connection between said cams and the pump-plunger, substantially as set forth.

5. A pumping apparatus, comprising a stationary member provided with a circular series of outlet-passages, a revoluble head having bearing at one end on said member, a stationary spider forming a bearing for the other end of the head, there being a pump-cylinder carried by said head and having an inlet-outlet passage adapted to serially register with the series of outlet-passages aforesaid, means for revolving said head, a pump-plunger in said cylinder and means for reciprocating said plunger, the same comprising a circular series of cams on said spider equal in number to the series of outlet-passages, means for effecting an individual adjustment of said cams, and an intermediate operative connection between said cams and the pump-plunger, substantially as set forth.

6. A pumping apparatus, comprising a stationary member provided with a circular series of outlet-passages, a revoluble head having bearing at one end on said member, a stationary spider forming a bearing for the other end of the head, there being a pump-cylinder carried by said head and having an inlet-outlet passage adapted to serially register with the series of outlet-passages aforesaid, means for revolving said head, a pump-plunger in said cylinder and means for reciprocating said plunger, the same comprising a circular series of cams on said spider equal in number to the series of outlet-passages, a series of individual screws for effecting individual adjustment of said cams, and an intermediate operative connection between said cams and the pump-plunger, substantially as set forth

7. A pumping apparatus, comprising a stationary member provided with a circular series of outlet-passages, a revoluble head having bearing at one end on said member, a stationary spider forming a bearing for the other end of the head, there being a pump-cylinder carried by said head and having an inlet-outlet passage adapted to serially register with the series of outlet-passages aforesaid, means for revolving said head, a pump-plunger in said cylinder and means for reciprocating said plunger, the same comprising a circular series of cams on said spider equal in number to the series of outlet-passages, a series of individual screws for effecting individual adjustment of said cams, a yoke-piece provided with resilient eyes for frictional engagement with the shanks of said screws, and an intermediate operative connection between said cams and the pump-plunger, substantially as set forth.

8. A pumping apparatus, comprising a stationary member carrying a circular cluster of bearing-lugs in spaced relation and formed with outlet-passages in their bearing-spaces, a revoluble head having bearing at one end on said bearing-lugs, there being a pump-cylinder arranged at one side of the axis of rotation of said head and having an inlet-outlet passage adapted to alternately register with the spaces between said lugs and with the outlet-passages therein, means for revolving said head, a pump-plunger in said cylinder, and means for reciprocating said plunger, substantially as set forth.

9. A pumping apparatus, comprising a stationary member provided with a circular series of outlet-passages, a revoluble head having bearing at one end in said member, there being a pump-cylinder arranged at one side of the axis of rotation of said head and having an inlet-outlet passage adapted to serially register with the outlet-passages aforesaid, means for revolving said head, a pump-plunger in said cylinder, and means for reciprocating said plunger, the same comprising a circular series of cams equal in number to the series of outlet-passages, means for effecting an individual adjustment of said cams, and an intermediate operative connection between said cams and the pump-plunger, substantially as set forth.

10. A pumping apparatus, comprising a stationary member provided with a circular series of outlet-passages, a revoluble head having bearing at one end in said member, there being a pump-cylinder arranged at one side of the axis of rotation of said head and having an inlet-outlet passage adapted to serially register with the outlet-passages aforesaid, means for revolving said head, a pump-plunger in said cylinder, and means for reciprocating said plunger the same comprising a circular series of cams equal in number to the series of outlet-passages, a series of individual screws for effecting independent adjustment

of said cams, and an intermediate operative connection between said cams and the pump-plunger, substantially as set forth.

11. A pumping apparatus, comprising a stationary member provided with a circular series of outlet-passages, a revoluble head having bearing at one end in said member, there being a pump-cylinder arranged at one side of the axis of rotation of said head and having an inlet-outlet passage adapted to serially register with the outlet-passages aforesaid, means for revolving said head, a pump-plunger in said cylinder, and means for reciprocating said plunger the same comprising a circular series equal in number to the series of outlet-passages, a series of individual screws for effecting independent adjustment of said cams, a yoke-piece provided with a series of resilient eyes having frictional engagement with the shanks of said screws, and an intermediate operative connection between said cams and the pump-plunger, substantially as set forth.

12. A pumping apparatus, comprising a stationary member provided with a circular series of outlet-passages, a revoluble head having bearing at one end on said member, a stationary spider forming a bearing for the other end of the head, there being a pump-cylinder arranged at one side of the axis of rotation of said head and having an inlet-outlet passage adapted to serially register with the series of outlet-passages aforesaid, means for revolving said head, a pump-plunger in said cylinder and means for reciprocating said plunger, the same comprising a circular series of cams on said spider equal in number to the series of outlet-passages, means for effecting an individual adjustment of said cams, and an intermediate operative connection between said cams and the pump-plunger, substantially as set forth.

13. A pumping apparatus, comprising a stationary member provided with a circular series of outlet-passages, a revoluble head having bearing at one end on said member, a stationary spider forming a bearing for the other end of the head, there being a pump-cylinder arranged at one side of the axis of rotation of said head and having an inlet-outlet passage adapted to serially register with the series of outlet-passages aforesaid, means for revolving said head, a pump-plunger in said cylinder and means for reciprocating said plunger, the same comprising a circular series of cams on said spider equal in number to the series of outlet-passages, a series of individual screws for effecting independent adjustment of said cams, and an intermediate operative connection between said cams and the pump-plunger, substantially as set forth.

14. A pumping apparatus, comprising a stationary member provided with a circular series of outlet-passages, a revoluble head having bearing at one end on said member, a stationary spider forming a bearing for the other end of the head, there being a pump-cylinder arranged at one side of the axis of rotation of said head and having an inlet-outlet passage adapted to serially register with the series of outlet-passages aforesaid, means for revolving said head, a pump-plunger in said cylinder and means for reciprocating said plunger, the same comprising a circular series of cams on said spider equal in number to the series of outlet-passages, a series of individual screws for effecting independent adjustment of said cams, a yoke-piece provided with resilient eyes for frictional engagement with the shanks of said screws, and an intermediate operative connection between said cams and the pump-plunger, substantially as set forth.

15. A pumping apparatus, comprising a stationary member carrying a circular cluster of bearing-lugs in spaced relation and formed with outlet-passages in their bearing-faces, a revoluble head having bearing at one end on said bearing-lugs, there being a pump-cylinder carried by said head and having an inlet-outlet passage adapted to alternately register with the spaces between said lugs and with the outlet-passages therein, means for revolving said head, a pump-plunger in said cylinder, a spring for moving said plunger in one direction and a cam mechanism for moving said plunger in the other direction, substantially as set forth.

16. A pumping apparatus, comprising a stationary member provided with a circular series of outlet-passages, a revoluble head having bearing at one end on said member, there being a pump-cylinder carried by said head and having an inlet-outlet passage adapted to serially register with the series of outlet-passages aforesaid, means for revolving said head, a pump-plunger in said cylinder, a spring for moving said plunger in one direction and a cam mechanism for moving said plunger in the other direction, the same comprising a circular series of cams equal in number to the series of outlet-passages, means for effecting an individual adjustment of said cams, and an intermediate operative connection between said cams and the pump-plunger, substantially as set forth.

17. A pumping apparatus, comprising a stationary member provided with a circular series of outlet-passages, a revoluble head having bearing at one end on said member, there being a pump-cylinder carried by said head and having an inlet-outlet passage adapted to serially register with the series of outlet-passages aforesaid, means for revolving said head, a pump-plunger in said cylinder, a spring for moving said plunger in one direction and a cam mechanism for moving said plunger in the other direction, the same

comprising a circular series of cams equal in number to the series of outlet-passages, a series of individual screws for effecting independent adjustment of said cams, and an intermediate operative connection between said cams and the pump-plunger, substantially as set forth.

18. A pumping apparatus comprising a stationary member provided with a circular series of outlet-passages, a revoluble head having bearing at one end on said member, a stationary spider forming a bearing for the other end of the head, there being a pump-cylinder carried by said head and having an inlet-outlet passage adapted to serially register with the series of outlet-passages aforesaid, means for revolving said head, a pump-plunger in said cylinder, a spring for moving said plunger in one direction, and a cam mechanism for moving said plunger in the other direction, the same comprising a circular series of cams equal in number to the series of outlet-passages, means for effecting an individual adjustment of said cams, and an intermediate operative connection between said cams and the pump-plunger, substantially as set forth.

19. A pumping apparatus, comprising a stationary member provided with a circular series of outlet-passages, a revoluble head having bearing at one end on said member, a stationary spider forming a bearing for the other end of the head, there being a pump-cylinder carried by said head and having an inlet-outlet passage adapted to serially register with the series of outlet-passages aforesaid, means for revolving said head, a pump-plunger in said cylinder, a spring for moving said plunger in one direction, and a cam mechanism for moving said plunger in the other direction, the same comprising a circular series of cams equal in number to the series of outlet-passages, a series of individual screws for effecting said independent adjustment of said cams, and an intermediate operative connection between said cams and the pump-plunger, substantially as set forth.

20. A pumping apparatus, comprising a stationary member provided with a circular series of outlet-passages, a revoluble head having bearing at one end in said member, there being a pump-cylinder arranged at one side of the axis of rotation of said head and having an inlet-outlet passage adapted to serially register with the outlet-passages aforesaid, means for revolving said head, a spring for moving said plunger in one direction, and a cam mechanism for moving said plunger in the other direction, the same comprising a circular series of cams equal in number to the series of outlet-passages, means for effecting an individual adjustment of said cams, and an intermediate operative connection between said cams and the pump-plunger, substantially as set forth.

21. A pumping apparatus, comprising a stationary member provided with a circular series of outlet-passages, a revoluble head having bearing at one end in said member, there being a pump-cylinder arranged at one side of the axis of rotation of said head and having an inlet-outlet passage adapted to serially register with the outlet-passages aforesaid, means for revolving said head, a spring for moving said plunger in one direction, and a cam mechanism for moving said plunger in the other direction, the same comprising a circular series of cams equal in number to the series of outlet-passages, a series of individual screws for effecting independent adjustment of said cams, and an intermediate operative connection between said cams and the pump-plunger, substantially as set forth.

22. A pumping apparatus, comprising a stationary member provided with a circular series of outlet-passages, a revoluble head having bearing at one end on said member, a stationary spider forming a bearing for the other end of the head, there being a pump-cylinder arranged at one side of the axis of rotation of said head and having an inlet-outlet passage adapted to serially register with the series of outlet-passages aforesaid, means for revolving said head, a pump-plunger in said cylinder, a spring for moving said plunger in one direction, and a cam mechanism for moving said plunger in the other direction, the same comprising a circular series of cams on said spider equal in number to the series of outlet-passages, means for effecting an individual adjustment of said cams, and an intermediate operative connection between said cams and the pump-plunger, substantially as set forth.

23. A pumping apparatus, comprising a stationary member provided with a circular series of outlet-passages, a revoluble head having bearing at one end on said member, a stationary spider forming a bearing for the other end of the head, there being a pump-cylinder arranged at one side of the axis of rotation of said head and having an inlet-outlet passage adapted to serially register with the series of outlet-passages aforesaid, means for revolving said head, a pump-plunger in said cylinder, a spring for moving said plunger in one direction, and a cam mechanism for moving said plunger in the other direction, the same comprising a circular series of cams on said spider equal in number to the series of outlet-passages, a series of individual screws for effecting independent adjustment of said cams, and an intermediate operative connection between said cams and the pump-plunger, substantially as set forth.

24. A pumping apparatus, comprising a stationary member provided with a circular series of outlet-passages, a revoluble head having bearing at one end on said member, a

stationary spider forming a bearing for the other end of the head, there being a pump-cylinder carried by said head and having an inlet-outlet passage adapted to serially register with the series of outlet-passages aforesaid, means for revolving said head, a pump-plunger in said cylinder and means for reciprocating said plunger, and a spring arranged between said spider and a collar on the revoluble head and adapted to hold said head to its bearing on the stationary member, substantially as set forth.

Signed at Chicago, Illinois, this 14th day of December, 1904.

CHRISTIAN C. HILL.

Witnesses:
ROBERT BURNS,
M. H. HOLMES.