Office de la Propriété Intellectuelle du Canada
Un organisme d'Industrie Canada

Canadian Intellectual Property Office
An agency of Industry Canada

CA 2185180 C 2002/08/20

(11)(21) 2 185 180

(12) BREVET CANADIEN
CANADIAN PATENT

(13) C

(22) Date de dépôt/Filing Date: 1996/09/10

(41) Mise à la disp. pub./Open to Public Insp.: 1997/06/29

(45) Date de délivrance/Issue Date: 2002/08/20

(30) Priorité/Priority: 1995/12/28 (HEI 7(1995)-353045) JP

(51) Cl.Int.^{6}/Int.Cl.^{6} H01H 9/54

(72) Inventeurs/Inventors:
Ishizuka, Kenichi, JP;
Furukawa, Osamu, JP

(73) Propriétaire/Owner:
NILES PARTS CO., LTD., JP

(74) Agent: SIM & MCBURNEY

(54) Titre : INTERRUPTEUR A COMPOSANTS ELECTRONIQUES INTERNES
(54) Title: SWITCH ASSEMBLY WITH INTERNAL ELECTRONIC COMPONENTS

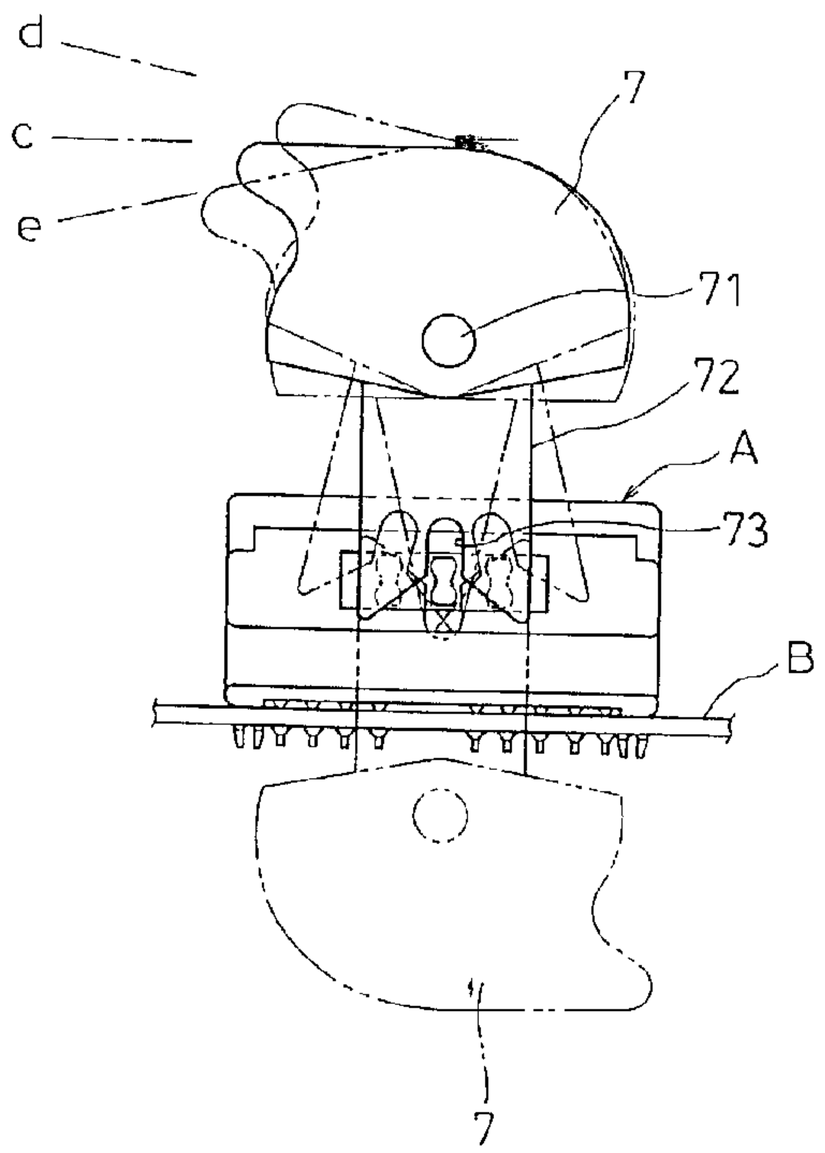

(57) Abrégé/Abstract:
The present invention provides a switch assembly with internal electronic components which enables easy assembly and is dustproof, and which is oriented relative to the main board of a power window control switch or other devices with a lesser degree of limitation and has a wide variety of applications. A plurality of electronic components are mounted to one side of a plate. A plurality of switch electrodes are formed in the other side of the plate. A switch case is resiliently fit over the base plate. The switch case includes an elongated aperture within which a lever of a switch operating mechanism is loosely fit, pawls adapted for resilient engagement with the base plate, projections and a base. The switch operating mechanism holds a movable contact. The switch case defines a space adjacent to the switch operating mechanism and the movable contact. The switch electrodes are sealably contained within the space when the switch case is resiliently fit over the base plate. The lever includes a plurality of combined projections and recesses arranged in a direction transverse to the direction in which the switch operating mechanism is moved.

ABSTRACT OF THE DISCLOSURE

The present invention provides a switch assembly with internal electronic components which enables easy assembly and is dustproof, and which is oriented relative to the main board of a power window control switch or other devices with a lesser degree of limitation and has a wide variety of applications.

A plurality of electronic components are mounted to one side of a plate. A plurality of switch electrodes are formed in the other side of the plate. A switch case is resiliently fit over the base plate. The switch case includes an elongated aperture within which a lever of a switch operating mechanism is loosely fit, pawls adapted for resilient engagement with the base plate, projections and a base. The switch operating mechanism holds a movable contact. The switch case defines a space adjacent to the switch operating mechanism and the movable contact. The switch electrodes are sealably contained within the space when the switch case is resiliently fit over the base plate. The lever includes a plurality of combined projections and recesses arranged in a direction transverse to the direction in which the switch operating mechanism is moved.

SPECIFICATION

SWITCH ASSEMBLY WITH INTERNAL ELECTRONIC COMPONENTS

BACKGROUND OF THE INVENTION

Field of the Invention

The present invention relates to an improved switch assembly within which various electronic components are contained and more particularly, to an improvement in such a switch assembly which is mounted to arm rests or other vehicle parts surrounded by dust, and which is suitable for use, for example, as a power window control switch.

Description of the Prior Art

A conventional switch assembly of this type is disclosed, for example, in Japanese laid-open utility model publication No. Hei 5-92926. The prior art switch assembly includes a base plate, a circuit formed in a predetermined pattern in one side of the base plate, and a jumper wire or switch electrode and electronic components mounted to the other side of the base plate.

However, the switch electrode is exposed to ambient atmosphere and is subject to contact failure due to dust or foreign matter. Thus, the prior art switch assembly can not

be used in a place which is subjected to dust.

The switch assembly of this invention is typically mounted to the main board of a power window switch control or other devices. In such a case, there is a limit on the orientation of the switch assembly relative to the main board.

To overcome these problems, it is an object of the present invention to provide a switch assembly with internal electronic components, which enables easy assembly and is dustproof, and which can freely be oriented relative to the main board of a power window control switch.

SUMMARY OF THE INVENTION

According to an aspect of the present invention, there is provided a switch assembly of a power window switch, the switch assembly having internal electronic components, comprising:

a base plate;

electronic components mounted to one side of the base plate;

switch electrodes formed in the other side of the base plate; and

a switch case including a switch operating mechanism and a movable contact, means for resiliently fitting the base plate to said switch case to seal the switch electrodes, said means for resiliently fitting comprising a plurality of pawls on said switch case;

said switch operating mechanism including a lever, said lever extending out of the switch case and including a plurality of combined projections and recesses arranged in a direction transverse to the direction in which the switch operating mechanism is moved.

The invention, as defined in claim 2, provides a switch assembly with internal electronic components, wherein the base plate is a hybrid integrated circuit board.

The invention, as defined in claim 3, provides a switch assembly with internal electronic components, wherein the electronic components mounted to the base plate collectively form a vehicle power window control circuit.

The invention, as defined in claim 4, provides a switch assembly with internal electronic components, wherein the base plate includes a plurality of lead terminals adapted to provide an electrical connection between the electronic components mounted to the base plate and the main board of a power window control switch.

DETAILED DESCRIPTION OF THE INVENTION

The present invention will now be described, by way of example, with reference to the accompanying drawings.

In the drawing, 1 denotes a base plate. 2 denotes electronic components. 3 denotes switch electrodes. 4 denotes a switch operating mechanism. 5 denotes a movable contact. 6 denotes a switch case. Reference will next be made to these components.

First, the base plate 1 is made of epoxy resin with glass fiber, ceramic or other materials. An electrically conductive line is formed in a predetermined pattern in one

side 11 of the base plate 1. The electronic components 2 are mounted to the electrically conductive line. The switch electrodes 3 are formed in the other side 12 of the base plate 1. A plurality of lead terminals 13 are soldered to the lower end of the base plate 1. The lead terminals 13 provide an electrical connection between the electronic components 2 and a main board B of a power window control switch. The lead terminals 13 are made by a lead frame which is typically use in a hybrid integrated circuit board.

Next, the switch case 6 includes an elongated aperture 61, pawls 62 adapted to resiliently engage the base plate 1, projections 63 adapted to secure a switch assembly A to the main board B of the power window control switch, and a base 64. The switch operating mechanism 4 holds the movable contact 5 and includes a lever 41 loosely fit within the elongated aperture 61. The switch case 6 defines a space 65 adjacent to the switch operating mechanism 4 and the movable contact 5. The switch electrodes 3 are sealably contained within this space 65 when the switch 6 is resiliently fit over the base plate 1. That is, the switch electrodes 3 are dustproof. To improve the seal integrity, a sheet (not shown), made from resinous film or unwoven fabric, may be disposed between the switch case 6 and the switch operating mechanism 4.

The lever 41 extends out of the switch case 6 and

includes a plurality of combined projections and recesses 41a to 41f arranged in a direction transverse to the direction in which the switch operating mechanism 4 is moved. Thus. the lever 41 has a generally gourd-shaped section as shown in Fig. 1. The power window control switch includes a control knob 7. The control knob 7 has a drive mechanism 72 which includes a groove 73 engaged with the combined projections and recesses 41a to 41f to transmit force from the control knob 7 to the lever 41.

The shape of the lever 41 facilitates engagement of the groove 73 of the drive mechanism 72 with the combined projections and recesses 41a to 41f regardless of whether the switch assembly A is mounted to the control knob 7 or the main board as shown in Fig. 3. In other words, the switch assembly A is mounted to the main board B with a lesser degree of limitation on its orientation.

Reference will now be made to the operation of the switch assembly according to the present invention.

If a vehicle occupant moves the control knob 7 of the power window control switch from a neutral position c, as shown in Fig. 3, to a closed position d so as to close a glass window, a force is transmitted from the control knob 7 to the lever 41. This force then causes the lever 41 to move from a neutral position, as shown by solid line C in Fig. 1, to an automatic UP operating position, as shown by broken

line D, or a manual UP operating position between the neutral position and the automatic UP operating position. At this time, the switch operating mechanism 4 and the movable contact 5 are moved with the lever 41. The movable contact 5 is then electrically connected to an automatic electrode 31 or a manual electrode 32 of the switch electrodes 3.

When the movable contact 5 is connected to the automatic electrode 31 or the manual electrode 32, an electric pulse signal is sent to the electronic components 2. In the event that the movable contact 5 is connected, for example, to the automatic electrode 31, a pulse signal to that effect is sent to the electronic components 2 whereby the glass window is continuously moved to its fully closed position even if the vehicle occupant stops operating the control knob 7. In the event that the movable contact 5 is connected only to the manual electrode 32, the electronic components 2 receive a pulse signal to that effect and are operable to close the glass window only when the occupant operates the control knob 7.

When the vehicle occupant moves the control knob 7 of the power window control switch from the neutral position c as shown in Fig. 3 to an open position e so as to open the glass window, a force is transmitted from the control knob 7 to the lever 41. This force causes the lever 41 to move from the neutral position, as shown by solid line C in Fig. 1, to

an automatic DOWN operating position, as shown by broken line E, or a manual DOWN operating position between the neutral position and the automatic DOWN operating position. At this time, the switch operating mechanism 4 and the movable contact 5 are moved with the lever 41. The movable contact 5 is then electrically connected to an automatic electrode 33 or a manual electrode 34 of the switch electrodes 3.

When the movable contact 5 is connected to the automatic electrode 33 or the manual electrode 34, an electric pulse signal is sent to the electronic components 2. In the event that the movable contact 5 is connected, for example, to the automatic electrode 33, a pulse signal to that effect is sent to the electronic components 2 whereby the glass window is continuously moved to its fully open position even if the occupant stops operating the control knob 7. In the event that the movable contact 5 is connected to the manual electrode 34, the electronic components 2 receive a pulse signal to that effect and are operable to open the glass window only when the occupant operates the control knob 7.

Advantages of the Invention are as follows.

(1) The invention provides a switch assembly with internal electronic components which comprises a base plate, electronic components mounted to one side of the base plate, switch electrodes formed in the other side of the base plate,

and a switch case including a switch operating mechanism and a movable contact and resiliently fit over the base plate to seal the switch electrodes, wherein the switch operating mechanism includes a lever extending out of the switch case and including a plurality of combined projections and recesses arranged in a direction transverse to the direction in which the switch operating mechanism is moved. This arrangement prevents the switch assembly from being subject to contact failure due to dust or other foreign matter, allows the switch assembly to be mounted to a region which is subjected to dust, enables easy assembly, effectively protects the switch assembly from dust, allows the switch assembly to be oriented relative to the main board of a power window control switch or other devices with a lesser degree of limitation.

(2) According to the present invention, the base plate is a hybrid integrated circuit board. The switch case includes a switch operating mechanism and a movable contact and is resiliently fit over the existing hybrid integrated circuit to constitute a switch assembly within which various electronic components are contained.

(3) Also, according to the present invention, the switch assembly contains electronic components for use with a vehicle power window control circuit. Thus, the power window control switch is dustproof, is compact and has a

lesser number of parts.

(4) According to the present invention, the lead terminals are used to provide an electrical connection between the electronic components and the main board of the power window control switch. The lead terminals can be made of a lead frame typically for use with a hybrid integrated circuit board.

BRIEF DESCRIPTION OF THE DRAWINGS

Fig. 1 is a front view, partly broken away, of a switch assembly according to one embodiment of the present invention;

Fig. 2 is a sectional view taken on the line F-F of Fig. 1; and

Fig. 3 illustrates a control knob attached to the switch assembly shown in Fig. 1.

1 base plate

2 electronic components

3 switch electrodes

5 movable contact

6 switch case

7 control knob

A switch assembly

B main board

CLAIMS

1. A switch assembly of a power window switch, the switch assembly having internal electronic components, comprising:

a base plate;

electronic components mounted to one side of the base plate;

switch electrodes formed in the other side of the base plate; and

a switch case including a switch operating mechanism and a movable contact, means for resiliently fitting the base plate to said switch case to seal the switch electrodes, said means for resiliently fitting comprising a plurality of pawls on said switch case;

said switch operating mechanism including a lever, said lever extending out of the switch case and including a plurality of combined projections and recesses arranged in a direction transverse to the direction in which the switch operating mechanism is moved.

2. A switch assembly with internal electronic components as set forth in claim 1, wherein said base plate is a hybrid integrated circuit board.

3. A switch assembly with internal electronic components as set forth in claims 1 or 2, wherein said electronic components mounted to the base plate collectively form a vehicle power window control circuit.

4. A switch assembly with internal electronic components as set forth in any one of claims 1 to 3, wherein said base plate includes a plurality of lead terminals adapted to provide an electrical connection between the electronic components mounted to the base plate and a main board of a power window control switch.

2185180

FIG. 1

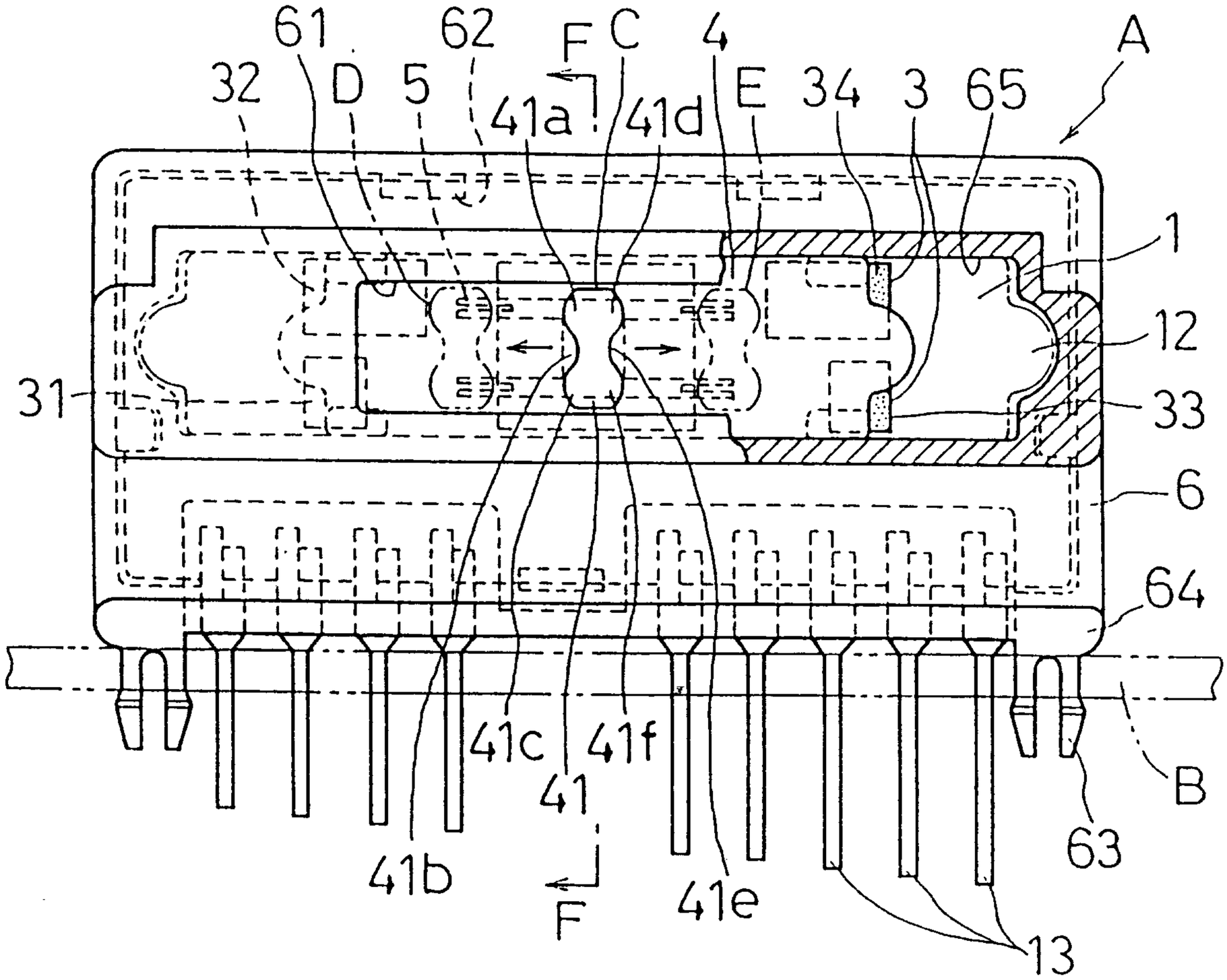

FIG. 2

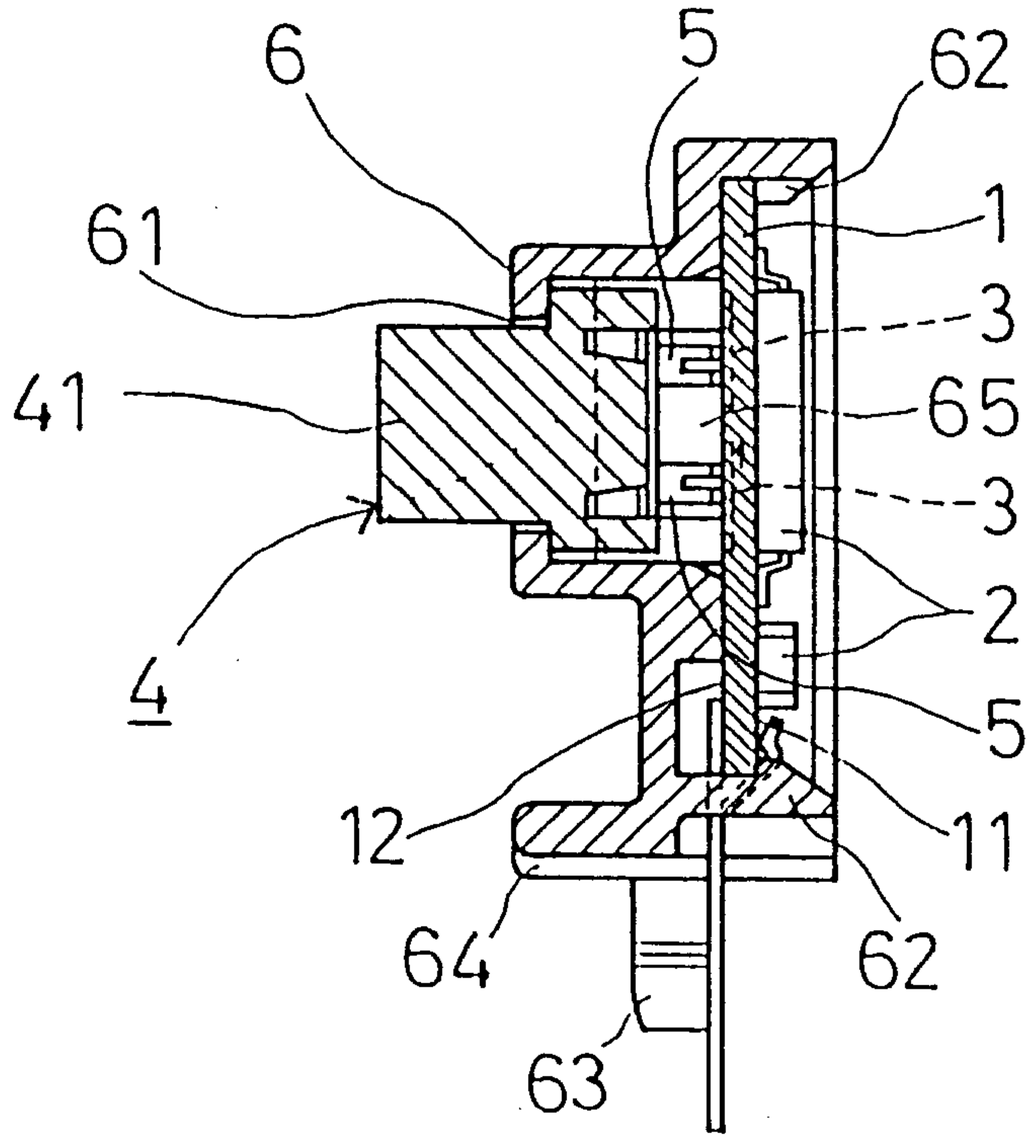

FIG. 3

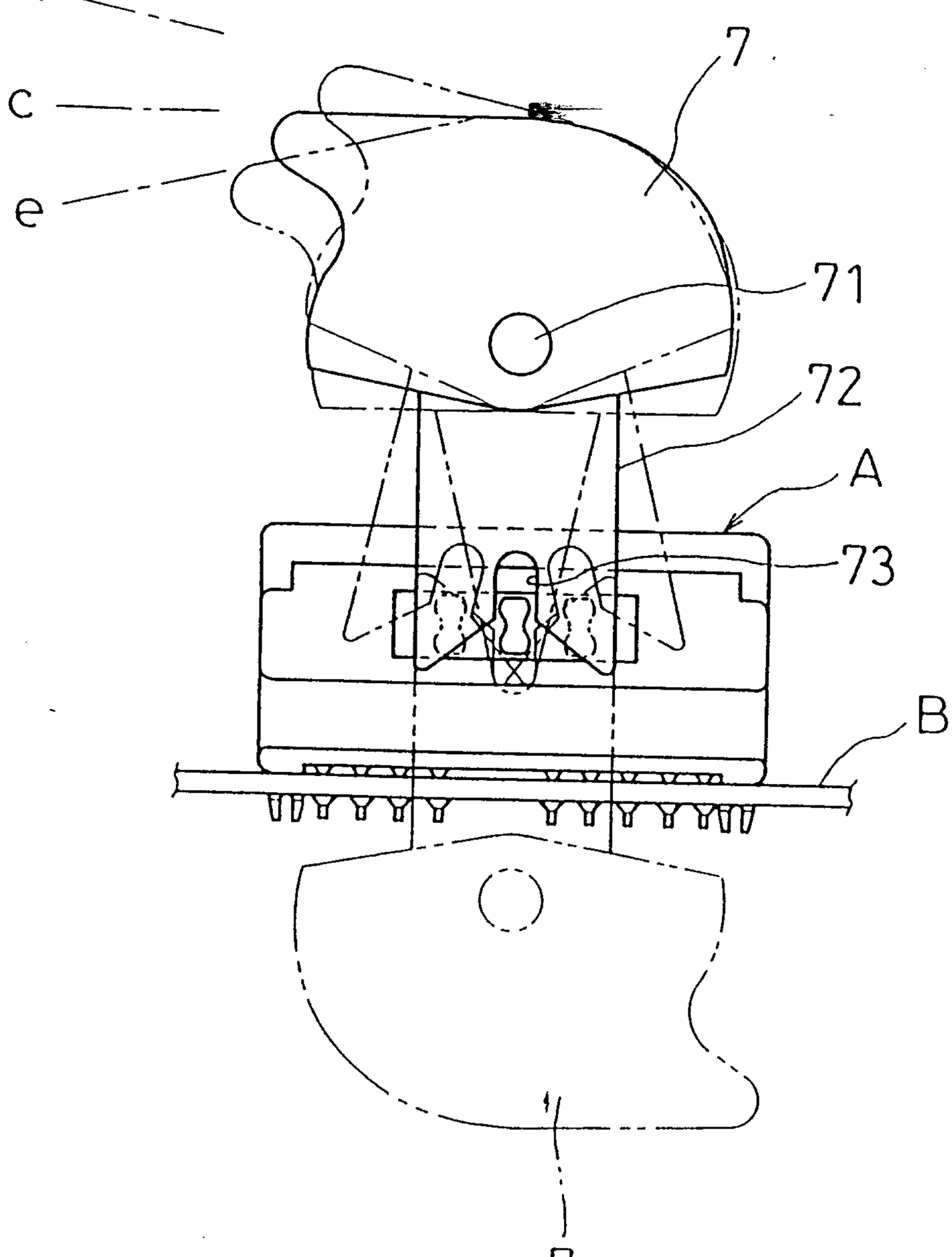

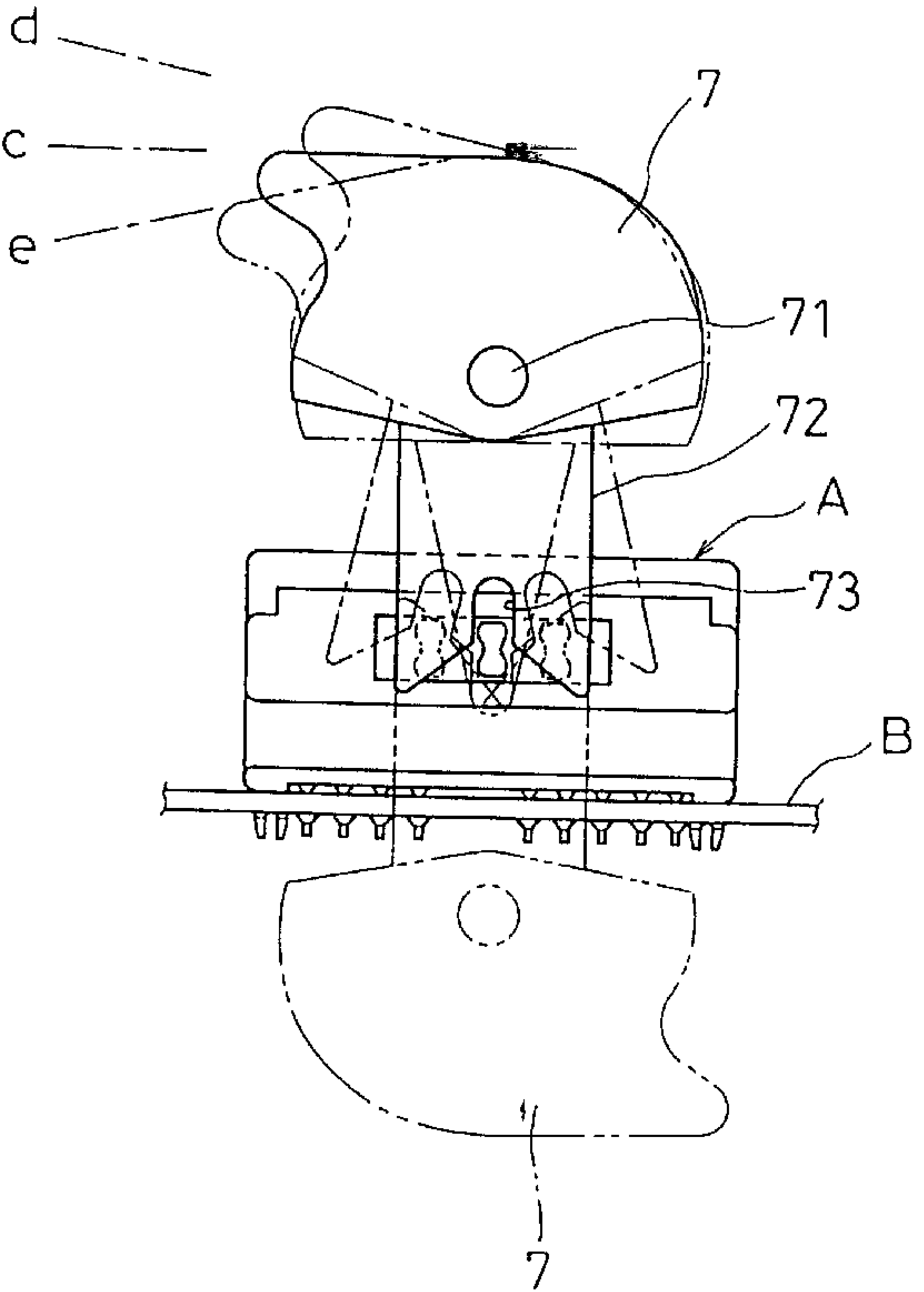
d
c
e
7
71
72
A
73
B
7