Feb. 19, 1935. C. L. ARMSTRONG 1,992,139

AIR COMPRESSOR

Filed Nov. 14, 1933

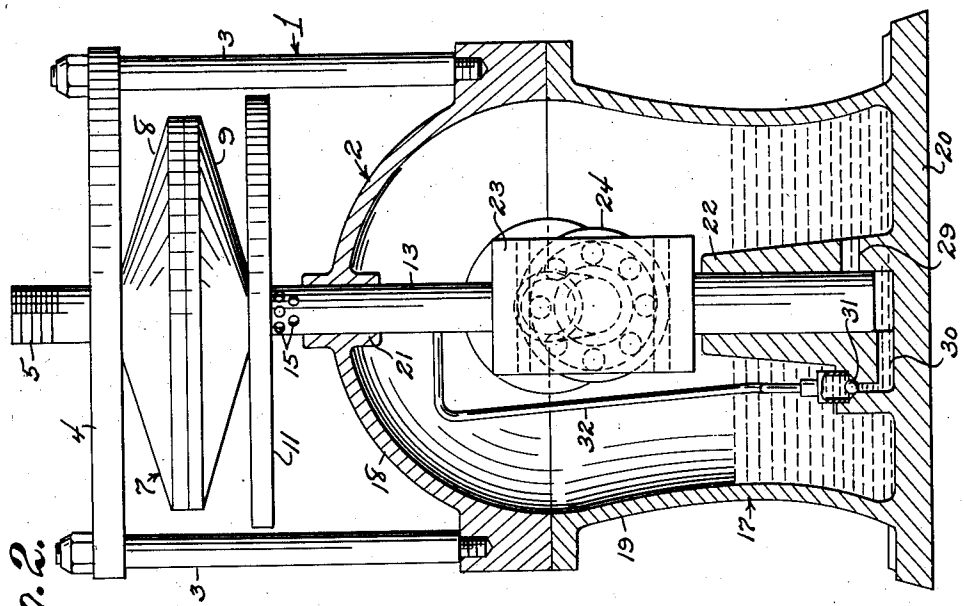

Fig. 2.

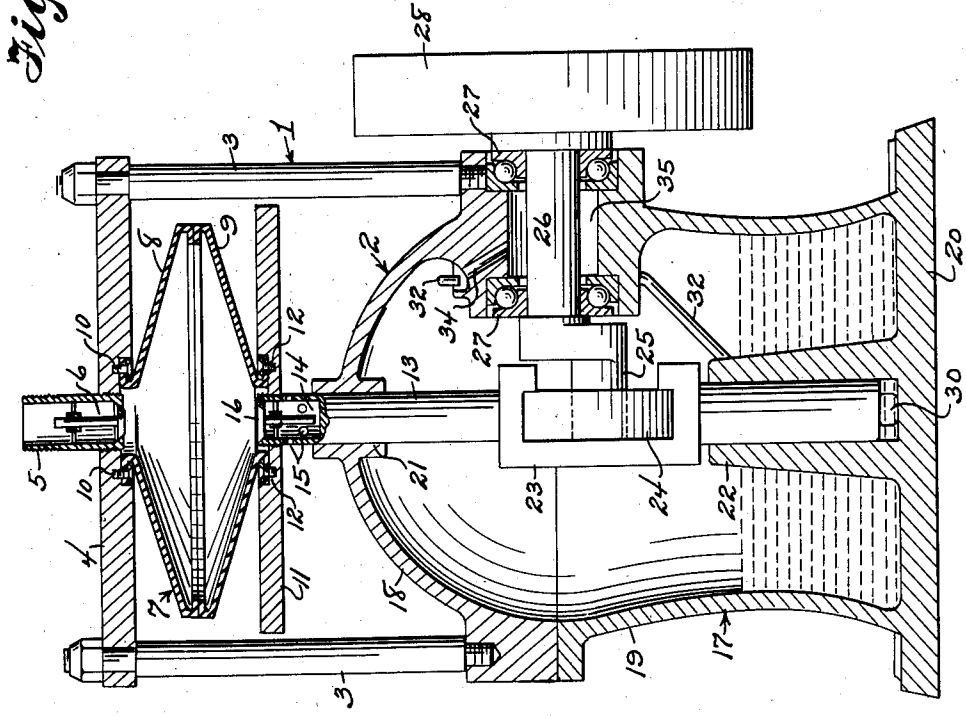

Fig. 1.

Cloyd L. Armstrong
INVENTOR

BY Victor J. Evans and Co. ATTORNEY

Patented Feb. 19, 1935 1,992,139

UNITED STATES PATENT OFFICE

1,992,139

AIR COMPRESSOR

Cloyd L. Armstrong, Lima, Ohio

Application November 14, 1933, Serial No. 697,994

1 Claim. (Cl. 230—170)

This invention relates to compressors adapted for developing low and medium pressures and has for the primary object the provision of a device of the above stated character which will supply clean air free of lubricant or lubricant vapor and consists of a minimum number of parts which are self-lubricated during the operation of the device.

With these and other objects in view this invention consists in certain novel features of construction, combination and arrangement of parts to be hereinafter more fully described and claimed.

For a complete understanding of my invention, reference is to be had to the following description and accompanying drawing, in which

Figure 1 is a vertical sectional view illustrating a compressor constructed in accordance with my invention.

Figure 2 is a side elevation partly in section illustrating the same.

My invention consists of a compressor unit 1 and an operating medium 2 therefor which also provides a support for the compressor unit and the latter consists of vertically arranged supporting elements 3 having secured to their upper ends a compressor plate 4 provided with an outlet pipe 5 having a check valve 6 therein. The outlet pipe 5 is threaded in an opening formed in the compressor plate 4 and communicative with the opening is a diaphragm or bellows 7 consisting of sections 8 and 9 suitably sealed together and the section 8 is secured to the compressor plate 4 by fasteners 10 while the section 9 is secured to a movable compressor plate 11 by fasteners 12. The plate 11 is provided with a threaded opening to receive the threaded end of a combined operating medium and air intake 13. The medium 13 is in the form of a shaft mounted for vertical movement and the upper end is of hollow formation to form a chamber 14 in communication with the atmosphere by ports 15. Mounted in the chamber 14 is a check valve 16. The medium 13 is adapted for vertical reciprocation which movement extends and collapses the diaphragm or bellows 7 for the purpose of drawing air therein and expelling the trapped air through the outlet pipe 5. It is to be understood that the outlet pipe 5 is to be connected to a storage tank or like device.

The unit 2 consists of a casing 17 of separable sections 18 and 19 suitably secured together and the lower section 19 forms a crank case to receive lubricant with the lower end thereof terminating in a base 20. The upper section 18 is dome-shaped and is provided with a bearing 21 slidably receiving the shaft 13 while the lower end of the shaft is slidably mounted in a cylinder 22 formed integrally with the base 20 and arranged in vertical alignment with the bearing 21. The intermediate portion of the shaft 13 is in the form of a bearing frame 23 in which is mounted an anti-friction bearing 24 mounted to the crank 25 of a crank shaft 26. The crank shaft 26 is arranged horizontally or at right angles to the shaft 13 and is supported by anti-friction bearings 27 mounted in the casing 17. The outer end of the crank shaft is provided with a pulley 28 over which may be trained a belt of a power source.

The lower end of the shaft 13 provides a piston for the cylinder 22 and the latter is in communication with the interior of the casing 17 by an intake port 29 so that the lubricant may be drawn into the cylinder by the reciprocation of the shaft 13 and expelled from the cylinder by an outlet passage 30 equipped with a check valve 31 to which a pipe 32 is connected. The pipe 32 extends upwardly with its upper end disposed over a passage 34 which leads to a chamber 35. The chamber 35 is formed in the casing 17 for the purpose of receiving the anti-friction bearings 27 and crank shaft 26 so that the lubricant supplied by the pipe 32 will thoroughly lubricate the anti-friction bearings, the crank shaft and pass from the chamber 35 about the crank shaft so as to lubricate the crank thereof and the anti-friction bearing 24.

From the foregoing description, taken in connection with the accompanying drawing, it will be seen that a very efficient operating medium is provided for the compressor unit which will support the latter and is self-lubricating during its operation. Further, it is to be noted that the compressor unit will take in and exhaust clean air free of any oil vapors and only require a minimum amount of power for its operation.

While I have shown and described the preferred embodiment of my invention, it will be understood that minor changes in construction, combination and arrangement of parts may be made without departing from the spirit and scope of my invention, as claimed.

Having described the invention, I claim:

An air compressor comprising a housing, a shaft supported by said housing for vertical reciprocation, supporting elements carried by the housing, a compressor plate secured to said elements, an outlet pipe carried by said plate, a check valve for the outlet pipe, a diaphragm con-

nected to the plate and in communication with the outlet pipe, a movable compressor plate secured to the diaphragm, said shaft having its upper end of hollow formation and secured to the movable compressor plate and in communication with the interior of the diaphragm and provided with ports communicating the hollow portion of the shaft to the atmosphere, a check valve in the hollow portion of the shaft between the ports and the diaphragm, and means carried by the housing for imparting movement to the shaft.

CLOYD L. ARMSTRONG.