(19) Europäisches Patentamt
European Patent Office
Office européen des brevets

(11) EP 0 783 090 B1

(12) **EUROPEAN PATENT SPECIFICATION**

(45) Date of publication and mention of the grant of the patent:
02.02.2000 Bulletin 2000/05

(51) Int Cl.[7]: **F24B 1/188**, F24B 1/183

(21) Application number: **96119347.1**

(22) Date of filing: **23.03.1994**

(54) **Fume-exhausting apparatus, in particular for chimneys and fireplaces**

Rauchabzugsgerät, insbesondere für Schornsteine und Kamine

Dispositif pour évacuer des fumées, en particulier dans les cheminées et dans les cheminées d'appartement

(84) Designated Contracting States:
AT BE CH DE DK FR GB IE LI LU NL SE

(30) Priority: **31.03.1993 IT MI930638**
31.03.1993 IT MI930639

(43) Date of publication of application:
09.07.1997 Bulletin 1997/28

(62) Document number(s) of the earlier application(s) in accordance with Art. 76 EPC:
94830137.9 / 0 620 405

(73) Proprietors:
- **Della Rocca, Gianluca**
I-11028 Valtournenche-Breuil-Cervinia (Aosta) (IT)
- **Della Rocca, Gianfranco**
I-11028 Valtournenche-Breuil-Cervinia (Aosta) (IT)

(72) Inventors:
- **Della Rocca, Gianluca**
I-11028 Valtournenche-Breuil-Cervinia (Aosta) (IT)
- **Della Rocca, Gianfranco**
I-11028 Valtournenche-Breuil-Cervinia (Aosta) (IT)

(74) Representative: **Righetti, Giuseppe**
Bugnion S.p.A.
Viale Lancetti, 17
20158 Milano (IT)

(56) References cited:
FR-A- 2 294 403
FR-A- 2 467 358
FR-A- 2 470 928
US-A- 4 100 913

Note: Within nine months from the publication of the mention of the grant of the European patent, any person may give notice to the European Patent Office of opposition to the European patent granted. Notice of opposition shall be filed in a written reasoned statement. It shall not be deemed to have been filed until the opposition fee has been paid. (Art. 99(1) European Patent Convention).

EP 0 783 090 B1

Printed by Jouve, 75001 PARIS (FR)

Description

[0001] The present invention relates to a fume-exhausting apparatus, in particular for chimneys and fireplaces, having the features recited in the preamble of claim 1.

[0002] It is known that chimneys, fireplaces and similar structures do not always have a satisfactory and appropriate draught, that is a capacity of appropriately conveying and drawing fumes into a flue. In fact, sometimes fume vortices and refluxes towards the room where a fireplace is located may be created, due either to the presence of excess smoke in the hearth, for example when some foods are being barbecued, or to an imperfect design and construction of the fireplaces themselves.

[0003] Under the foregoing and other similar situations, for example when particular weather conditions are present or, above all, at the initial ignition step, when the operating temperatures of the flue do not correspond to those provided for a steady state operation, fumes do not succeed in overcoming the upper hood restriction at the point where said hood is connected to the flue and therefore tend to invade the inner environment or room in which the chimney or fireplace is located.

[0004] The document FR-A- 2 467 358 teaches to provide, in a chimney comprising a hearth and a hood for collecting fumes to be sent to a flue, a number of channels having lower openings directed downwardly close to the lower inlet mouth of the hood and upper openings directed upwardly and communicating with the lower end of the flue. An air stream is drived around the conveying channel and blown into the room, in such a manner to provide a heat recovering from the fumes.

[0005] Document FR-A-2 470 928, which is herein referred as the most relevant state of the art, shows an apparatus comprising a lot of channels having lower openings directed downwardly close to the lower inlet mouth of the hood and upper openings directed upwardly and communicating with the lower end of the flue. A waterflow is driven around the conveying channel to recovery heat from the smokes. A free space is provided between the bundle of conveying channels and the front side of the hood, to provide a smoke flow directed towards the flue.

[0006] US Patent n. 4,100,913 teaches to provide conveying channels extending from the upper portion of the hood and entering the lower end of the flue. Also in this document the conveying channels are arranged for providing a heat recevering by an air stream passing around the channels itselves.

[0007] Also US Patent n. 2,277,381 teaches to provide conveying channels extending from the upper portion of the hood and arranged for providing a heat recevering from the fumes, by an air stream blow around the channels itselves.

[0008] Under this situation the technical task underlying the present invention is to provide a fume-exhausting apparatus, in particular for chimneys and fireplaces, capable of substantially eliminating the above drawbacks.

[0009] Within the scope of this technical task it is an important object of the present invention to devise a fume-exhausting apparatus capable of enabling the natural draught of a chimney or fireplace to be increased to an important amount without resorting to the use of fans or similar power-driven exhausting devices, so that under any circumstances all smoke emissions into the room where the chimney or fireplace is located can be avoided.

[0010] The technical task mentioned and the object specified are substantially achieved by a fume-exhausting apparatus, in particular for chimneys and fireplaces, which is characterized in that it comprises the features recited in the characterizing portion of claim 1.

[0011] The description of some preferred embodiments of a fume-exhausting apparatus according to the invention is given hereinafter by way of non-limiting example, with reference to the accompanying drawings, in which:

- Fig. 1 is a perspective view of one embodiment of the apparatus of the invention fitted in a chimney;
- Fig. 2 is a side view partly in section of another embodiment of the apparatus having the features of the claimed fume-exhausting apparatus;
- Fig. 3 is a perspective and partly cut-away view of the apparatus shown in Fig. 2.

[0012] Referring to the drawings, the fume-exhausting apparatus according to the invention has been generally identified by reference numeral 1.

[0013] The apparatus 1 is adapted to be fitted in a chimney or fireplace of a conventional type known per se comprising a hearth 2, a hood 3 for collecting the fumes produced on the heart, and a flue 4. It comprises a plurality of channels 5 for conveying fumes, located above the hearth 2 and therefore extending within the hood 3. The conveying channels 5 exhibit lower openings 5a directed downwardly, disposed close to the lower inlet mouth 3a of the hood 3, and upper openings 5b directed upwardly and disposed close to a lower end 4a of the flue 4, so that they are affected by a draught effect created thereinto.

[0014] As a whole, the transverse section of the conveying channels 5 has an area corresponding at least to the area of the transverse section of the flue and preferably greater than the latter by 50%.

[0015] In one embodiment shown in Fig. 1, the conveying channels 5, for example defined by lengths of rectilinear pipes having a circular section, are disposed in mutual side by side relation to form a bundle and converge close to the upper portion 3b of the hood 3, so that they substantially occupy, at least close to the upper openings thereof 5b, the whole transverse section of the hood 3, apart from the gaps present between the pipes

as a result of their circular section.

[0016] In this embodiment preferably one main conveying channel or pipe 5c is provided which is disposed centrally substantially above the flame present in the hearth 2, as well as a plurality of auxiliary conveying channels or pipes 5d disposed perimetrically and each of them having a transverse section the area of which is lower than that of the trasverse section of the main pipe 5c.

[0017] Still in accordance with the present invention, provision may be also made for at least one lower plate-like closing element 6a extending close to the lower inlet mouth 3a of the hood 3, provided with through holes sealingly engaging the respective lower end portions of the conveying channels 5.

[0018] If one intends to recover at least part of the fume heat in order to generate hot air, in addition to the lower plate-like closing element 6a an upper plate-like closing element 6b is also provided which is disposed close to the upper portion 3b of the hood 3. The upper plate-like element 6b is also provided with through holes adapted to sealingly engage the upper end portions of the conveying channels 5. In this manner the lower and upper plate-like closing elements, 6a and 6b, substantially define, in cooperation with the hood 3, a heat-exchange sealed chamber with respect to the fumes, crossed by the conveying channels 5 themselves. Suitable air intakes 7 formed in the hood 3 for admitting cold air from the surrounding atmosphere and emitting hot air thereinto (only one admission intake being shown in Fig. 1) enable a forced air circulation to be created, optionally with the aid of ventilation means, which air passing through the gaps present between the conveying channels 5 can be heated by the heat transmitted from the fumes.

[0019] In the embodiment of the invention shown in Figs. 2 and 3, the conveying channels 5 are disposed in mutual side by side relation and in alignment with each other and they occupy the hood volume, and therefore the transverse hood section, only partially. The conveying channels 5 in this embodiment exhibit their lower openings 5a disposed in alignment along the front side of the lower inlet mouth 3a of the hood 3 so as to define a suction area extending along the whole extension of said side.

[0020] Preferentially the conveying channels 5 are integral with each other and consist of a unitary body 8, being divided by partitions 8a. Such unitary body 8 can be easily engaged within an already installed hood in order to improve performance of same in drawing fumes. The upper openings 5b of the conveying channels 5 defined by the partitions 8a open into an interconnecting pipeline 9 at differentiated heights in order not to hinder the respective smoke flows. Preferentially, as shown in Fig. 4, the upper ends 5b of the conveying channels 5 located at the laterally opposite ends of the unitary body 8 communicate with the upper portion of the interconnecting pipeline 9 by two tubular headers 20 exhibiting end portions 20a adapted to be laterally fitted in the interconnecting pipeline as they bend according to the progress direction of the fumes along said pipeline.

[0021] Advantageously, connected in succession to the interconnecting pipeline 9 is a draught duct 10 having an extension enabling one upper end thereof 10a to be directly located in the flue 4. In this manner, close to the upper end 10a there is a negative pressure created by the quick flowing of the fumes from the hood 3, which negative pressure greatly increases the suction effect of the conveying channels 5.

[0022] Operation of a fume-exhausting apparatus, in particular for chimneys and fireplaces, described above mainly as regards structure, is as follows.

[0023] The conveying channels 5 enable the whole fume flow to be divided into partial flows, each of which exhibits a reduced vorticity and greater upward kinetic energy. Practically, the apparatus in question enables the so-called draught effect created within the flue to be moved much closer to the flame or, in other words, to the real fume-producing area, thereby enabling said fumes to be drawn upwardly in a stronger manner. In the traditional prior art solutions the results of said draught effect have been practically zero at distances ranging between 20 and 30 cm from the lower end of the flue itself.

[0024] In particular, in the preferred embodiment shown in Figs. 2 and 3 a suction area extending along the front edge of the hearth is created so as to form a barrier against the emission of fumes towards the room where the fireplace is located.

[0025] It is pointed out that the last-mentioned embodiment of the apparatus makes it possible to intervene on already installed fireplaces with ease, because the apparatus can be readily fitted into a hood and engaged to the front wall thereof. Therefore the apparatus of the invention is capable of making a fireplace flue work properly even if it has an inefficient draught as a result of an imperfect design and/or construction, or at all events is capable of improving performace of a fireplace even under the most unfavourable circumstances.

Claims

1. A fume-exhausting apparatus, in particular for chimneys and fireplaces, comprising a hearth (2) and a hood (3) for collecting said fumes to be sent to a flue (4),
said apparatus comprising a plurality of channels (5, 105) for conveying said fumes, which conveying channels (5, 105) occupy the volume and the transverse section of said hood (3) partially and have lower openings (5a) directed downwardly close to the lower inlet mouth of said hood (3, 103), and upper openings (5b) directed upwardly and communicating with the lower end of the flue characterized

in that said conveying channels (5) exhibit their respective lower openings (5a) aligned along the front side of the lower inlet mouth (3a) of said hood (3).

2. An apparatus according to claim 1, characterized in that said conveying channels (5) are defined by lengths of rectilinear pipes disposed in mutual side by side relation and converging close to an upper portion of said hood (3).

3. An apparatus according to claim 1, characterized in that said conveying channels (5) alltogether exhibit a transverse section the area of which corresponds at least to the area of the transverse section of said flue (4).

4. An apparatus according to claim 1, characterized in that provision is made for at least one lower plate-like closing element (6a) extending close to said lower inlet mouth (3a) of the hood (3) and exhibiting through holes adapted to engage the lower end portions of said conveying channels (5).

5. An apparatus according to claim 4, characterized in that it further comprises an upper plate-like closing element (6b) disposed close to an upper portion (3b) of said hood (3) and exhibiting through holes adapted to engage the upper end portions of said conveying channels (5), said lower (6a) and upper (6b) plate-like closing elements defining, in cooperation with said hood (3), a chamber for producing hot air.

6. An apparatus according to claim 1, characterized in that said conveying channels (5) are aligned and in side-by-side relation and integrally embodied by a unitary body (8) capable of being engaged to an already installed hood (3).

7. An apparatus according to claim 6, characterized in that said unitary body (8) comprises an interconnecting pipeline (9) into which said upper openings (5b) of said conveying channels (5) open, at heights differentiated from each other.

8. An apparatus according to claim 7, characterized in that a draught duct (10) having its upper end (10a) disposed in said flue (4) is connected in succession to said interconnecting pipeline.

Patentansprüche

1. Rauchabzugsvorrichtung, insbesondere für Herde und Kamine, die eine Feuerstelle (2) und eine Haube (3) zum Auffangen des zu einem Rauchabzug (4) zu leitenden Rauchs umfassen,
wobei die Rauchabzugsvorrichtung eine Vielzahl von Rauchleitkanälen (5, 105) umfasst, wobei die Rauchleitkanäle (5, 105) teilweise das Volumen und den Querschnitt der Haube (3) einnehmen und untere, nach unten in Richtung der unteren Haubeneinmündung (3, 103) gerichtete Öffnungen (5a) und obere Öffnungen (5b) aufweisen, die nach oben gerichtet und mit dem unteren Ende des Rauchabzuges verbunden sind, dadurch gekennzeichnet, dass die Rauchleitkanäle (5) die jeweiligen unteren Öffnungen (5a) längs der Vorderseite der unteren Einmündungen (3a) der Haube (3) aneinandergereiht aufweisen.

2. Vorrichtung nach Anspruch 1, dadurch gekennzeichnet, dass die Rauchleitkanäle (5) durch geradlinige, aneinander gereihte Rohrabschnitte festgelegt sind, die in der Nähe des oberen Teils der Haube (3) zusammenlaufen.

3. Vorrichtung nach Anspruch 1, dadurch gekennzeichnet, dass die Rauchleitkanäle (5) insgesamt einen Flächenquerschnitt aufweisen, der mindestens gleich der Fläche des Querschnittes des Rauchkanals (4) sind.

4. Vorrichtung nach Anspruch 1, dadurch gekennzeichnet, dass mindestens ein plattenförmiges, unteres Abschlusselement (6a) vorgesehen ist, das sich im Bereich der unteren Einmündung (3a) der Haube (3) erstreckt und Durchgangsbohrungen aufweist, die untere Endabschnitte der Rauchleitkanäle (5) beanspruchen.

5. Vorrichtung nach Anspruch 4, dadurch gekennzeichnet, dass sie überdies ein plattenförmiges, oberes Abschlusselement (6b) umfasst, das in der Nähe eines oberen Teils (3b) der Haube (3) angeordnet ist und Durchgangsbohrungen aufweist, die obere Endabschnitte der Rauchleitkanäle (5) beanspruchen, wobei die plattenförmigen unteren (6a) und oberen (6b) Abschlusselemente in Mitwirkung mit der Haube (3) eine Kammer zur Erzeugung von Heißluft festlegen.

6. Vorrichtung nach Anspruch 1, dadurch gekennzeichnet, dass die Rauchleitkanäle (5) in einem einzigen, an einer schon installierten Haube (3) in Eingriff bringbaren Körper (8) fest festgelegt, ausgerichtet und angereiht sind.

7. Vorrichtung nach Anspruch 6, dadurch gekennzeichnet, dass der einzige Körper (8) ein Übergangsrohr (9) umfasst, in das an verschiedenen Höhen zueinander die oberen Öffnungen (5b) der Rauchleitkanäle (5) einmünden.

8. Vorrichtung nach Anspruch 7, bei der nach dem Übergangsrohr ein Zugrohr (10) vorgesehen ist,

das ein eigenes oberes, im Rauchrohr (4) angeordnetes Ende (10a) aufweist.

Revendications

1. Dispositif pour évacuer des fumées, en particulier dans les cheminées et les cheminées d'appartement, comprenant un foyer (2) et un manteau (3) pour la collecte des fumées à envoyer à un tuyau de cheminée (4), ledit dispositif comprenant une pluralité de canaux (5, 105) d'acheminement desdites fumées, lesquels (5, 105) occupent partiellement le volume et la section transversale dudit manteau (3) et ont des ouvertures inférieures (5a) dirigées vers le bas à proximité de la bouche d'entrée inférieure dudit manteau (3, 103), et des ouvertures supérieures (5b) dirigées vers le haut et en communication avec l'extrémité inférieure du tuyau de cheminée,
caractérisé en ce que lesdits canaux d'acheminement (5) présentent leurs ouvertures inférieures respectives (5a) alignées le long du côté de face de la bouche d'entrée inférieure (3a) dudit manteau (3).

2. Dispositif selon la revendication 1, caractérisé en ce que lesdits canaux d'acheminement (5) sont définis par des tronçons de tuyaux rectilignes disposés réciproquement côte à côte et convergeant à proximité d'une portion supérieure dudit manteau (3).

3. Dispositif selon la revendication 1, caractérisé en ce que lesdits canaux d'acheminement (5) présentent tous ensemble une section transversale dont l'aire correspond au moins à l'aire de la section transversale dudit tuyau de cheminée (4).

4. Dispositif selon la revendication 1, caractérisé en ce qu'on prévoit au moins un élément de fermeture inférieure en forme de plaque (6a) s'étendant en correspondance de ladite bouche d'entrée inférieure (3a) du manteau (3) et présentant des trous de passage destinés à engager les portions terminales inférieures desdits canaux d'acheminement (5).

5. Dispositif selon la revendication 4, caractérisé en ce qu'il comporte en outre un élément de fermeture supérieure en forme de plaque (6b) disposé à proximité d'une portion supérieure (3b) dudit manteau (3) et présentant des trous de passage destinés à engager les portions terminales supérieures desdits canaux d'acheminement (5), lesdits éléments de fermeture inférieure (6a) et supérieure (6b) en forme de plaque définissant, en coopération avec ledit manteau (3), une chambre pour la production d'air chaud.

6. Dispositif selon la revendication 1, caractérisé en ce que lesdits canaux d'acheminement (5) sont alignés et disposés côte à côte et définis de manière solidaire par un corps unique (8) en mesure de s'engager à un manteau de cheminée (3) déjà installé.

7. Dispositif selon la revendication 6, caractérisé en ce que ledit corps unique (8) comporte une tubulure de raccordement (9) dans laquelle débouchent lesdites ouvertures supérieures (5b) desdits canaux d'acheminement (5), à des hauteurs différenciées entre elles.

8. Dispositif selon la revendication 7, caractérisé en ce qu'un prévoit, à la suite de ladite tubulure de raccordement, une tubulure de tirage (10) ayant son extrémité supérieure (10a) disposée dans ledit tuyau de cheminée (4)

FIG 1

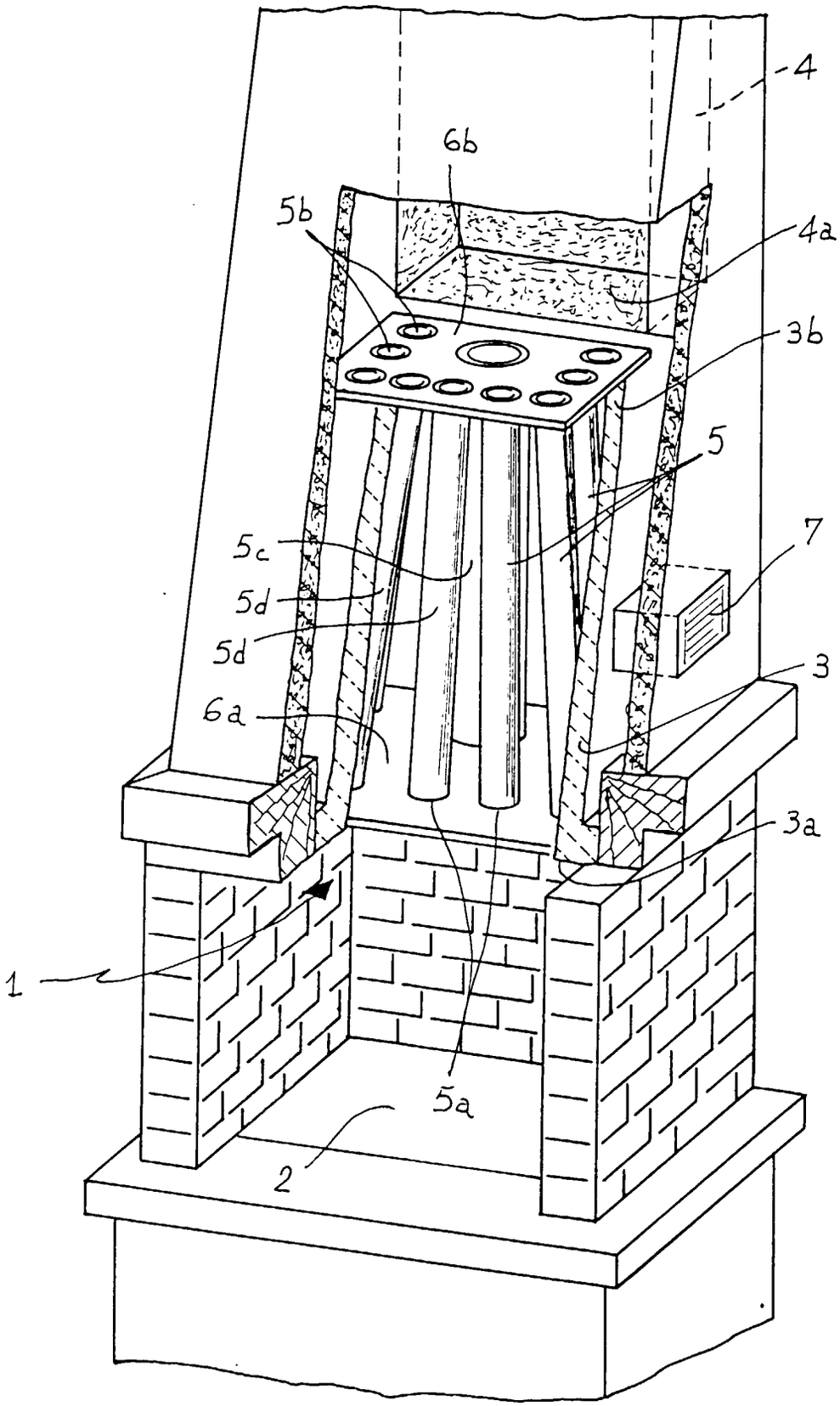

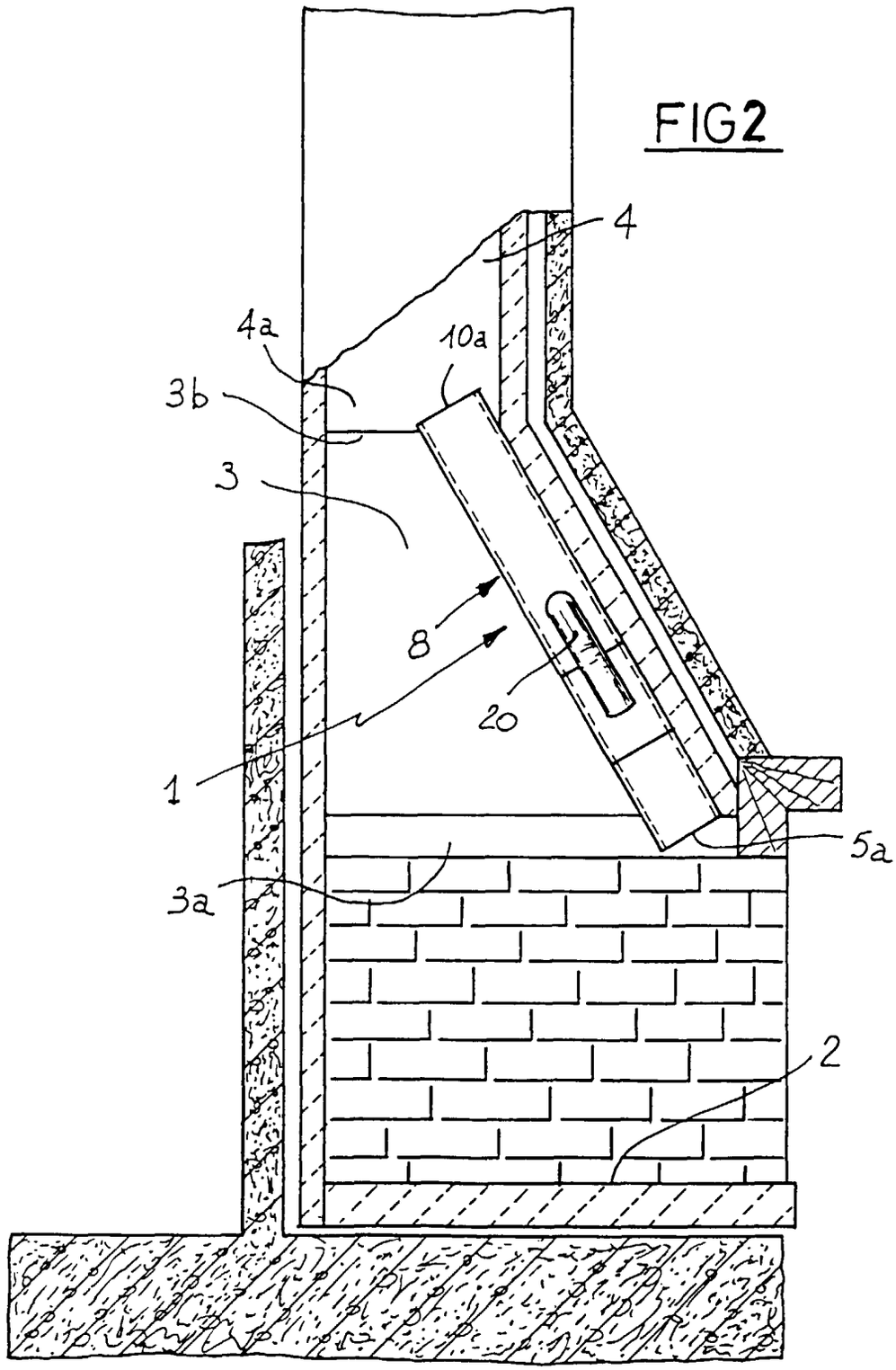
FIG2
4
4a
10a
3b
3
8
20
1
5a
3a
2

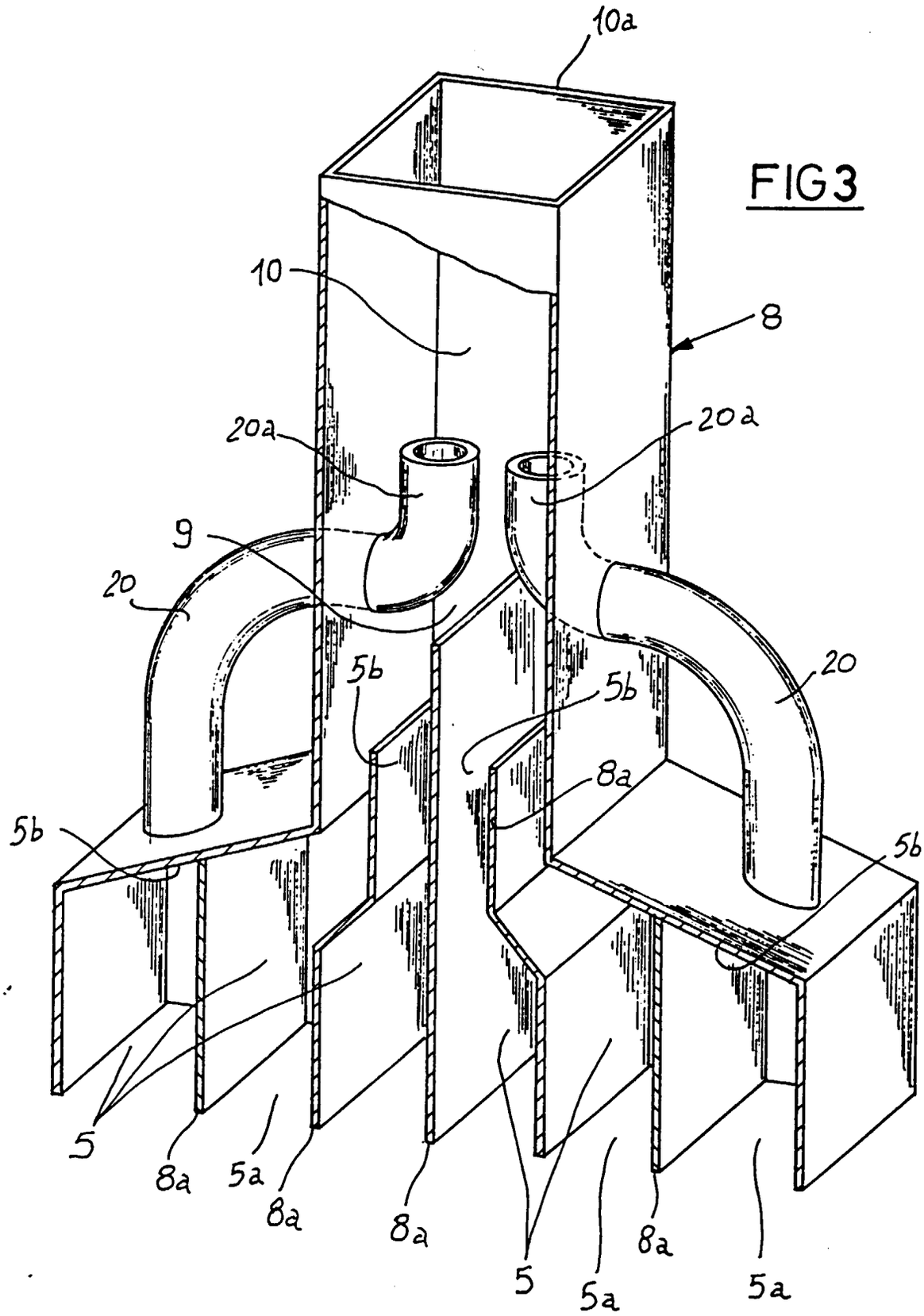

FIG3