Dec. 15, 1964 A. H. STONE 3,161,322

POCKET GAS DISPENSER

Filed Oct. 11, 1961

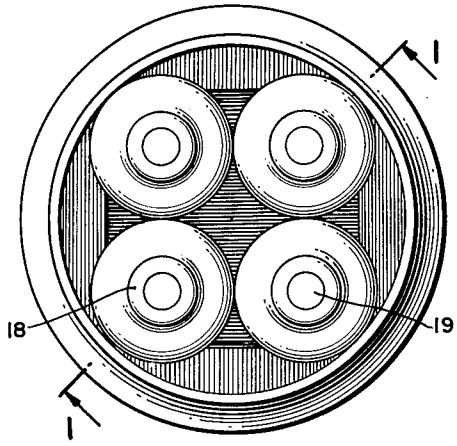

FIG. 2.

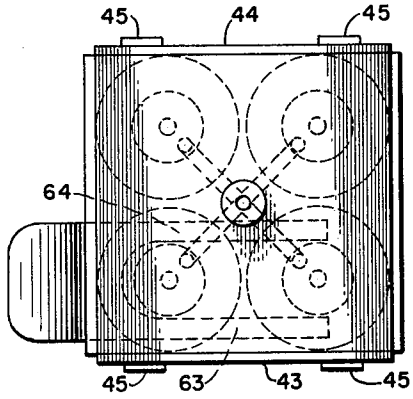

FIG. 4.

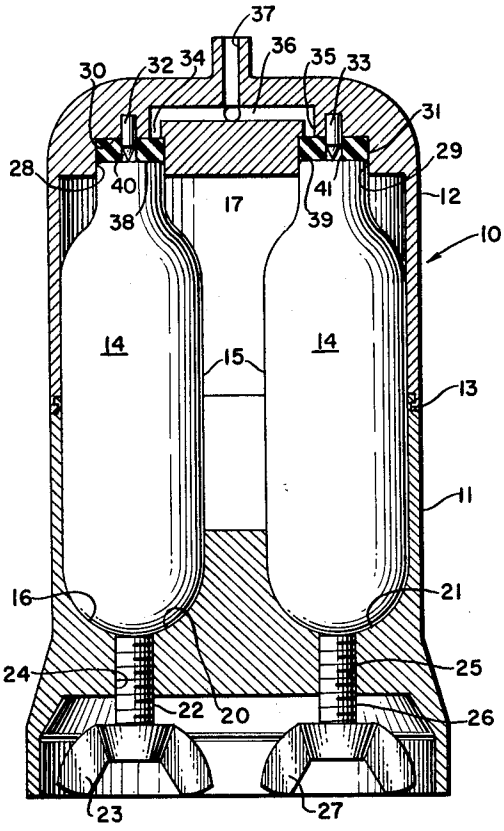

FIG. 1.

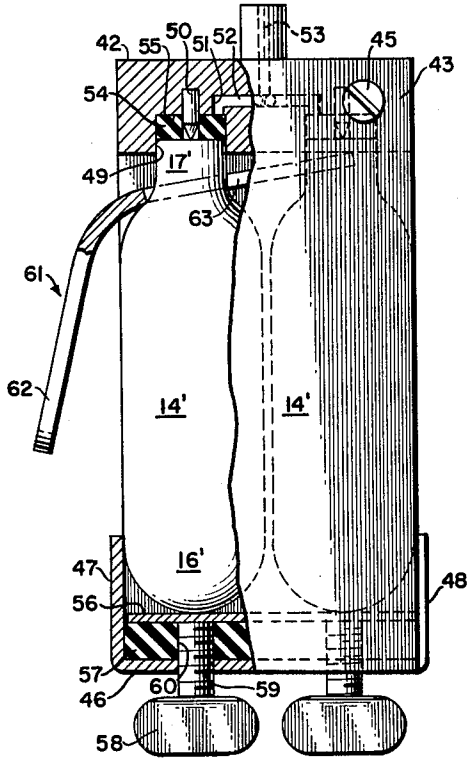

FIG. 3.

INVENTOR

Arthur H. Stone

BY Fisher, Christen & Goodson

ATTORNEYS

United States Patent Office 3,161,322 Patented Dec. 15, 1964

3,161,322

POCKET GAS DISPENSER

Arthur H. Stone, 212 Broadway, Massapequa Park, N.Y., assignor of ten percent to Clive H. Bramson, Oyster Bay, N.Y.

Filed Oct. 11, 1961, Ser. No. 144,367
4 Claims. (Cl. 222—5)

This invention relates to portable gas dispensers, and more particularly to a device suitable for dispensing controlled amounts of gas from small metal cartridges commonly used for storing such gases as nitrous oxide, carbon dioxide, oxygen and so forth.

The apparatus covered by this invention is compact in size and provides a convenient way in which a supply of gas contained in one or more cartridges can be carried in the pocket of a suit or in a ladies handbag so that a quantity of gas useful for medical or other emergency purposes may always be immediately available.

Further objects and advantages of the invention will be apparent after reading the following specification in connection with the attaached drawing, in which:

FIG. 1 is a cross-sectional elevation of a preferred form of portable gas dispenser in accordance with the present invention;

FIG. 2 is a plan view of the device of FIG. 1 with the upper portion of the container removed;

FIG. 3 is a side elevation of a modified form of the invention with a portion of the enclosing structure broken away; and

FIG. 4 is a plan view of the modification shown in FIG. 3.

The preferred form of the invention shown in FIGS. 1 and 2 comprises a holder, generally indicated by the numeral 10, which may be molded of plastic material or fabricated of metal. For convenience in loading and unloading the device, the holder may comprise a base portion 11 and a top portion 12, which may be detachably joined together, as at 13, by a screw-threaded or bayonet-type connection.

The particular gas desired is initially stored under very high pressure in metal cartridges 14 of a type which is well known in the commercial market. Such cartridges include an elongated cylindrical body portion 15 having a rounded base 16 at one end and a reduced neck portion 17 at the other end terminating in a cylindrical outlet sealed by a frangible metal seal 19.

For convenience in positioning the cartridges 14, the interior of the base 11 may be provided with a number of recesses to slidably receive the rounded base portion 16. In the form shown in the drawing, the holder is shown as containing four cartridges in FIG. 2, but only two of the recesses, indicated at 20 and 21, are shown, and it will be understood that a greater or less number of cartridges could be provided for by suitable modification of the holder. An actuator mechanism is also provided for imparting axial movement to each of the gas cartridges and as shown in the drawing, this may take the form of a threaded bolt 22 having a wing-shaped head 23 threadedly received within the bore 24 which extends in axial alignment into the recess 20. Similarly, the recess 21 is provided with a bore 25 which threadedly receives the bolt 26 having a wing-shaped head 27. It will be understood that each gas cartridge 14 associated with the holder will be provided with its individual actuating mechanism.

Within the top portion 12 of the holder, there are provided a suitable number of sockets to slidably receive the reduced neck portion 17 of each of the cartridges 14 contained therein. In FIG. 1, two of the sockets are indicated by numerals 28 and 29. The inner ends of the sockets terminate respectively in flat surfaces or walls

30 and 31 and centrally positioned within these sockets are the outwardly projecting solid puncturing pins 32 and 33. Each of the flat surfaces of the sockets is also provided with an outlet port, indicated respectively by numerals 34 and 35, eccentrically disposed with respect to the respective puncturing pins. It will then be understood that each of these sockets is similarly provided with an outlet port and that all of these ports are arranged in communication with a common outlet conduit 36, which is itself arranged in communication with a single outlet port 37.

Each of the sockets is also provided with valving means which in the preferred form of the invention includes the flat washers 38 and 39, respectively provided with central apertures 40 and 41, which surround the respective puncturing pins 32 and 33 loosely and also extend across the respective outlet ports 34 and 35. These washers are preferably composed of some relatively soft, yieldable elastomeric material, such as neoprene or the like, and are comparatively thick so that they may effectively seal their respective outlet ports when the gas cartridges 14 are in the position shown in FIG. 1 prior to puncturing of the frangible seals.

In operation, when it is desired to utilize gas contained in one of the cartridges, as for example the left hand cartridge shown in FIG. 1, the first step is to turn the wing head 23 to advance the threaded bolt 22 upwardly to force the frangible seal 19 into engagement with the solid piercing or puncturing pin 32. At the same time, it will be observed that the outlet 18 of the gas cartridge will compress the washer 38 sealing the outlet port 34 to prevent the escape of gas after the frangible seal has been punctured. Under these conditions, no gas may escape from the socket 28 either downwardly around the neck of the cartridge, or through the outlet port; but since the frangible seal on the cartridge has been punctured, the device is in condition to dispense gas as soon as needed. However, in order to insure that the gas will flow into the outlet port 37, the bolt 26 should be turned by its wing head 27 to advance the right hand gas cartridge and slightly compress the washer 39 to seal port 35.

Once the frangible seal has been broken on the left hand gas cartridge and it is desired to release the gas into the outlet port 37, all that is necessary to do is to reverse the direction of rotation of the actuator bolt 22 to allow the cartridge to move downwardly slightly to decompress the washer 38. This permits gas from the cartridge to pass upwardly through the central aperture 40, between the washer 38 and the flat surface 30 of the socket and into the port 34, from which point the gas passes through the conduit 36 and into the outlet 37. The rate at which gas is released can be controlled by turning the bolt 22 to increase or decrease the pressure exerted by the outlet 18 of the gas cartridge on the washer 38. If a sufficient supply of gas has been supplied before the left hand cartridge is exhausted, the flow can be stopped completely by turning the bolt 22 to move the cartridge upwardly a sufficient amount to compress the washer into sealing engagement with the outlet port 34. When the gas is completely exhausted from the left hand cartridge, the port 34 is sealed in the manner just described and a further supply of gas may be furnished by one of the other gas cartridges such as the right hand cartridge. The manner in which the additional supply is furnished is similar to the method already described in connection with the left hand cartridge. The bolt 26 is turned to move the right hand cartridge upwardly a sufficient amount so that its frangible seal will be broken by the puncturing pin 33, the amount of this movement being sufficient to compress the washer 39 so that it seals

the outlet port 35. The bolt 26 is then backed off to permit gas to pass through the central aperture 41, between the washer 39 and the flat surface 31 of the socket, and into the outlet port 35. Since the washer 38 has been compressed previously a sufficient amount to seal the port 34, the gas from port 35 must pass through conduit 36 into the outlet port 37. Similarly, if it is desired to cut off the gas before the right hand cartridge has been exhausted, the bolt 26 may be turned to move the right hand cartridge upwardly an amount sufficient to compress the washer 39 to seal the outlet 35. The same procedure is effective to initiate the flow of gas from other cartridges in the holder and thereafter to regulate or stop the flow of gas.

In the modified form of the invention, shown in FIGS. 3 and 4, the holder includes a rectangularly-shaped top cap 42, which may be molded or fabricated from metal. Attached to this top cap is a depending generally U-shaped strap preferably made of metal and having side portions 43 and 44 secured to the top cap at their upper ends as by means of the screws 45 and joined at their other ends by the flat bottom portion 46. To assist in positioning the gas cartridges 14' within the holder, the flat bottom may be provided with upwardly turned flanges 47 and 48.

As in the case with the preferred modification, the top cap 42 may be provided with one or more sockets 49 to slidably receive the reduced neck portion 17' of the gas cartridge. The socket is also provided with a centrally disposed downwardly projecting puncturing pin 50 and an eccentrically disposed outlet port 51 in communication with the common outlet conduit 52 and a single outlet port 53. The socket 49 is also provided with a flat washer 54 disposed between the outlet of the cartridge and the flat inner surface or wall 55 of the socket. The rounded base 16' of the cartridge rests upon a relatively thin flat plate 56 which, in turn, is supported on the bottom 46 by a thick pad 57 of soft, yieldable, elastomeric material. The thickness of this pad is such that when the cartridge 14' is normally supported in the holder, a slight pressure will be exerted against the washer 54 sufficient to close the outlet 51, but not sufficient to cause the puncturing pin 50 to pierce the frangible seal of the cartridge. A wing bolt 58 is threadedly received in the opening 59 in the bottom plate and extends upwardly through the opening 60 in the pad 57 so as to be capable of contact with the underside of the plate 56 in axial alignment with the gas cartridge 14'.

In this modification, a separate actuating lever, indicated generally at 61, is provided. This lever comprises a strip of flat metal having a finger-engaging portion 62 at one end, while the other end is bifurcated and bent at almost right angles to form the leg portions 63 and 64, spaced apart a sufficient distance to straddle the reduced neck portion 17' of the gas cartridge.

In operation of the modified form of the invention shown in FIGS. 3 and 4, the frangible seal of the cartridge 14' is punctured by turning the wing bolt 58 to push the cartridge upwardly into piercing engagement with the solid puncturing pin 50. After this has been done, the wing bolt is turned back down a sufficient distance so that its upper end is spaced slightly below the plate 56. In this position, the pad 57 is exerting enough pressure on the washer 54 to seal the outlet 51. However, when the actuating lever 61 is inserted in position as shown in the drawing, with the extremities of the leg portions 63 and 64 in contact with the underside of the top cap 42, a slight downward pressure on the finger portion 62 will force the cartridge 14' downwardly against the resistance of the pad 57 a sufficient amount to decompress the washer 54 to permit gas to escape through the central aperture in the washer and into the outlet 51, where it will be further conducted by the conduit 52 to the outlet port 53. When pressure is released from the finger portion 62, the pad 57 will again force the cartridge upwardly to compress the washer 54 and close the outlet port 51.

Having described two forms in which the invention may be practiced, it will be understood that other improvements and modifications may be made by those skilled in the art which would come within the scope of the annexed claims. In addition, it should be understood that the invention is applicable to the dispensing of gases of any character suitable for storage in gas cartridges of the type shown and described. Furthermore, it will also be evident that where the holder is capable of receiving a plurality of gas cartridges, it is not essential that all of the cartridges contain the same type of gas. In fact, it is within the purview of the invention to permit the dispensing of more than one gas at the same time through the common outlet, since it will be understood that the release of gas from each cartridge may be individually controlled to permit a regulated amount of gas from any number of cartridges simultaneously into the common outlet conduit.

I claim:

1. In a holder for a gas cartridge of the type having a discharge outlet initially closed by a frangible seal, the combination including recessed socket means to axially slidably receive the discharge outlet of a cartridge, said recess terminating inwardly in a flat wall, a solid puncturing pin projecting axially of and outwardly from said wall, said wall also being provided with an eccentrically disposed outlet port, washer means of soft, yieldable, elastomeric material in said recess between said wall and the discharge outlet of the cartridge, said washer means forming a seal between said cartridge and said socket means, and means to move the cartridge axially to pierce the frangible seal and compress said washer means to seal the outlet port and the discharge outlet of the cartridge, said latter means being adjustable to allow expansion of said washer means to unseal said outlet port and withdraw the pin from said cartridge to allow passage of the gas through said discharge port of the cartridge and thence through the outlet port.

2. In portable holders for elongated gas cartridges of the type having a reduced neck portion at one end terminating in a discharge outlet initially closed by a frangible seal, the combination including, a support wall provided with a recess to axially slidably receive the reduced neck portion of a gas cartridge, said recess having a flat surface at one end thereof, said flat surface having an outlet port disposed eccentrically therethrough, means spaced from the support wall to engage with the base of the cartridge, said spaced means including resilient means to urge said cartridge axially toward the flat surface of said recess, solid puncturing means projecting axially of said flat surface and yieldable valving means in said recess, said valving means forming a seal between said cartridge and said recess, means to move said cartridge in one direction with respect to the recess to pierce the frangible seal and compress said valving means to seal the outlet port, and means to urge the cartridge in the opposite direction to controllably allow passage of gas through the pierced frangible seal and thence through the outlet port.

3. The invention as defined in claim 2, wherein said means to urge the cartridge in the opposite direction comprises a lever means engageable between the cartridge and the support wall.

4. In a holder for a gas cartridge of the type having a discharge outlet initially closed by a frangible seal, the combination including recessed socket means to axially slidably receive the discharge outlet of a cartridge, said recess terminating inwardly in a flat wall, a puncturing pin projecting outwardly from said wall, said wall also being provided with an eccentrically disposed outlet port, said outlet port being adjacently disposed with respect to said puncturing pin, washer means of soft, yieldable, elastomeric material in said recess between said wall and the discharge outlet of the cartridge, said material forming a

seal between said cartridge and said socket means, and means to move the cartridge axially to pierce the frangible seal and compress said washer means to seal the outlet port, said latter means being adjustable to allow expansion of said washer means to unseal said outlet port and withdraw the pin from said cartridge to allow passage of the gas through said discharge outlet of the cartridge and thence through the outlet port.

References Cited in the file of this patent

UNITED STATES PATENTS

2,666,667	Ward	Jan. 19, 1954
2,864,534	Wrenn	Dec. 16, 1958
2,921,711	Mack	Jan. 19, 1960
2,944,546	Ziherl et al.	July 12, 1960
3,012,694	Johnston	Dec. 12, 1961