(No Model.)

H. A. FRIDÉN & A. SWANSON.

PLOW.

No. 590,494. Patented Sept. 21, 1897.

Fig. 1.

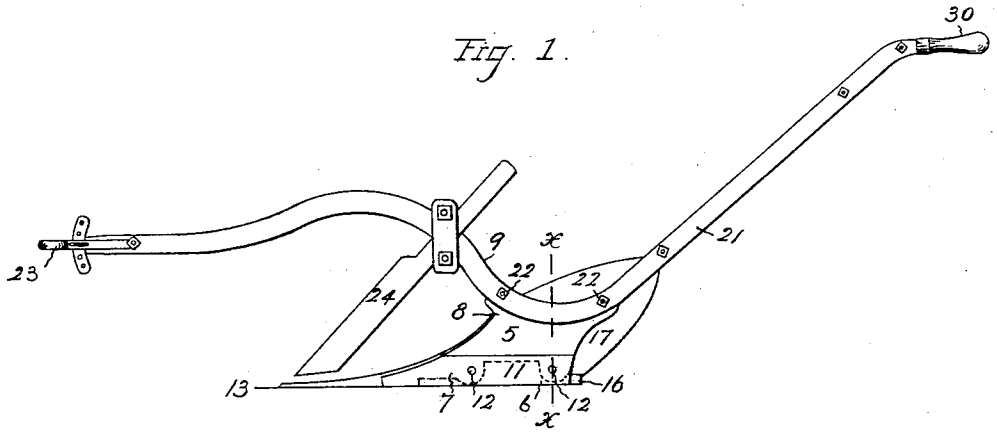

Fig. 2.

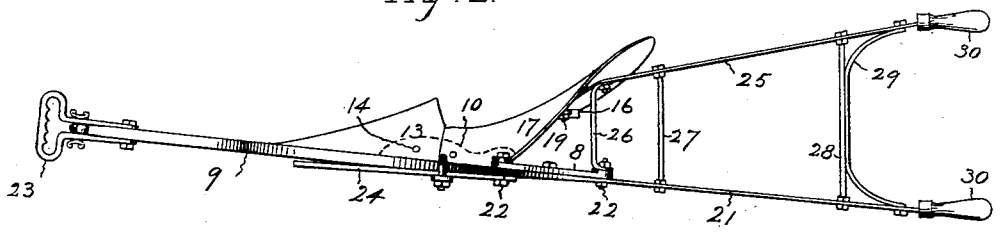

Fig. 3.

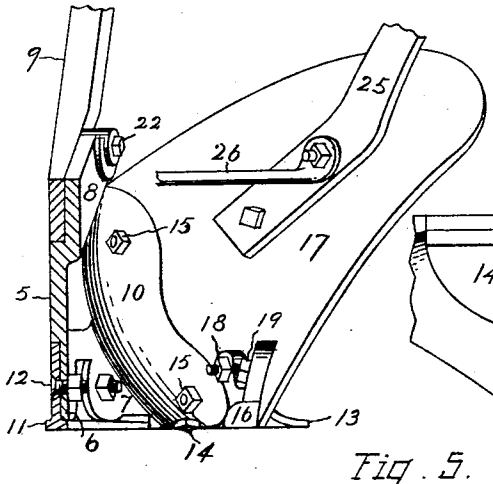

Fig 4.

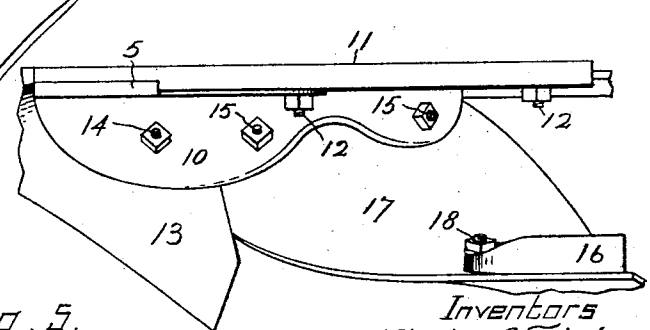

Fig. 5.

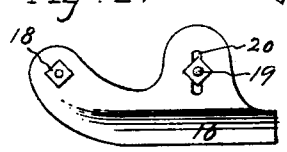

Witnesses
A. W. Stipek
P. J. Egan

Inventors
Henning A. Fridén
Andrew Swanson.
By James Shepard.
Atty.

THE NORRIS PETERS CO., PHOTO-LITHO., WASHINGTON, D. C.

UNITED STATES PATENT OFFICE.

HENNING A. FRIDÉN AND ANDREW SWANSON, OF NEW BRITAIN, CONNECTICUT.

PLOW.

SPECIFICATION forming part of Letters Patent No. 590,494, dated September 21, 1897.

Application filed October 31, 1896. Serial No. 610,724. (No model.)

To all whom it may concern:

Be it known that we, HENNING A. FRIDÉN and ANDREW SWANSON, citizens of Sweden, residing at New Britain, in the county of Hartford and State of Connecticut, have invented certain new and useful Improvements in Plows, of which the following is a specification.

Our invention relates to an improvement in plows; and the main object of our improvement is to construct a plow of superior strength and durability at a small cost.

In the accompanying drawings, Figure 1 is a side elevation of our plow. Fig. 2 is a plan view of the same. Fig. 3 is an enlarged vertical section of the landside of our plow on the line *x x* of Fig. 1, the other side being shown in elevation and some of the parts being broken off. Fig. 4 is a reverse plan of the main portion of our plow with parts broken off. Fig. 5 is a detached side elevation of the shoe for the moldboard side of the plow.

We build the main portion of our plow upon the frame 5, whose vertical side forms the principal portion of the landside of the plow, said vertical side being provided at its lower edge with rabbeted ears 6 7 (the contours of which are indicated by broken lines in Fig. 1) and with a rabbeted upper edge 8 to receive a portion of the plow-beam 9. Said frame at its forward end is also provided with a moldboard and share flange 10, as shown in Figs. 3 and 4 and as indicated by broken lines in Fig. 2. We secure a steel shoe 11 to the rabbeted ears at the lower edge of said frame on the landside by means of rivets or bolts 12, letting the forward end of said shoe reach out and lap upon the share 13. Said plowshare is also formed of steel, and it is secured to the flange 10 by a bolt 14. The moldboard 17 is formed of sheet-steel bent to form and secured to the flange 10 by bolts 15. A shoe 16, of steel, is secured to the heel of the moldboard 17 by means of a bolt or screw 18, on which said shoe can swing, and a second bolt or screw 19, that passes through a slot 20, Fig. 5, of said shoe and the moldboard, whereby upon loosening the bolt 19 the heel of the shoe may be raised or lowered, as may be desired, and then secured in place by tightening up said bolt.

The plow-beam 9 and one of the handle-arms 21 are formed in one and the same continuous piece of wrought-iron or steel and are firmly secured to the upper rabbeted portion of the frame by bolts 22. The plow-beam may be provided at its forward end with any desired form of clevis 23 and may also be provided with any desired form of colter 24. The other handle-arm 25, also of wrought-iron or steel, is bolted to the moldboard, and a cross-brace 26 extends from the moldboard to the rear upper corner of the frame 5, the same bolts that hold the handle-arms in place also serving to hold said cross-brace. Other braces 27, 28, and 29, Fig. 2, are also secured to the handle-arms, and said arms are provided at the upper and rear ends with handles 30, of wood or other desired material.

We claim as our invention—

1. A plow comprising the frame forming the main portion of the landside and also the share and moldboard flange, the landside-shoe secured to said frame, the share and moldboard secured to said flange, the continuous metal plow-beam and handle-arm bolted to the rabbeted upper edge of said frame, a companion metal handle-arm and cross-braces, substantially as described.

2. A plow having a bent-up sheet-steel moldboard and the moldboard-shoe 16 bolted upon the inner side of the moldboard-heel and slotted at one end for vertical adjustment thereon, substantially as described.

3. A plow having a cast-metal frame with rabbeted ears at its lower edge, a rabbeted upper edge, and the moldboard and share flange 10 at its forward end, a steel shoe secured to the rabbeted ears at the lower edge of said frame, a share abutting against said shoe and extending over a portion of said flange 10 to which it is bolted, the sheet-metal moldboard also bolted to said flange 10, a plow-beam, handle-arms, and cross-braces, substantially as described.

HENNING A. FRIDÉN.
ANDREW SWANSON.

Witnesses:
JAMES SHEPARD,
A. W. STIPEK.