AU9531458

(12) PATENT ABRIDGMENT (11) Document No AU-B-31458/95
(19) AUSTRALIAN PATENT OFFICE (10) Acceptance No 700800

(54) Title
HIERARCHICAL COMMUNICATION SYSTEM PROVIDING INTELLIGENT DATA, PROGRAM AND PROCESSING MIGRATION

International Patent Classification(s)
(51)[6] **H04L 012/44** **H04B 007/26** **H04L 012/54**

(21) Application No **31458/95** (22) Application Date **21.07.95**

(87) PCT Publication Number : **WO96/03823**

(30) Priority Data

(31) Number	(32) Date	(33) Country
08/279148	**22.07.94**	**US UNITED STATES OF AMERICA**
08/487609	**07.06.95**	**US UNITED STATES OF AMERICA**

(43) Publication Date : **22.02.96**

(44) Publication Date of Accepted Application : **14.01.99**

(71) Applicant(s)
NORAND CORPORATION

(72) Inventor(s)
RONALD L. MAHANY; GUY J. WEST; ALAN G BUNTE; ARVIN D. DANIELSON; MICHAEL D MORRIS; ROBERT C MEIER

(74) Attorney or Agent
SPRUSON & FERGUSON , GPO Box 3898, SYDNEY NSW 2001

(56) Prior Art Documents
US 5029183

(57) Claim

1. A communication network having a plurality of computing devices at least one of which is a mobile terminal device configured with a wireless transceiver, said communication network comprising:

a plurality of access devices being arranged in a spanning tree configuration to support communications among the plurality of computing devices; and

at least one of said plurality of access devices being configured to selectively intercept, store and, for future requests, forward requested data, thereby reducing traffic on the communication network.

CORRECTED VERSION*

PCT

pages 33/65 and 39/65, drawings, replaced by new pages bearing the same number; due to late transmittal by the receiving Office

WORLD INTELLECTUAL PROPERTY ORGANIZATION
International Bureau

INTERNATIONAL APPLICATION PUBLISHED UNDER THE PATENT COOPERATION TREATY (PCT)

(51) International Patent Classification 6 :		(11) International Publication Number:
H04L 12/44, 12/54, H04B 7/26	A1	WO 96/03823
		(43) International Publication Date: 8 February 1996 (08 02 96)

(21) International Application Number: PCT/US95 09380

(22) International Filing Date: 21 July 1995 (21.07.95)

(30) Priority Data:

08/279,148	22 July 1994 (22.07.94)	US
08/487,609	7 June 1995 (07.06.95)	US

(71) Applicant: NORAND CORPORATION [US/US]; 550 Second Street Southeast, Cedar Rapids, IA 52401 (US).

(72) Inventors: MAHANY, Ronald, L 3133 Adirondack Drive, N.E., Cedar Rapids, IA 52402 (US). WEST, Guy, J.; 114 S. Washington, Lisbon, IA 52253 (US). BUNTE, Alan, G 5510 Hickorywood Court, Cedar Rapids, IA 52411 (US). DANIELSON, Arvin, D.; 1560 Bramblewood, Solon, IA 52333 (US). MORRIS, Michael, D 335 Trailridge Road S.E., Cedar Rapids, IA 52403 (US). MEIER, Robert, C 407 Sinclair Avenue S.E., Cedar Rapids, IA 52403 (US).

(74) Agents: WINSLADE, Christopher, C. et al McAndrews, Held & Malloy Ltd., Suite 3400, 500 West Madison Street, Chicago, IL 60661 (US).

(81) Designated States: AU, CA, European patent (AT, BE, CH, DE, DK, ES, FR, GB, GR, IE, IT, LU, MC, NL, PT, SE).

Published

With international search report.

Before the expiration of the time limit for amending the claims and to be republished in the event of the receipt of amendments.

(54) Title: HIERARCHICAL COMMUNICATION SYSTEM PROVIDING INTELLIGENT DATA, PROGRAM AND PROCESSING MIGRATION

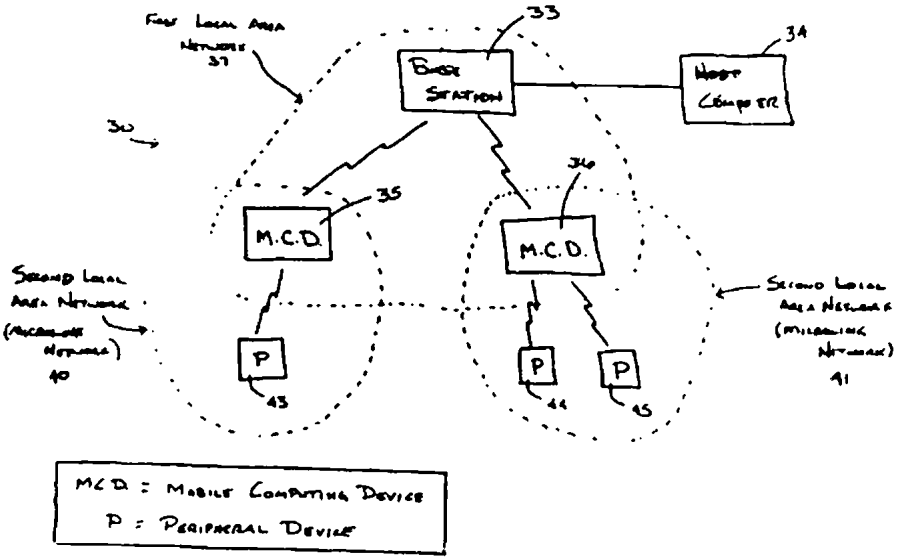

(57) Abstract

A hierarchical communication system (30), arranged in a spanning tree configuration, is described in which wired and wireless communication networks (37, 40, 41) exhibiting substantially different characteristics are employed in an overall scheme to link portable or mobile computing devices (35, 36). Copies of data, program code and processing resources are migrated from their source toward requesting destinations based on request frequency, communication link costs and available local storage and/or processing resources. Each appropriately configured network device (33, 35, 36) acts as an active participant in network migration. In addition, portable two dimensional (2-D) code reading terminals (43, 44, 45) are configured to wirelessly communicate compressed 2-D images towards stationary access servers (33) that identify the code image through decoding and through comparison with a database of images that have previously been decoded and stored.

* (Referred to in PCT Gazette No. 13/1996, Section II)

HIERARCHICAL COMMUNICATION SYSTEM PROVIDING INTELLIGENT DATA, PROGRAM AND PROCESSING MIGRATION

TECHNICAL FIELD

The present invention relates generally to communication networks having a plurality of wired and/or wireless access servers configured to provide remote processing and data storage. More specifically, this invention relates to the intelligent migration of programs and data through a wireless and hardwired communication network comprised of a plurality of access servers, computers and peripherals.

BACKGROUND OF THE INVENTION

Multiple radio base station networks have been developed to overcome a variety of problems with single radio base station networks such as spanning physical radio wave penetration barriers, wasted transmission power by portable computing devices, etc. However, multiple radio base station networks have their own inherent problems. For example, in a multiple base station network employing a single shared channel, each base station transmission is prone to collision with neighboring base station transmissions in the overlapping coverage areas between the base stations. Therefore, it often proves undesirable for each base station to use a single or common communication channel.

In contradistinction, to facilitate the roaming of portable or mobile devices from one coverage area to another, use of a common communication channel for all of the base stations is convenient. A roaming device may easily move between coverage areas without loss of connectivity to the network.

Such exemplary competing commonality factors have resulted in tradeoff decisions in network design. These factors become even more significant when implementing a frequency hopping spread spectrum network. Frequency hopping is a desirable transmission technique because of its ability to combat frequency selective fading, avoid narrowband interference, and provide multiple communications channels.

Again, however, changing operating parameters between coverage areas creates difficulties for the roaming devices which move therebetween. In particular, when different communication parameters are used, a portable or mobile device roaming into a new base station coverage area is not able to communicate with the new base station without obtaining and synchronizing to the new parameters. This causes communication backlog in the network.

Computer terminals and peripheral devices are widely used. Many types of computer terminals exist which vary greatly in terms of function, power and speed. Many different types of peripheral devices also exist, such as printers, modems, graphics scanners, text scanners, code

readers, magnetic card readers, external monitors, voice command interfaces, external storage devices, and so on.

To communicate with such peripheral devices, portable computers have been adapted to use RF (Radio Frequency) and infrared communication. Such configurations, however, do not always provide for efficient communication. For example, a portable computer device may be mounted in a delivery truck and a driver may desire to transmit data to, or receive data from, a host computer or peripheral device at a remote warehouse location. While permitting such transmissions, wide area networks (WANs) only provide point-to-point communications, use a narrow bandwidth, and often exhibit heavy communication traffic. Moreover, WANs require relatively higher transmission power -- a negative factor in the ever increasing need for power savings associated with portable transceiving devices. As a result, WANs are generally slow and expensive, and simply do not provide an effective overall solution.

The need for portable, or otherwise mobile, devices has led to smaller, lower power designs. Portable computer terminals have achieved such size and power reductions by decreasing local processing and storage resources. In contrast, application programs are growing in size and functionality, requiring more and more processing and storage resources to operate. As a result, portable computer terminals have been effectively disabled from independently performing many needed tasks.

Others have been stretched to a nearly unacceptable limit of portability, battery life and processing and storage ability.

To address such needed tasks, remote processing and storage techniques are currently being used. For example, stationary remote host computers having superior processing and storage capability are often connected via a WAN network to a mobile computer terminal. In such configurations, whenever the mobile terminal desires access to data, it sends a request across the WAN for such data. Similarly, when it desires remote processing, the mobile computer terminal formulates a request which is sent to the host computer over the WAN. However, the mobile terminal is still required to use the relatively expensive and delayed services provided by the WAN for each such request, which often prove unacceptable for a given task.

Similarly, the relaying of communications through even lower power radio networks is required in many multi-hop radio environments. Repetitive requests and associated delivery of data, program or processing resources from a source (e.g., a mobile computer terminal) to a destination (e.g., a host computer) takes its toll on overall network performance.

PATENT TRADEMARK OFFICE

It is an object of the present invention to ameliorate one or more disadvantages of the prior art

27 10 98 31458

IN LT 01061 BFD

SUMMARY OF THE INVENTION

Therefore, the invention discloses a communication network having a plurality of computing devices at least one of which is a mobile terminal device configured with a wireless transceiver, said communication network comprising:

a plurality of access devices being arranged in a spanning tree configuration to support communications among the plurality of computing devices; and

at least one of said plurality of access devices being configured to selectively intercept, store and, for future requests, forward requested data, thereby reducing traffic on the communication network.

Before storing requested data, processing resources, or program code, an access device may consider a number of factors including the cost of re-obtaining the requested data, processing resources, or program code, the frequency that the data, processing resources, or program code is requested, the amount of its available storage capacity, and the size of the data, processing resources, or program code.

The access device may selectively delete stored data, etc. and may consider the factors listed above before doing so.

The invention further discloses a communication network having a computing device and a mobile terminal device configured with a wireless transceiver, said communication network comprising:

a data source,

a plurality of access devices being arranged to provide a communication pathway between said mobile terminal device and said computer device; and

at least one of said plurality of access devices being configured to monitor communication traffic through the at least one of said plurality of access devices and to selectively store for future forwarding requested data so as to shorten the communication pathway from the data to said mobile terminal device.

The invention yet further discloses a communication network having at least one mobile terminal device comprising a two-dimensional code reading device configured with a first wireless transceiver, said communication network comprising:

a plurality of access devices being arranged to maintain wireless communication with a two-dimensional code reading device;

at least one of said plurality of access devices comprising a second wireless transceiver for receiving signals representative of two-dimensional images captured by a two-dimensional code reading device, and a code processing circuit for decoding the received signal.

The invention yet further discloses a processing device in a communication network, said processing device comprising a mobile terminal device having at least one two-dimensional code reading device configured with a first wireless transceiver, said processing device further comprising:

a second wireless transceiver for receiving signals representative of two-dimensional images captured by a two-dimensional code reading device;

a code processing circuit for decoding the signals received from the two-domensional code reading device; and

said code processing circuit delivering to the two-dimensional code reading device via said second wireless transceiver an indication of successful image decoding.

The processing device may further comprise an image database for storing signals representative of two-dimensional images. Such images are used by the processing circuit for comparison with received signals so as to aid in the code identification process. A decode algorithm might also be used, either alone or in combination with attempted identification through image database comparison.

Moreover, in some configurations, the terminal device also monitors the flow of data to the portable computing device, and, based on such monitoring, said terminal device selectively migrates data into local storage. Similarly, in other configurations, the terminal device also monitors the flow of program code to the portable computing device, and, based on such monitoring, said terminal device selectively migrates program code into local storage. In yet other configurations, the terminal device monitors processing requests from the portable computing device, and, based on such monitoring, said terminal device selectively migrates programming resources into local storage.

BRIEF DESCRIPTION OF THE DRAWINGS

Fig. 1A is a diagrammatic illustration of a hierarchical communication system built in accordance with the present invention.

Fig. 1B is a diagrammatic illustration of another hierarchical communication system built in accordance with the present invention.

Fig. 1C is a diagrammatic illustration of still another hierarchical communication system built in accordance with the present invention.

Fig. 2 illustrates an embodiment of a basic access interval structure used by a hierarchical network of the present invention.

Figs. 3A and 3B illustrate the frequency of operation periodically changing corresponding to access interval boundaries in a frequency hopping communication protocol of the present invention.

Figs. 4A and 4B illustrate more than one access interval being used per hop in a frequency hopping communication protocol of the present invention.

Fig. 5A illustrates an embodiment of an access interval used by the hierarchical network of the present invention wherein a reservation phase is Idle Sense Multiple Access.

Fig. 5B illustrates an embodiment of an access interval used by the hierarchical network of the present invention wherein a device response follows a reservation poll.

Fig. 6A illustrates an embodiment of a [illegible] interval used by the hierarchical network of the present invention having multiple reservation slots for transmission of a Request For Poll signal.

Fig. 6B illustrates an embodiment of an access interval used by the hierarchical network of the present invention wherein general devices contend for channel access.

Fig. 7A illustrates a sequence in an access interval used by the hierarchical network of the present invention for transferring data from a remote device to a control point device.

Fig. 7B illustrates a sequence in an access interval used by the hierarchical network of the present invention for transferring data from a control point device to a remote device.

Fig. 8 illustrates a preferred embodiment of an access interval used by the hierarchical network of the present invention.

Figs. 9A and B conceptually illustrate how multiple NETs may be employed in an idealized cellular-type installation according to the present invention.

Fig. 10 illustrates an access point coverage contour overlap for the multiple NETs infrastructured network of Fig. 1.

Fig. 11 illustrates hopping sequence reuse in a multiple NET configuration of the present invention.

Fig. 12 illustrates a hierarchical infrastructured network of the present invention wherein a wireless link connects access points on separate hard wired LANs.

Fig. 13 illustrates a hierarchical infrastructured network of the present invention including a wireless access point.

Fig. 14 illustrates conceptually access points communicating neighboring access point information to facilitate roaming of portable/mobile devices.

Fig. 15 illustrates a secondary access interval used in the MicroLAN or peripheral LAN in the hierarchical communication network according to the present invention.

Fig. 16 is a flow chart illustrating the selection of an access point by a mobile computing device for communication exchange.

Fig. 17 is a flow chart illustrating a terminal maintaining synchronization with the network after it has gone to sleep for several access intervals.

Fig. 18 is a flow chart illustrating a terminal maintaining or achieving synchronization with the network after it has gone to sleep for several seconds.

Figs. 19A and 19B are flow charts illustrating an access interval during inbound communication.

Figs. 20A and 20B are flow charts illustrating an access interval during outbound communication.

Fig. 21 illustrates a sequence in an access interval used in the hierarchical communication network of the

present invention with Time Division Multiple Access slots positioned at the end of the access interval.

Fig. 22 illustrates a sequence in an access interval used by the hierarchical network of the present invention with the Time Division Multiple Access slots positioned immediately following the SYNC.

Fig. 23 illustrates a sequence in an access interval used by the hierarchical network of the present invention with the Time Division Multiple Access slots positioned immediately following the SYNC and Reservation Poll.

Fig. 24 illustrates another sequence in an access interval used by the hierarchical network of the present invention with the Time Division Multiple Access slots positioned immediately following the SYNC.

Fig. 25 illustrates a portion of an access interval including the preamble, SYNC and Reservation Poll.

Fig. 26 illustrates the information contained in a sample SYNC message.

Fig. 27 illustrates the information contained in a sample Reservation Poll.

Fig. 28A illustrates a warehouse environment incorporating a communication network which maintains communication connectivity between the various network devices according to the present invention.

Fig. 28B illustrates other features of the present invention in the use of a vehicular LAN which is capable of detaching from the premises LAN when moving out of radio range of the premises LAN to perform a service, and

reattaching to the premises LAN when moving within range to automatically report on the services rendered.

Fig. 28C illustrate other features of the present invention in the use of a vehicular LAN which, when out of range of the premises LAN, is still capable gaining access to the premises LAN via radio WAN communication.

Fig. 29A is a diagrammatic illustration of the use of a peripheral LAN supporting roaming data collection by an operator according to the present invention.

Fig. 29B is a diagrammatic illustration of another embodiment of a peripheral LAN which supports roaming data collection by an operator according to the present invention.

Fig. 30 is a block diagram illustrating the functionality of RF transceivers built in accordance with the present invention.

Fig. 31 is a diagrammatic illustration of an alternate embodiment of the peripheral LAN shown in Fig. 2.

Fig. 32 is a block diagram illustrating a channel access algorithm used by peripheral LAN slave devices in accordance with the present invention.

Fig. 33A is a timing diagram of the protocol used according to the present invention illustrating a typical communication exchange between a peripheral LAN master device having virtually unlimited power resources and a peripheral LAN slave device.

Fig. 33B is a timing diagram of the protocol used according to the present invention illustrating a typical communication exchange between a peripheral LAN master device having limited power resources and a peripheral LAN slave device.

Fig. 33C is also a timing diagram of the protocol used which illustrates a scenario wherein the peripheral LAN master device fails to service the peripheral LAN slave devices.

Fig. 34 is a timing diagram illustrating the peripheral LAN master device's servicing of both the higher power portion of the premises LAN as well as the lower power peripheral LAN subnetwork with a single or plural radio transceivers.

Figs. 35 and 36 are block diagrams illustrating additional power saving features according to the present invention wherein ranging and battery parameters are used to optimally select the appropriate data rate and power level of subsequent transmissions.

Fig. 37 illustrates an exemplary block diagram of a radio unit capable of current participation on multiple LANs according to the present invention.

Fig. 38 illustrates an exemplary functional layout of the frequency generator of Fig. 37 according to one embodiment of the present invention.

Fig. 39 illustrates further detail of the receiver RF processing circuit of Fig. 37 according to one embodiment of the present invention.

Fig. 40 illustrates further detail of the receiver signal processing circuit of Fig. 37 according to one embodiment of the present invention.

Fig. 41 illustrates further detail of the receiver signal processing circuit of Fig. 37 according to another embodiment of the present invention.

Fig. 42 illustrates further detail of the memory unit of Fig. 37 according to one embodiment of the present invention.

Fig. 43 illustrates a software flow chart describing the operation of the control processor in controlling the battery powered radio unit to participate on multiple LANs.

Fig. 44 is an alternate embodiment of the software flow chart wherein the control processor participates on a master LAN and, when needed, on a slave LAN.

Fig. 45 illustrates another embodiment of the communication system of the present invention as adapted for servicing a retail store environment.

Figs. 46a-b illustrate a further embodiment of the communication system of the present invention which illustrate the use of access servers that support local processing and provide both data and program migration.

Fig. 47a is a flow diagram which illustrates the functionality of the access servers of Figs. 46a-b in handling data, processing and direct routing requests.

Fig. 47b is a flow diagram utilized by the access servers of Figs. 46a-b to manage the migration of data

and program code from a source storage and/or processing device toward an end-point device.

Fig. 48 is a schematic diagram of the access servers of Figs. 46a-b illustrating an exemplary circuit layout which supports the functionality described in relation to Figs. 47a-b.

Fig. 49 is a specific exemplary embodiment of an access point in a multi-hop communication network utilized for remote processing of 2-D (two-dimension) code information.

Fig. 50 is a schematic diagram similar to that shown in Fig. 48 which illustrates the circuit layout used in the access point of Fig. 49 to process the 2-D code information.

Figs. 51a-b are flow diagrams illustrating the operation of the 2-D code processing access point of Figs. 49-50.

Fig. 52 illustrates the structuring of 2-D code information so as to support a hierarchical recognition strategy as used by the access point of Figs. 49-50.

Fig. 53 is a diagram illustrating an exemplary 2-D code wherein the hierarchical structure of Fig. 52 is implemented.

Fig. 54 is a flow diagram illustrating the functionality of the access point of Figs. 49-50 in carrying out the hierarchical recognition strategy of Fig. 52.

DETAILED DESCRIPTION OF THE INVENTION

Fig. 1A illustrates a hierarchical communication system 10 within a building in accordance with the present invention. The illustrated hierarchical communication system 10 includes a local area network (LAN) for maintaining typical communication flow within the building premises, herein referred to as a premises LAN. The premises LAN is designed to provide efficient end-to-end routing of information among hardwired and wireless, stationary and roaming devices located within the hierarchical communication system 10.

The premises LAN consists of an infrastructure network comprising radio base stations, i.e., wireless access points 15, and a data base server 16 which may be part of a more extensive, wired LAN (not shown). Herein, base stations which participate in routing and relaying data throughout the communication network are referred to as "access points." If they also participate in the storage or migration of data and program code or in local processing, the base stations are referred to herein as "access servers." As will become apparent below, an access point may be modified with additional circuitry and/or programming resources to become an access server. Additionally, access servers and access points are both referred to herein as "access devices."

The access points 15 may communicate with each other via hard-wired links, such as Ethernet, RS232, etc., or via wireless (radio frequency) links. A plurality of

roaming terminal devices, such as a roaming computing device 20, participate in the premises LAN or the hierarchical communication network 10 to exchange information with: 1) other roaming computing devices; 2) the data base server 16; 3) other devices which might be associated with data base server 16 (not shown); and 4) any other devices accessible via the premises LAN (not shown). A roaming computing device can be, for example, a hand-held computer terminal or vehicle mounted computer terminal (vehicle terminal).

In most circumstances, the premises LAN provides a rather optimal solution to the communication needs of a given network. However, in some circumstances, to serve a variety of particular communication needs, the premises LAN does not offer the optimal solution. Instead of relying on the premises LAN for such communications, when and where beneficial, alternate LANs are spontaneously created by (or with) network devices, such as the roaming computing device 20, within the hierarchical communication system 10. Such spontaneously created LANs are referred to herein as spontaneous LANs. After the immediate benefits end, i.e., a task has been completed, or if the participants of the spontaneous LAN move out of range of each other, the spontaneous LAN terminates operation.

An exemplary spontaneous LAN involves the use of peripheral devices as illustrated in Fig. 1A. Although bulk data transfer destined for a peripheral device 23, such as a printer, from the roaming computing device 20

might be communicated through the premises LAN, a more direct interconnection proves less intrusive, uses power, and offers a lower cost solution. Specifically, instead of communicating through the premise LAN, the roaming computing device 20 needing to print: 1) identifies the presence of an available printer, the peripheral device 23; 2) establishes an RF link (binds) with the peripheral device 23; 3) directly begins transferring the bulk data for printing; and 4) lastly, when the roaming terminal finishes the transfer, the spontaneous LAN with the peripheral device 23 terminates. A spontaneous LAN created between the computing devices and peripheral devices is herein referred to as a peripheral LAN. Other types of spontaneous LANs, such as vehicular LANs, are also possible. Embodiments described below identify vehicular LANs and wide area radio networks (WANs) which are part of the hierarchical communication system according to the present invention.

Although a spontaneous LAN may operate completely independent of the premises LAN, it is more likely that there will be some degree of coordination between the two. For example, while participating in the peripheral LAN, the roaming computing device 20 may terminate participation in the premises LAN, and vice versa. Alternately, the roaming computing device 20 may only service the peripheral LAN when specific participation on the premises LAN is not required, or vice versa. Moreover, the roaming computing device 20 may attempt to

service each peripheral LAN as necessary in a balanced time-sharing fashion, placing little priority upon other LAN. Thus, based on the protocols and hardware selected, a spontaneous LAN can be configured so as to exist hierarchically above, below, at the same level, or independent of the premises LAN.

In generally, to design a given LAN configuration, only the characteristics of that LAN are considered for optimization purposes. However, in the hierarchical communication system of the present invention, the operation of other LANs must also be taken into account. For example, because of the roaming computing devices participation in both the premises and peripheral LANs, the requirements and operation of the premises LAN must be taken into consideration when defining the peripheral LAN, and vice versa. Thus, the hierarchical communication system of the present invention provides a series of tightly coupled radio LANs and WANs with radio transceiver and communication protocol designs which take into consideration such factors as cost, weight, power conservation, channel loading, response times, interference, communication flow, etc., as modified by a primary factor of multiple participation.

The peripheral LAN replaces hard-wired connection between a roaming computing device and associated peripherals. In a typical configuration, a peripheral LAN will consist of one or more peripherals slaved to a single master roaming computing device, although multiple

master roaming computing devices are possible. Peripheral devices may be printers, bar scanners, magnetic card readers, input stylus, etc.

Each of the peripheral devices 22 has a built-in radio transceiver to communicate with the roaming computing devices 20. The roaming computing devices 20 are configured with built-in radio transceivers capable of communicating on both the peripheral and premises LAN. The access points 15 may be configured with radio transceivers only capable of communicating on the premises LAN. In alternate embodiments, as described below, the access points 15 might instead be configured to participate on both the premises and peripheral LANs.

In particular, the peripheral LAN is intended to provide communications between two or more devices operating within near proximity, e.g., distances of a few tens of feet. The majority of constituents of the peripheral LAN are generally devices that do not require access to resources outside their immediate group, or which can suffice with indirect access through devices which participate outside their immediate peripheral LAN group. In contradistinction, the premises LAN is intended to provide communications between relatively many devices operating across great distances throughout a building.

The characteristics of the peripheral LAN permit the use of radio transceivers of lower cost, lower power consumption, and generally more simplistic operation than

permitted by the premises LAN. However, the operation of the peripheral LAN is adapted for integration with the premises LAN so that a radio transceiver and protocol designed for operation on the premises LAN includes features which allow concurrent or sequentially concurrent operation on the peripheral LAN. For example, by selecting similar communication hardware characteristics and integrating protocols, communication within the premises and peripheral LANs may be achieved with a single radio transceiver.

In one embodiment, radio communication through the premises LAN, i.e., among the access points 15 and the roaming computing device 20, utilizes relatively higher-power spread-spectrum frequency-hopping communication with a reservation access protocol. The reservation access protocol facilitates frequency-hopping and supports adaptive data rate selection. Adaptive data rate selection is based upon the quality of communication on the premises LAN radio channel. Radio communication through the peripheral LAN utilizes a relatively lower-power single frequency communication also with a reservation access protocol. As more fully described below, the coordinated use of reservation access protocols in the peripheral and premises LANs maximize information flow while minimizing conflicts between devices participating in the two LANs.

Referring to Fig. 1B, a small hierarchal communication system 30 built in accordance with the

present invention is shown. An access point 33 for roaring or mobile computing devices 35 and 36 forms premises LAN 37. The premises LAN 37 provides for communication among the mobile computing devices 35 and 36 and a host computer 34. The mobile computing devices 35 and 36 can roar anywhere within the range of the access point 33 and still communicate with the host computer 34 via the access point 33.

Two peripheral LANs 40 and 41 allow for wireless communication between each mobile computing device 35 and 36 and its respective peripheral devices 43, 44 and 45 when the mobile computing device is not communicating on the premises LAN 37. Specifically, the peripheral LAN 40 consists of the mobile computing device 35 and the peripheral device 43, while the peripheral LAN 41 consists of the mobile computing device 36 and the two peripheral devices 44 and 45.

Fig. 1C illustrates another embodiment according to the present invention of a larger hierarchal communication system 50. The host computer 55 is connected to access points 56, 57, 58 and 59. The host computer 55 and the access points 56, 57, 58 and 59 provide the infrastructure for the premises LAN. The access points need not be hard-wired together. For example, as illustrated in Fig. 1C, the access points 56, 57 and 58 access each other and the host computer 55 via a hard-wired link, while the access point 59 accomplishes such access via a wireless link with the access point 58.

The access points 56, 58 and 59 support multiple mobile computing devices. For example, the access point 56 uses a frequency-hopping communication protocol for maintaining communication with mobile computing devices 61 and 62. Moreover, each of the mobile computing devices may roam out of range of the access point with which they have been communicating and into the range of an access point with which they will at least temporarily communicate. Together, the host computer 55 and the access points 56, 57, 58 and 59 and mobile computing devices 61, 62, 64, 65 and 66 constitute a premises LAN.

More particularly, each access point operates with a different set of communication parameters. For example, each access point may use a different frequency hopping sequence. Additionally, different access points may not employ a common master clock and will not be synchronized so as to have the frequency hopping sequences start at the same time.

Mobile computing devices 61, 62, 64, 65 and 66 are capable of roaming into the vicinity of any of the access points 56, 58 and 59 and connecting thereto. For example, mobile computing device 62 may roam into the coverage area of access point 58, disconnecting from access point 56 and connecting to access point 58, without losing connectivity with the premises LAN.

Each mobile computing device 61, 62, 64, 65 and 66 also participates with associated peripherals in a peripheral LAN. Each peripheral LAN is made up of the

master device and its slave device. Similarly, as illustrated, the access point 57 is shown as a direct participant in not only the premises LAN but also in the peripheral LAN. The access point 57 may either have limited or full participation in the premises LAN. For example, the access point 57 may be configured as a mobile computing device with the full RF capability of transmission in both the premises and peripheral LANs. Instead, however, participation in the premises LAN may be limited to communicating through the hard-wired link, effectively dedicating the access point 57 to the task of servicing peripherals.

Although the use of a plurality of built-in radio transceivers could be used so as to permit simultaneous participation by a single device, factors of cost, size, power and weight make it desirable to only build-in a single radio transceiver capable of multiple participation. Furthermore, even where a plurality of radio transceivers are built-in, simultaneous participation may not be possible depending upon the potential transmission interference between transceivers. In fact, full simultaneous participation may not be desirable at least from a processing standpoint when one transceiver, servicing one LAN, always or usually takes precedence over the other. Justification for such precedence generally exists in a premises LAN over a peripheral LAN.

For example, communication flow in most premises LANs must be fast, efficient and rather robust when considering the multitude of participants that operate thereon. In the peripheral LAN, however, response times and other transmission related delays are generally more acceptable -- even adding extra seconds to a peripheral printer's print time will usually not bother the user. Thus, in such communication environments, it may be desirable to design the transmitters and associated protocols so that the premises LAN takes precedence over the peripheral LAN. This may yield a communication system where fully simultaneous participation in both the premises and peripheral LANs does not exist.

In communication environments wherein fully simultaneous participation does not exist or is not desired, transmitter circuitry might be shared for participation in both the premises and peripheral LANs. Similarly, in such environments, the communication protocol for the peripheral LAN can be tightly coupled with the protocol for the premises LAN, i.e., integrated protocols, so as to accommodate multiple participation. Moreover, one protocol might be designed to take precedence over the other. For example, the premises LAN protocol might be designed so as to minimize participation or response time in the peripheral LAN. As described in more detail below, such transceiver and protocol analysis also takes place when considering

additional multiple participation in the vehicular LAN and WAN environments.

Fig. 2 illustrates an embodiment of a communication protocol for the premises LAN which uses a basic Access Interval 200 ("AI") structure according to the present invention. Generally, an Access Interval is the basic communication unit, a fixed block of time, that allocates bandwidth to synchronization, media access, polled communications, contention based communications, and scheduled services. The Access Interval in Fig. 2 includes a SYNC header 201 generated by a Control Point ("CP") device of a NET. The term NET describes a group of users of a given hopping sequence or a hopping sequence itself. The Control Point device is generally the access point 15 referenced above with regard to Fig. 1. The SYNC header 201 is used by constituents of the NET to attain and maintain hopping synchronization. A reservation phase 203 follows permitting a reservation poll, which provides the NET constituents an opportunity to gain access to media. A sessions frame 205 is next allocated for communication protocol. A frame 207 follows for optional time division multiple access ("TDMA") slots in order to accommodate scheduled services. Scheduled services, for example, real time voice or slow scan video, are such that they require a dedicated time slot to provide acceptable quality of service. The function of frames 201, 203, 205 and 207 will be discussed in greater detail below.

As was shown in Fig. 2, Fig. 21 illustrates a sequence in an access interval 2100 with the Time Division Multiple Access slots 2113 positioned at the end of the access interval 2100. In present example, if this were also a HELLO interval, the HELLO would immediately follow the SYNC 1201. Location of the Time Division Multiple Access slots at such a position provides certain advantages including, for example, 1) the SYNC 2101, HELLO (not shown), Reservation Poll 2103, may all be combined into a single transmission (concatenated frames); 2) hopping information may be moved to or included in the Reservation Poll 2103 allowing for a shorter preamble in the SYNC 2101; and 3) the HELLO messages will occur early in the Access Interval 2100 providing for shorter receiver on times for sleeping terminals.

The Time Division Multiple Access slots may also be located at different points within the access interval. Positioning the Time Division Multiple Access slots allow for various systemic advantages. Referring now to Fig. 22, an access interval 2200 is illustrated showing the Time Division Multiple Access slots 2203 immediately following the SYNC 2201. Location of the Time Division Multiple Access slots 2203 at this position provides certain advantages including, for example, 1) better timing accuracy is achieved when the Time Division Multiple Access slots 2203 immediately follow the SYNC 2201; 2) Session Overruns do not interfere with the Time

Division Multiple Access slots 2203; 3) devices which do not use the Time Division Multiple Access slots 2203 do not necessarily need to be informed of the Time Division Multiple Access slot allocation; and 4) HELLO message may follow Time Division Multiple Access slots 2203, Reservation Slots 2207 or Reservation Resolution Poll 2209.

Referring now to Fig. 23, an access interval 2300 is illustrated showing the Time Division Multiple Access slots 2305 immediately following the SYNC 2301 and the Reservation Poll 2303. In the present example, if this were a HELLO interval, a HELLO message would immediately follow the Reservation Resolution Poll 2309.

Location of the Time Division Multiple Access slots 2305 at the position shown in Fig. 23 provides certain advantages including, for example, 1) the Time Division Multiple Access slot timing is keyed to SYNC 2301 for better accuracy; 2) the number of Time Division Multiple Access slots 2305 may be indicated in SYNC 2301 or the Reservation Poll 2303, providing greater flexibility; 3) Session frame overruns do not interfere with Time Division Multiple Access slots 2305; 4) only one maintenance transmission is required per Access Interval 2300; and 5) hopping information may be moved to or included in the Reservation Poll 2303, permitting a shorter preamble in SYNC 2301.

In the access interval 2300 configuration shown in Fig. 23, it is possible that the Time Division Multiple

Access slots 2305 and the response slots 2307 could be the same. The Reservation Poll 2303 would allocate the correct number of slots and indicate which are reserved for Time Division Multiple Access. For example, to use Idle Sense Multiple Access 1 slot) with 1 inbound and 1 outbound Time Division Multiple Access slots, three slots would be allocated with the first two slots reserved. The appropriate Time Division Multiple Access slot duration is 80 bits at a hop rate of 200 hops per second which is just about the expected duration of a Request for Poll. At slower hop rates, multiple slots could be allocated to Time Division Multiple Access allowing the Time Division Multiple Access slot duration to be constant regardless of hop rate.

Referring now to Fig. 24, another access interval 2400 is illustrated showing the Time Division Multiple Access slots 2403 immediately following the SYNC 2401. In this example the Poll Message Queue 2405 immediately follows the Time Division Multiple Access slots 2403. The configuration shown in Fig. 24 provides for certain advantages including, for example, 1) the Time Division Multiple Access slot timing is keyed to SYNC 2401 for better accuracy; and 2) Session frame overruns do not interfere with Time Division Multiple Access slots 2403.

The configurations shown in Fig. 21 and in Fig. 23 are preferred because they allow the Reservation Poll messages to be transmitted immediately following the SYNC

and because of the power management and interference reduction advantages.

In one embodiment of the Access Interval structure, all message transmissions use standard high-level data link control ("HDLC") data framing. Each message is delimited by High-Level Data Link Control Flags, consisting of the binary string 01111110, at the beginning of the message. A preamble, consisting of a known data pattern, precedes the initial FLAG. This preamble is used to attain clock and bit synchronization prior to start of data. Receiver antenna selection is also made during the preamble for antenna diversity. A CRC for error detection immediately precedes the ending FLAG. Data is NRZ-I (differentially) encoded to improve data clock recovery. High-Level Data Link Control NRZ-I data is run-length-limited to six consecutive bits of the same state. Alternatively, a shift register scrambler could be applied instead of differential encoding to obtain sufficient transitions for clock recovery. Data frames may be concatenated, with two or more frames sent during the same transmission, with a single FLAG separating them. An example of this is SYNC, followed by a HELLO or Reservation Poll (SYNC, HELLO and Reservation Poll are discussed more fully below).

While much of the following discussion centers on the use of frequency hopping in the premises LAN, the Access Interval structure of the present invention is also suitable for single channel and direct sequence

spread spectrum systems. The consistent timing of channel access, and the relative freedom from collisions due to channel contention, provide desirable benefits in systems that support portable, battery powered devices regardless of modulation type or channelization. Functions that are unique to frequency hopping may be omitted if other channelization approaches are used.

Figs. 3a and 3b illustrate the frequency of operation periodically changing corresponding to Access Interval boundaries in a frequency hopping system. Frequency hopping systems use a hopping sequence, which is a repeating list of frequencies of length (n) selected in a pseudo random order and is known to all devices within a coverage area. Fig. 3a illustrates a frequency hopping system having one Access Interval 301 per frequency hop (the hop occurring every 10 milliseconds) and a length of 79. Fig. 3b illustrates a frequency hopping system having one Access Interval 303 per frequency hop (the hop occurring every 20 milliseconds) and a length of 79. The 20ms time frame is preferred for a protocol stack that uses a maximum network layer frame of up to 1536 bytes payload while maintaining two real time voice communications channels. Access interval duration may be optimized for other conditions. Access Interval length is communicated to the NET during the SYNC portion of the Access Interval. This allows Access Interval duration, and other NET parameters to be

adjusted without reprogramming every device within the NET.

The Access Interval is a building block. The length of the Access Interval can be optimized based on network layer packet size, expected mix of Bandwidth on Demand ("BWOD") and Scheduled Access traffic, expected velocities of devices within the NET, acceptable duration of channel outages, latency or dela for scheduled services, etc. The preferred Access Interval duration of 20ms (and maximum packet length of 256 Bytes at 1 MBIT/sec) represents a value chosen for systems with device velocities up to 15 MPH, and a mix between Bandwidth On Demand and scheduled service traffic.

Within a frequency hopping network, one or more Access Intervals may be used during each dwell in a frequency hopping system. A dwell is the length of time (d) each frequency in the hopping sequence is occupied by the system. For example, Figs. 4a and 4b show illustrations of cases where more than one 20 ms Access Interval 401 is used per hop. This may be appropriate for some instances where it is undesirable to hop at higher rates because of relatively long frequency switching times of the radio hardware, where import, export, or regulatory restrictions disallow hopping at a faster rate, or in some applications where it is desirable to maintain operation on each channel for a longer period. An example of the latter is the case

where larger files or data records are transferred routinely.

In a frequency hopping operation, the Access Interval 200 of Fig. 2 begins with a SYNC header 201. As mentioned above, the SYNC is generated by the Control Point (CP) device of the NET. The SYNC is used by constituents of the NET to attain and maintain hopping synchronization. Included in the SYNC are:

1. Address of the Control Point device.
2. Identification of the Hopping Sequence, and index of the current frequency within the hop table.
3. Identification of the hop rate, number of Access Intervals per hop, and Access Intervals before next hop.
4. A timing character for synchronization of device local clocks to the NET clock contained within the Control Point device.
5. Status field indicating reduced SYNC transmissions due to low NET activity (Priority SYNC Indicator).
6. Status field indicating if the Access Interval will contain a broadcast message to all devices within the NET.
7. Status field indicating premises or spontaneous LAN operation.
8. The SYNC field information is optionally encrypted using a block encryption algorithm, with a key provided by the network user. A random character is added to each SYNC message to provide scrambling.

However, there are two circumstances during which a SYNC message is not transmitted: 1) co-channel interference; and 2) low NET utilization. With regard to co-channel interference, before issuing a SYNC message, the Control Point device performs channel monitoring for

a brief interval. If the Received Signal Strength Indicator (RSSI) level indicates an ON channel signal greater than the system defer threshold, then the Access Interval is skipped. Alternatively, a strong ON channel signal may dictate a reduction in Control Point device power to limit the interference distance of the net for the duration of the Access Interval. A system defer threshold 30 dB above the receiver sensitivity is a preferred choice. Communication within the NET is deferred for the duration of the Access Interval if SYNC is not transmitted due to co-channel interference.

In times of low system utilization, SYNC and Reservation Poll messages are reduced to every third Access Interval. The SYNC message includes a status field indicating this mode of operation. This allows devices to access the NET, even during Access Intervals where SYNC is skipped, by using an Implicit Idle Sense algorithm. If the hopping sequence is 79 frequencies in length as shown in Figs. 3a and 3b, use of every third Access Interval guarantees that a SYNC message will be transmitted on each frequency within the hopping sequence once each three cycles of the sequence, regardless of whether 1, 2 or 4 Access Intervals occur each hop dwell. This addresses US and European regulatory requirements for uniform channel occupancy, and improves the prospects for synchronization of new units coming into the NET during periods when the NET is otherwise inactive. SYNC messages that are on multiples of 3 Access intervals are

labeled as priority SYNC messages. "Sleeping" terminals use priority SYNCs to manage their internal sleep algorithms. Sleeping terminals and Implicit Idle Sense are discussed in more detail below.

It should be noted that SYNC messages are preceded by dead time, which must be allocated to account for timing uncertainty between NET clocks and local clocks within NET constituents. In frequency hopping systems, the dead time must also include frequency switching time for the RF modem.

The Reservation Poll frame 203 immediately follows the SYNC header 201. The two messages are concatenated High-Level Data Link Control frames separated by one or more Flags. The reservation poll provides NET constituents an opportunity to gain access to the media. It includes:

1. A field specifying one or more access slots.
2. A field specifying a probability factor between 0 and 1.
3. A list of addresses for which the access points has pending messages in queue.
4. Allocation of Time Division Multiple Access slots for scheduled services by address.
5. Control Point device Transmitted Power level for SYNC and Reservation Polls.

The number of access slots, n, and the access probability factor, p, are used by the Control Point device to manage contention on the channel. They may each be increased or decreased from Access Interval to

Access Interval to optimize access opportunity versus overhead.

If the NET is lightly loaded, the pending message list is short, and the NET is not subject to significant interference from other nearby NETs, the control point device will generally specify a single slot 501 as shown in Fig. 5a, with a p factor <1. In this case, the reservation phase is Idle Sense Multiple Access ("ISMA"). Devices with transmission requirements that successfully detect the Reservation Poll will transmit a Request for Poll ("RFP", with probability p and defer transmission with probability 1-p. Fig. b shows a device response (address 65 503 following the reservation poll.

In cases when the transmission density is higher, n multiple reservation slots will be specified, generally with a probability factor p of 1. In this case a device will randomly choose one of n slots for transmission of their Request for Poll. The slotted reservation approach is particularly appropriate in instances where many NETs are operating in near proximity, since it diminishes reliance on listen before talk ("LBT") (explained more fully below). The number of slots n is determined by a slot allocation algorithm that allocates additional slots as system loading increases. Fig. 6a shows multiple slots 601.

In cases where NET loading is extreme, the Control Point may indicate a number of slots, e.g., not more than 6, and a probability less than 1. This will cause some

number of devices to defer responding with a Request for Poll in any of the slots. This prevents the control point device from introducing the overhead of a large number of slots in response to heavy demand for communications, by dictating that some units back off until demand diminishes.

A pending message list is included in the Reservation Poll. The pending message list includes the addresses of devices for which the Control Point device has messages in queue. Devices receiving their address may contend for the channel by responding with a Request For Poll (RFP) in the slot response phase. Fig. 6b shows several devices 603, 605 and 607 contending for channel access. Messages that the Control Point device receives through the wired infrastructure that are destined for Type 1 devices, and inactive Type 3 devices whose awake window has expired, are immediately buffered, and the device addresses are added to the pending message list. When a message is received through the infrastructure for a Type 2 device, or an active Type 3 device, their address is prioritized at the top of the polling queue. (Device Types and polling queue are described below.) The pending message list is aged over a period of several seconds. If pending messages are not accessed within this period, they are dropped.

Devices with transmission requirements respond in slots with a Request for Poll. This message type includes the addresses of the Control Point device and

requesting device, the type and length of the message it has to transmit, and a field that identifies the type of device. Devices that detect their address in the pending message list also contend for access in this manner.

As mentioned above, devices may be Type 1, Type 2, or Type 3. Type 1 devices are those which require critical battery management. These may be in a power saving, non-operational mode much of the time, only occasionally "waking" to receive sufficient numbers of SYNC and Reservation Poll messages to maintain connectivity to the NET. Type 2 devices are those that are typically powered up and monitoring the NET at all times. Type 3 units are devices that will remain awake for a window period following their last transmission in anticipation of a response. Other device types employing different power management schemes may be added.

Slot responses are subject to collision in both the single and multiple slot cases. Collisions may occur when two or more devices attempt to send Request for Polls in the same slot. However, if the signal strength of one device is significantly stronger than the others, it is likely to capture the slot, and be serviced as if it were the only responding unit. Fig. 6b shows two devices 605, address 111, and 607, address 02, that may be subject to collision or capture.

The Control Point device may or may not be able to detect collisions by detecting evidence of recovered clock or data in a slot, or by detecting an increase in

RF energy in the receiver (using the Received Signal Strength Indicator, ("RSSI")) corresponding to the slot interval. Collision detection is used in the slot allocation algorithm for determining addition or deletion of slots in upcoming Reservation Polls.

As an optional feature to improve collision detection in the multiple slot case, devices that respond in later slots may transmit the addresses of devices they detect in earlier slots as part of their Request for Poll. Request for Polls which result in collisions at the Control Point device often are captured at other remote devices, since the spatial relationship between devices that created the collision at the base does not exist for other device locations within the NET. The duration of the response slots must be increased slightly to provide this capability.

If the Control Point device receives one or more valid Request for Polls following a Reservation Poll, it issues a Reservation Resolution ("RR") Poll and places the addresses of the identified devices in a polling queue. The Reservation Resolution message also serves as a poll of the first unit in the queue. Addresses from previous Access Intervals and addresses of intended recipients of outbound messages are also in the queue.

If the Polling Queue is empty, then no valid Request for Polls were received or collision detected and no Reservation Resolution poll is issued. If within this scenario a collision is detected, a CLEAR message

indicating an Explicit Idle Sense (explained more fully below) is transmitted containing a reduced probability factor to allow colliding units to immediately reattempt NET access.

Outbound messages obtained through the network infrastructure may result in recipient addresses being prioritized in the queue, that is, if the recipients are active devices -- Type 2 devices or Type 3 devices whose awake window has not expired. This eliminates the need for channel contention for many outbound messages, improving efficiency. Messages for Type 1 devices are buffered, and the recipient address is placed in the pending message list for the next Access Interval.

Generally the queue is polled on a first in first out (FIFO) basis. The polling order is:

a. Addresses of active units with outbound messages.

b. Addresses from previous Access Intervals

c. Addresses from the current Access Interval

Since propagation characteristics vary with time and operating frequency, it is counterproductive to attempt retries if Poll responses are not received. If a response to a Poll is not received, the next address in the queue is polled after a short response time-out period. Addresses of unsuccessful Polls remain in the queue for Polling during the next Access Interval. Addresses are aged, so that after several unsuccessful Polls they are dropped from the queue. Addresses linked

to outbound messages are added to the pending message list. Devices with inbound requirements must re-enter the queue through the next reservation phase.

Data is transferred in fragments. A maximum fragment payload of 256 bytes is used in the preferred implementation. If transfer of network packets larger than of 256 bytes is required, two or more fragments are transferred. Fragments may be any length up to the maximum, eliminating the inefficiency that results when messages that are not integer multiples of the fragment length are transmitted in systems that employ fixed sizes.

The sequence for transferring data from a remote device to the control point device is illustrated in Fig. 7a. It is assumed that address 65 is the first address in the polling queue. The Reservation Resolution poll 701 from the control point device includes the device address and the message length that device 65 provided in its initial Request for Poll. A first fragment 703 transmitted back from device 65 is a full length fragment. Its header includes a fragment identifier and a field providing indication of the total length of the message. Length information is included in most message types during the sessions period to provide reservation information to devices that may wish to attempt to access the NET following an Explicit Idle Sense (explained more fully below).

Following successful receipt of the first fragment, the Control Point device sends a second poll 705, which both acknowledges the first fragment, and initiates transmission of the second. The length parameter is decremented to reflect that the time required for completion of the message transfer is reduced. A second fragment 707 is transmitted in response, and also contains a decremented length field. Following receipt of the second fragment 707, the Control Point device sends a third poll 709. This pattern is continued until a final fragment 711 containing an End of Data (EOD) indication is received. In Fig. 7, the final fragment is shorter than a maximum length fragment. The Control Point device sends a final Acknowledge (ACK), and the device sends a final CLEAR 713 to indicate conclusion of the transmission. The CLEAR message contains a probability factor *p* for Explicit Idle Sense (explained more fully below). The value of *p* is determined by the Control Point device in the ACK and echoed by the device termination communication. A *p* of zero indicates that the control point device will be initiating other communications immediately following receipt of the CLEAR message. A probability other than 0 indicates an Explicit Idle Sense.

If for some reason a fragment is not successfully received, the next poll from the Control Point device would indicate a REJECT, and request re-transmission of the same fragment. The length field would remain fixed

at the previous value, prolonging reservation of the channel for the duration of the message. After a fragment is transmitted more than once without successful reception, the Control Point device may suspend attempts to communicate with the device based upon a retry limit, and begin polling of the next address in the queue.

A flow chart depicting how inbound messages are received during an access interval is shown in Figs. 19A and 19B. A flow chart depicting how outbound messages are transmitted during an access interval is shown in Figs. 20A and 20B.

Outbound messages are transmitted in a similar fashion as inbound messages, with the Control Point and device roles largely reversed as illustrated in Fig. 7b. When the Control Point reaches an address in the queue for which it has an outbound message, the Control Point transmits a Request for Poll 721 identifying the address of the device and the length of the message. The response back from the device would be a poll with an embedded length field. The same POLL/FRAGMENT/ACK/CLEAR structure and retry mechanisms as described above with regard to inbound messages in reference to Fig. 7a are maintained. The CLEAR from the device indicates a probability *p* of zero. If the polling queue is empty, the Control Point may send a final or terminating CLEAR 723 containing a probability for Explicit Idle Sense.

All terminating ACK or CLEAR messages contain fields to aid in synchronization of new units to the NET. The

content of these fields is identical to that in the SYNC message, except that the timing character is deleted. Synchronization is discussed more fully below.

Broadcast Messages intended for groups of addresses, or all addresses within a NET may be transmitted during the sessions period. Broadcast messages are not individually acknowledged. These messages may be communicated at intervals over the course of several Access Intervals to provide reliable communication. Messages such as SYNC and Reservation Polls are specialized broadcast messages, with dedicated bandwidth in the Access Interval structure.

Security of payload data is left to the higher protocol layers. Application programs resident in portable/mobile devices may employ encryption or other means of providing protection against undesired use of transmitted data.

Portable/mobile devices may employ transmitter power control during the sessions period to reduce potential interference with other NETs that may occasionally be on the same or adjacent channels. These devices will use Received Signal Strength Indicator readings from outbound messages to determine if transmitter power may be reduced for their inbound transmission. Because of the need to maintain channel reservations and Listen Before Talk capabilities, the Control Point device does not use transmitter power control. Since Control Point devices are generally part of an installed system infrastructure,

they are likely to be physically separated from devices operating in other NETs. They are therefore less likely to cause interference to devices in other NETs than portable devices, which may operate in proximity to devices in other NETs.

Often, control point devices will empty the polling queue before the conclusion of the access interval. Two mechanisms within the Access Control Protocol, Explicit and Implicit Idle Sense, are provided to improve bandwidth utilization. These supplemental access mechanisms often provide means for devices that failed to gain reservations during the reservation phase to gain access to the NET within the Access Interval. To assume an Explicit or Implicit Idle Sense, a device must have detected a valid SYNC and Reservation Poll in the current Access Interval.

The incorporation of a probability factor $p \neq 0$ in the final (terminating) ACK or CLEAR from the control point device provides the function of an Explicit Idle Sense (mentioned above). Devices with transmission requirements solicit Request for Polls using the same rules normally used for a single slot Reservation Poll. Successfully identified addresses are placed in the polling queue, and are polled immediately or in the next Access Interval depending on the time remaining in the current Access Interval. The p factor for Explicit Idle Sense is subject to the same optimization algorithm as the Reservation Poll probability.

Communication of channel reservations, in the form of the length fields in Polls and Message Fragments is useful to units seeking to access the NET through Explicit Idle Sense. Reservations allow devices to predictably power down during the period that another device has reserved the NET to conserve battery power, without loosing the ability to gain access to the NET.

Implicit Idle Sense provides an additional means of channel access. An Implicit Idle Sense is assumed whenever a device detects a quiet interval period greater than or equal to the duration of a Poll plus the maximum fragment length after a channel reservation has expired. Detection based upon simple physical metrics, such as a change in Received Signal Strength Indicator or lack of receiver clock recovery during the quiet interval, are preferred methods of ascertaining channel activity. Algorithms based upon these types of indicators are generally less likely to provide a false indication of an inactive channel than those that require successful decoding of transmissions to determine channel activity. False invocation of an Implicit Idle Sense is the only mechanism by which data transmissions are subject to collision within the NET. Thus, the Implicit Algorithm must be conservative.

Quiet interval sensing may begin at the following times within the Access Interval:

a. Any time after the last reservation slot following a Reservation Poll;

b. Any time after a terminating ACK or CLEAR indicating an Explicit Idle Sense;

c. Following an unsuccessful response to a single Slot Reservation Poll; or

d. Any time prior to reserved Time Division Multiple Access time slots at the end of the Access Interval.

It is preferable that devices detecting a quiet interval use a *p* persistent algorithm for channel access to avoid collisions. The probability factor for Implicit Idle Sense Access will generally be less than or equal to the factor in Explicit Idle Sense.

A device must receive the SYNC and Reservation Polls at the beginning of an Access Interval to use Implicit Idle Sense. The Reservation Poll provides indication of guaranteed bandwidth allocation to scheduled services at the end of the Access Interval, which may shorten the period available for Bandwidth On Demand communications.

Devices requiring scheduled services must contend for the channel in the same fashion as those requiring Bandwidth On Demand access. When polled, these initiating devices will initiate a connection request that indicates the number of inbound and outbound Time Division Multiple Access slots required for communication, and the address of the target device with which communication is desired. The network infrastructure will then attempt to establish the connection to the target device. Once the connection is established, the Control Point device will signal the allocation of slots to the initiating device. Time

Division Multiple Access slots are relinquished by transmitting a disconnect message to the control point device in the Time Division Multiple Access slot until the disconnect is confirmed in the next Reservation Poll.

The transmission requirements of speech and slow scan video (scheduled services) are similar. In one embodiment, Time Division Multiple Access slots are allocated as multiples of 160 bits payload at 1 MBIT/sec, plus overhead for a total of 300μs. For 10 ms access intervals, acceptable voice communication can be obtained by allocating 1 Time Division Multiple Access slot each for inbound and outbound communication per access interval. For 20 ms access intervals, two slots each way are required. A system employing 10 ms access intervals at 100 hops per second may improve transmission quality by using two or three slots each Access Interval and sending information redundantly over two or three access intervals using interleaved block codes. Scheduled transmissions are generally not subject to processing or validation by the control point device, and are passed through from source to destination. Use of interleaved error correction coding or other measures to improve reliability are transparent to the NET.

The selection of certain system parameters are important when considering scheduled services. As an example, since speech is quantized over the duration of the access interval and transmitted as a burst, the length of the access interval translates directly into a

transport delay perceptible to the recipient of that speech. In real time voice communications, delays longer than 20 ms are perceptible, and delays longer than 30 ms may be unacceptable. This is particularly the case where the premises LAN is interconnected with the public switched telephone network ("PSTN"), which introduces its own delays. Two way services such as voice communications are the most sensitive to transport delay because delay impacts the interaction of the communicating parties. One way services are less sensitive to transport delay. One way services are good candidates for interleaving or other forms of redundant transmission.

Similarly, the selection of hop rate is important, as hop rate determines the duration of outages that may occur. If one or more frequencies in the hop sequence are subject to interference, for instance, scheduled transmissions during those hops will be disrupted. In a system that hops slowly, detrimental outages of hundreds of milliseconds will occur resulting in poor transmission quality. Occasional losses of smaller durations, e.g., 10 ms or 20 ms, are generally less perceptible, indicating that faster hop rates are desirable if the NET is to offer real time voice transport.

Scheduled service intervals may also be used for data transport on a scheduled or priority basis. Telemetry, data logging, print spooling, modem replacement, or other functions are possible. For these

activities, a few Time Division Multiple Access slots scheduled for example every fourth, eighth, or sixteenth AI are necessary.

Because of multipath and dispersion issues with 2.4 GHz transmission at relatively high data rates, the ability of the NET to adaptively switch between two or more data rates is desirable.

In one embodiment, implementation of data rate switching may be accomplished by selecting a standard rate of communications, e.g., 250 KBPS and high rate of communications of 1 Mbit/sec. Messages that contain system status information, including SYNC, Reservation Polls, Reservation Resolution Polls (Request for Polls), Polls, ACKs and CLEARS are transmitted at the standard rate. These messages are generally short, and the time required for transmission is largely determined by hardware overhead, e.g., transmitter receiver switching time. The incremental overhead introduced by transmitting these messages at the lower rate is therefore small in comparison to the total length of an access interval. The reliability of reception of these messages will increase, which will eliminate unnecessary retries in some instances where fragments are received successfully, but acknowledgements or polls are missed.

A test pattern at the higher data rate is inserted in each Poll (not in Reservation Polls, however). The Poll recipient evaluates signal quality based on the high data rate test pattern, Received Signal Strength

Indicator, and other parameters to determine whether to transmit a fragment at the high rate or the low rate. Fragment lengths are selected such that high and low rate maximum fragment lengths are the same duration. In other words, a fragment at the low rate conveys approximately 1/4 the payload of a fragment for the case where the data rate is four time greater. This method is generally suitable for transaction oriented communications, which frequently require short message transmissions. Alternatively, the length field in Polls and messages can be used to allow different fragment lengths for the two data rates while still providing channel reservation information to other devices in the NET. This method also provides for forward migration. As modulation and demodulation methods improve, newer products can be added to old networks by upgrading Control Points devices. Both new and old devices share the ability to communicate at a common low data rate.

An alternate embodiment uses signaling messages such as SYNC, Reservation Polls, Request for Polls, etc., at the higher rate with fallback operation to the standard rate for the communications sessions only. SYNC and Reservation Polls at the high rate constitute a high data rate test message. The Request for Poll response to the Reservation Poll at the high rate may include a field indicating that sessions communications should take place at the fallback, standard rate. Signal quality measures such as signal strength and clock jitter are appropriate.

Data rate selection information is included with the device address in the polling queue. When the device is polled, it will be polled at the rate indicated in the Request for Poll. Channel reservation information in the Reservation Resolution Poll will indicate the reservation duration based upon the data rate indicated.

In this alternate embodiment, the fact that SYNC and Reservation Polls must be detectable at the high data rate prioritizes access to the NET for those devices that have acceptable connectivity during the current access interval. This general approach has desirable characteristics in a frequency hopping system, as the propagation characteristics between devices may change significantly as the NET changes from frequency to frequency within the hopping sequence, or over several Access Intervals during the dwell time on a single frequency. Reduction in data rate in this system is primarily intended to remedy the data smearing (inter-symbol interference) effects of dispersion due to excess delay, rather than temporary poor signal to noise ratio due to frequency selective fading. Devices that receive high data rate transmissions with acceptable signal strength but high jitter are likely to be experiencing the effect of dispersion.

The concept of allowing Polls and message fragments to occur at either a high or low data rate could create difficulties for other NET constituents that need to be able to monitor the channel for reservation information.

Two embodiments for solving this problem are the use of auto-discriminating receivers or the use of fixed data rate headers for system communications.

Auto discrimination requires the receiver to process messages sent at either data rate, without necessarily having prior knowledge of the rate.

Given a high rate of 1 MBIT/SEC, and a low Rate of 250 KBPS, i.e., one being a binary multiple of the other, it is possible to devise preambles that can be received at either rate. Consider that 01 and 110 sent at the low rate correspond to 00001111 and 111111110000 at the high rate. These preambles are transmitted continuously before the transmission of the High-Level Data Link Control FLAG character at the correct data rate indicating the start of a message. In this example, a preamble of 20 bits of 01 at the low rate indicates operation at the high rate. A preamble of 30 bits of 110 indicates operation at the low rate. A receiver tuned to either rate is capable of receiving both types of preambles and initiating the proper decoding mechanisms for the intended rate of transmission.

This general technique, with appropriate selection of preamble content, is applicable to binary modulation schemes, for example, a frequency modulated system where a common frequency deviation value is used for both data rates. It is also applicable to systems where switching occurs between binary and multilevel modulation, such as

disclosed in pending U.S. Application Ser. No. 07/910,865, filed July 6, 1992.

Referring now to Fig. 25, a preamble 2501, a SYNC 2503 and a Reservation Poll 2505 is illustrated. The preamble 2501 starts at the beginning of the Access Interval 2500 and is applied to an RF modem while it is switching frequencies. Since the switching time is a worst case, this causes the preamble 2501 to be present and detectable prior to the allocated 150μsec period in some instances. It would be equally appropriate to begin preamble transmission 50 or 100 μsec into the switching period if that would be more convenient. The timing has been selected to allow 100 μsec.

Referring to Fig. 26, a sample SYNC message 2600 is shown. Referring to Fig. 27, a sample Reservation Poll 2700 is shown. In these examples, the hopping synchronization information has been positioned in the Reservation Poll 2700.

With auto-discrimination, it is possible to change data rates on a per-poll basis, thereby adjusting for channel temporal dynamics. Since all devices in the NET have auto discrimination capabilities, and channel reservation information is included in message headers as a length field, the bandwidth reservation features of the NET are preserved. The maximum fragment duration may be maintained at a fixed value, meaning that low data rate fragments convey less data than their high rate

counterparts, or may be scaled in the ratio of the data rates to allow consistent fragment data payloads.

An alternative to auto-discrimination is the use of headers to communicate system information. This embodiment is less preferred, but may be appropriate if economics, size, or power constraints dictate a simpler design than that required for auto-discrimination. In this embodiment, any transmission at the lower data rate is preceded by a header at the high data rate that conveys NET management information, i.e., channel reservation status. Devices other than those directly involved in polling or fragment transmission need only monitor at the high rate for channel reservation information. The header at the high rate and the following transmission at the low rate are concatenated *High-Level Data Link Control* frames, with an appropriate preamble for low rate clock recovery synchronization in-between.

For the communicating devices, the header can serve the additional purpose of acting as a test pattern at the high rate. For example, if a device is polled at the low rate, but successfully decodes the high rate header with adequate signal quality, it may indicate back to the polling unit to poll again at the high rate.

In a premises LAN as discussed in reference to Fig. 1, many NETs may be distributed geographically to provide enhanced coverage or additional system capacity. The wired portion of the network infrastructure, such as

Ethernet or Token Ring, provides a means for coordination of NETs to achieve optimum system performance. An equally important role of the wired infrastructure is to allow resource sharing. Portable devices with limited memory capacities, processing power, and relatively small batteries may access large data bases on, or remotely initiate processing capabilities of, larger AC powered computer systems. Portable/mobile devices may also share communication with other like devices which are serviced by other NETs well beyond the radio coverage range of their own NET.

The basic method for communication of status information regarding the premises LAN is the HELLO message. HELLO messages are sent routinely, but relatively infrequently, for example, every 90 Access Intervals. The HELLO transmission interval is tied to the Priority SYNC interval, so that the HELLO interval corresponds to Access Intervals where SYNC is transmitted if the network is lightly utilized.

In an alternate embodiment, HELLOs could be inserted as a broadcast message at the beginning of the Sessions period. Fig. 8 illustrates a preferred Access Interval embodiment where a HELLO message 801 is inserted between a SYNC 803 and a Reservation Poll 805. The SYNC frame at the beginning of the Access Interval indicates that the Access Interval will contain a HELLO, allowing power managed devices to remain awake to receive the HELLO.

HELLO messages may also contain information regarding pending changes in the local NET. If the local NET is changing Access Interval durations or hop sequences, for instance, changes may be communicated in several consecutive HELLOs so that the information is reliably communicated to all NET constituents, permitting all devices to make the change in coordinated fashion. Further discussion of HELLO message content is provided below.

For purposes of channel management in the Access Interval structure, the maximum transmission duration by a device should be limited to the time that the device moving at a maximum expected velocity can traverse 1/4 wavelength of the maximum carrier frequency. The duration may be further reduced to compensate for link bit error rate characteristics or expected duration or frequency of interference bursts. A maximum transmission duration of 2.5 ms is suitable for 1 MBIT/SEC transmission, with a device velocity of 15 mph, in a multiple NET environment.

Use of spatial or polarization antenna selection diversity is also desirable in indoor propagation environments. First, the receiving unit makes an antenna diversity decision during the preamble portion of each transmission. The antenna used for reception for each device address is then recorded in memory so that the correct antenna will be used for response messages to each address. While diversity selection is only valid

for a short time, it is not necessary to age this information, because antenna selection is equi-probable even after diversity information is no longer valid.

The Access Interval structure of the present invention also inherently provides routine channel sounding for each hop. This is important in a frequency hopping system, as channel conditions will vary considerably from frequency to frequency within the hopping sequence. NET constituents must, in most cases, be able to receive SYNC and Reservation Poll transmissions from the Control Point device to attempt inbound access in an Access Interval. This provides a positive indication that the device is not experiencing a channel outage, allowing power saving and eliminating possible channel contention. Channel sounding does not need to be employed during periods where the NET is not busy since contention is unlikely in this situation.

Channel sounding for Outbound messages is accomplished through a Request for Poll/Poll cycle where handshaking messages with short time out periods must be successfully communicated before longer message transmissions may be attempted.

As discussed above with regard to Fig. 1, a premises LAN consists of several access points 15 located throughout an environment requiring wireless communications, e.g., a building or other facility, or a campus comprised of several buildings. The access points 15 are placed to provide coverage of intended usage areas

for the roaming portable or mobile computing devices 20. Coverage areas must overlap to eliminate dead spots between coverage areas.

The access points 15 may be interconnected via industry standard wired LANs, such as IEEE 802.3 Ethernet, or IEEE 802.5 Token Ring. Access points may be added to an existing LAN without the need to install additional LAN cable. Alternatively, it may be desirable to install access points on dedicated LAN segments to maximize performance of both the radio network and other collocated computer devices.

Access points within the premises LAN provide Control Point functions for individual NETs. NETs employ different hopping sequences to minimize potential interference between NETs. Regulatory restrictions generally preclude synchronization of multiple NETs to a single master clock, requiring that individual NETs operate independently from one another. The lack of the ability to coordinate timing or frequency usage between NETs introduces the potential for collisions between independent NETs with overlapping coverage areas.

Figs. 9a and b illustrate conceptually how multiple NETs may be employed in an idealized "cellular" type installation. Each hexagon 901 and 903 in Fig. 9a represents the primary coverage area of a given NET. Coverage areas are modeled as circles 905 based upon some reliability criterion, for example a 5% mean fragment retry rate (on average 95% of fragments are successfully

communicated on the first attempt,. Typical coverage areas are determined by physical attributes of the area in which the NET operates. As is illustrated in Fig. b for the hexagon (NET) 903 of Fig. 9a, an actual coverage area 907 meeting the reliability criterion is likely to be irregular. This may require access points to be offset significantly from the hexagonal grid.

Fig. 10 illustrates a coverage contour overlap for the multiple NETs in the premises LAN of Fig. 1. Darken shaded areas 1001 indicate areas where access point coverage overlaps. Because the coverage distance of a radio system on an instantaneous basis greatly exceeds the coverage that can be provided on average to sustain a given quality of service, the overlap at any instant may be significantly greater than the coverage contours indicate.

Fig. 11 illustrates hopping sequence reuse in a multiple NET configuration. Hopping sequence re-use may be necessary if there are physical constraints on the number of hopping sequences that can be supported. For example, devices may have limited memory available for hopping sequence storage. Use of a smaller set of sequences also simplifies the task of determining sets of sequences that have acceptable cross correlation properties. In Fig. 12, 7 hopping sequences 1 through 7 are used throughout the coverage area. Other NETs may reuse the same hopping sequence at some distance removed. While 7 NETs are illustrated, larger numbers, such as 9

or 15 may provide a better compromise between minimizing the number of hopping sequences used, and reuse distance between NETs using the same sequence. Reuse requires coordination of hopping sequence assignment -- either the system installer can coordinate the installation, or the system may include automated management features to assign hopping sequences to individual NETs.

Since NETs are not synchronized, different NETs that use the same hopping sequence are likely to interfere during periods where oscillator drift causes them to be temporarily synchronized. At other times, they may only interfere due to imperfect channelization. For example, for a worst case 100 ppm frequency error between two NETs using the same 79 frequency sequence at one Access Interval per hop and 50 hops per second, NETs will partially or fully overlap for a duration of 10 minutes every 4.3 hours. Typically the frequency error will be 25% to 50% of the worst case, leading to longer overlap periods occurring less frequently.

NETs using the same hopping sequence must be physically isolated from one another to reduce interference to an acceptable level. Extensive hopping sequence reuse generally requires site engineering and optimization of access point placement. Using more hopping sequences reduces the need for critical system engineering during installation. Fifteen hopping sequences is a preferred number for hopping sequence

reuse, allowing simplified installation and minimal coordination.

NETs that use different hopping sequences will also temporarily synchronize in timing relationships that cause mutual co-channel interference on common channel frequencies. Since the number of channels that must be used in a sequence is a significant fraction of the total number of channels available, all sequences will share some number of frequencies in common. When sequences are time aligned so that a common frequency is used simultaneously, interference can occur. Optimization of sets of sequences for low cross correlation is necessary to prevent various time alignments of sequences from having more than one or two frequencies in common.

Optimization of hopping sequences for multiple NETs must also include analysis of imperfect channelization. The performance characteristics of the RF modems may not, for economic or power consumption reasons, provide sufficient transmitter spectral containment, receiver dynamic range, or receiver selectivity to guarantee that devices operating on different frequencies in proximity to one another will not interfere. In selecting hopping sequences for desirable cross correlation properties, adjacent and alternate adjacent channel interference must be considered. Protocol retry mechanisms for fragments lost to adjacent channel interference or limited dynamic range may be randomized to prevent continued disruption of communications in the affected NET.

Often in campus environments where systems must provide coverage in several buildings, the cost of wiring LAN cable between access points is prohibitive. To establish connectivity between access points in an premises LAN, it may be necessary to provide wireless links between groups of access points connected to separate LAN segments. Fig. 12 illustrates a wireless link 1201 connecting groups of access points 1203 and 1205. The access points 1203 and 1205 are connected on separate LAN segments 1207 and 1209.

In one embodiment, the access points 1203 and 1205 may be configured in a wireless point to point mode, wherein one access point serves as a control point device while the others operate in a slaved mode dedicated to point to point data transfer. Slave access points are configured to operate as portable/mobile devices, and forward communications to master bases by sending Request for Polls during reservation opportunities or Implicit Idle Sense periods. Because of the potential high traffic of point to point links, separate NETs may be allocated for this purpose, with a master communicating with one or more slave units. Master units may also communicate with other portable/mobile devices. The COST weighing (discussed below) in a slave's HELLO transmission is preferably set to a high value, to force portable/mobile devices which can connect to another NET to do so.

In another embodiment, it may also be desirable to support wireless access points. Wireless access points serve as control points, but are not connected to the infrastructure through a LAN cable. As is illustrated in Fig. 13, a wireless access point 1301 participates in the premises LAN through a wireless link 1303 to an access point 1305 that is connected to a LAN 1307.

Wireless access points operate as slave devices to master access points which are connected to the wired infrastructure. The wired and wireless access points share the same hopping sequence, and are synchronized as a common NET. Because they are not connected to the Infrastructure, wireless access points must be used as store and forward devices. Each transmission to a wireless base must be retransmitted to the intended destination device, doubling the number of transmissions occurring in the NET. Wireless access points are preferably used for supplementing coverage area of the premises LAN. For example, a wireless access point might provide spot coverage of isolated "dead spots" where data traffic is limited or where providing a wired LAN connection is difficult. Wireless access points may also serve as emergency spares to provide coverage in the event of a failure of a primary access point. In this role, the wireless access point may be either permanently installed in selected locations, or stored in a maintenance area and quickly positioned and connected to AC or battery power to provide communications while

repairs are made to the primary wired access point. Moreover, permanently installed wireless access points might also be used for redundancy, i.e., to monitor an associated access point and to take over when a break-down is detected.

The preferred wireless access point embodiment uses interleaved access intervals. The parent wired access point and secondary wireless access point coordinate Access Intervals, the wired access point deferring every third or sixth access interval to the wireless base. Since the wired access point transmits priority SYNC messages every third Access Interval, the wireless access point may routinely be allocated one of the two intervening Access Intervals for priority SYNC communications with devices that are attached to it. Communication between the wired and wireless access points may occur during Access Intervals initiated by either access point. Wireless access points may also communicate with devices during an Access Interval using Implicit or Explicit Idle Sense.

This embodiment provides predictable access for devices attached to the wireless NET, and allows the same power management algorithms to be used regardless of whether the access point is wired or wireless. The wireless access point may transmit its own priority SYNC and HELLO messages. Also, devices seeking communications with the wireless access point will automatically be synchronized with the wired base as well, allowing

immediate improved access to the network if their mobility has put them within range of the wired base.

Because of the constraint of sharing bandwidth with a wired access point, connectivity of wireless access points is normally limited to one per wired access point. However, in cases where system loading is predictably and consistently light, multiple wireless access points could share a single wired base, e.g., each transmitting in turn in the Access Intervals between the Wired Base Priority SYNC Access Intervals.

Wireless access points are capable of supporting scheduled traffic. However, since each transmission to a wireless access point must be forwarded, scheduled transmissions through wireless access points use twice the bandwidth as those through wired access points. In other words, twice the number of Time Division Multiple Access slots must be allocated. To avoid introducing excessive delay, communications must be forwarded during the same Access Interval that they are received, or shorter Access Intervals must be used. Scheduled traffic slot assignments must be common to all wireless bases operating within a single NET.

Wireless access points require reliable communication with their wired counterparts. This dictates smaller coverage contours for wireless access points. If a wired access point provides 80,000 square feet of coverage area, a wireless base can be predicted to provide only an additional forty percent coverage

improvement, due to overlap with the wired access point. Frequently, access points are mounted at ceiling level, providing a relatively clearer transmission path between access points than exists between bases and portable/mobile devices located in more obstructed areas near the floor. With careful site engineering and installation, a wireless access point can provide somewhat better than the forty percent predicted improvement, but still less than the coverage of an additional wired base.

As discussed above, HELLO messages are used to communicate NET and premises LAN status messages. They facilitate load leveling and roaming within the premises LAN and allow sequence maintenance to improve security and performance within the NET. HELLO messages occur periodically in Access Intervals that contain priority SYNC messages. HELLOs are sent periodically relative to the sequence length, for instance, every 90 Access Intervals. HELLOs, like SYNC information, are optionally encrypted to provide greater security.

Each HELLO message includes a field for COST. COST is a measure of the access point to handle additional traffic. A device determining which of two or more access points having adequate signal strength to register which will select the base with the lowest COST factor.

The base computes COST on the basis of how many devices are attached to the NET, the degree of bandwidth utilization, whether the base is wired or wireless, the

number of frequencies experiencing consistent interference within the sequence, and the quality of the connection the base has within the premises LAN.

Fig. 14 illustrates the concept of access points communicating neighboring access point information through HELLO messages to facilitate roaming of portable/mobile devices. In a premises LAN, access points 1401, 1403 and 1405 communicate SYNC information amongst themselves via wired backbone (LAN) 1407. In addition, a wireless access point 1409 (discussed above) similarly communicates with the access points 1401, 1403 and 1405 via a wireless link 1411. A portable/mobile device 1413 is initially registered with access point 1401, which acts as a control point for the portable/mobile device 1413. HELLO messages transmitted by access point 1401 to portable/mobile device 1413 contain fields for neighboring access points 1403, 1405 and 1409. These fields may indicate, for example, addresses of the neighboring bases, their COST, the hopping sequences, hopping sequence indices, number of Access Intervals per hop, and NET clock. The portable/mobile device 1413 detects the HELLOs transmitted from access point 1401 and uses the information for coarse synchronization with the other access points 1403, 1405 and 1409. This permits the portable/mobile device to roam between access point coverage areas (i.e., between different NETs) without going through a full acquisition phase. Roaming of

portable/mobile devices is discussed in more detail below.

Simply put, communication of neighbors' information permits each access point to advise its associated portable/mobile devices (i.e., those having common communication parameters) on how to capture HELLO messages from neighboring access points having different communication parameters. Such communication parameters may include, for example, hopping sequences, spreading codes, or channel frequencies.

For example, neighbors' information transmission is appropriate in any case where the system uses more than a single channel. For instance, in a direct sequence architecture, a single spreading code is often used. Capacity can be added to such a network by employing different spreading codes at each access point. The neighbors' information included in the HELLO message from a given access point would include the spreading sequences of access points providing coverage in adjacent coverage areas. Likewise, in a multiple frequency channelized system, HELLO messages would include the channel frequencies of adjacent access points.

In addition to facilitating roaming, communication of neighbors' information may also facilitate the initial selection of an access point by a portable/mobile device attaching to the premises LAN for the first time.

Access point HELLO messages may also facilitate adaptive access point transmitter power control. For

example, each access point HELLO transmission could specify the transmitter power level being used by the access point. If a given attached portable/mobile device notes that the current access point transmitter power level is unnecessarily high (creating the possibility of interference with other access points), the portable/mobile unit could send a message to the access point indicating as such, and the access point could adjust the transmitter power level accordingly.

HELLO messages also enable communication of information indicating to all devices that certain changes in the NET are required. For example, the NET may switch hopping sequences periodically to improve security, or to avoid interference sources that consistently interfere with one or two frequencies within a given sequence. Interference may result from outside sources, or from other NETs. Changes to the NET are communicated over the course of several HELLO messages (with a countdown) before the change occurs, so that all devices are likely to be aware of changes and synchronize at the instant of change.

In addition, if encryption is used, the encryption key may be periodically changed in HELLOs. Like hopping sequence changes, KEY changes are sent over several HELLOs, and are encrypted using the existing key until the change goes into effect.

As mentioned above, roaming portable and mobile computing devices operating in the premises LAN will

routinely move between access point coverage areas. At the maximum device velocity and expected coverage area per access point, a mobile device may be expected to cross a NET coverage contour in several seconds. Because of the use of multiple, non-synchronized frequency hopping NETs, it is more difficult to provide for simple hand-off between access points than it would be in a system that used cellular techniques with a single frequency per cell. The premises LAN makes special provisions for roaming by transmitting coarse frequency hopping synchronization information in HELLO messages.

The premises LAN uses a spanning tree algorithm to maintain current information regarding the general location of mobile devices within the network. When a device changes registration from one NET Control Point to another, routing information is updated throughout the infrastructure. Wired access points may broadcast spanning tree updates to attached wireless access points.

In the premises LAN, roaming portable and mobile devices initially select and register with an access point Control Point on the basis of link quality, i.e., signal quality, signal strength and COST information transmitted within HELLO messages. A device will remain attached to a particular access point until the link quality degrades below an acceptable level, then it will attempt to determine if an alternative NET is available. Different device operating scenarios dictate different roaming strategies, discussed below.

An idle device monitors SYNC and HELLO messages from the Control Point device to maintain NET connectivity. Type 2 devices do not employ power management, and always maintain their receivers in an active state. They monitor all SYNC messages. Type 1 and Type 3 devices typically employ power management, operating in standby or sleep modes of operation for many Access Intervals before activating their receivers for monitoring SYNC and HELLO messages. Control Points are guaranteed to send Priority SYNC frames every third Access Interval. HELLOs occur every 30th Priority SYNC frame. Power managed devices employ sleep algorithms synchronized to wake for the minimum period necessary to guarantee receipt of priority SYNC, HELLO, and Pending Message transmissions before resuming SLEEP.

Type 2 devices are typically operated from high capacity vehicular power systems, which eliminates the need for power management. These devices may travel at velocities near the maximum system design specification, dictating more frequent roaming. Type 2 devices will initiate a search for an alternative NET if SYNC messages are consistently received at signal strengths below a Roaming Threshold or if reception errors are consistently detected. Because of the effects of frequency selective fading, signal strength information is averaged over the course of several hops within the hopping sequence.

If roaming is indicated, the device initiates a Roaming Algorithm, using Neighbors' information from the

most recent HELLO to attempt synchronization with another candidate NET. If SYNC is not detected within 6 hops, another candidate from the Neighbors list will be selected, and the process repeated. Once SYNC is attained on an alternative NET, the device will monitor signal strength and data errors for several hops to determine link quality. If link quality is acceptable, the device will continue monitoring until a HELLO is received. If COST is acceptable, it will then register with the new NET. The Control Point device will update the spanning tree over the wired backbone (or by RF if a wireless base). If link quality or COST is unacceptable, another candidate from the Neighbors list is selected and the process repeated. This continues until an acceptable connection is established. If a connection cannot be established, the device must return to the original NET or employ the initial acquisition algorithm.

Type 2 devices also have the option of monitoring other NETs before degradation of their NET connection. They may do so by monitoring their own NET for the SYNC and pending message list transmissions, then scanning other candidate NETs during the Sessions period of their NET. Other type devices may do so less frequently.

Type 1 and Type 3 devices may sleep extensively when idle, preferably activating every nine Access Intervals to resynchronize and check pending messages. Successful reception of at least one SYNC during three monitoring periods is necessary to maintain fine synchronization to

the NET clock. Failure to receive two of three SYNC frames, or receipt of two or three SYNC messages with poor signal strength are possible indications of the need to further test link quality by remaining active for several consecutive SYNC transmissions. If signal strength or data errors over several hops indicates that link quality is poor, or if a received HELLO message indicates high COST, the roaming algorithm is initiated, and alternative NETs are evaluated, in the case of Type 2 devices.

Some battery powered devices may sleep for periods of time more than nine Access Intervals. For example, devices with extremely limited battery capacity may sleep between HELLOs, or several HELLO periods, after which they must remain active for several consecutive Access Intervals to regain fine synchronization and assess whether to initiate roaming.

A Type 1, Type 2, or Type 3 device that has inbound message requirements immediately activates its receiver and waits for a SYNC and subsequent Reservation Opportunities. A device that does not detect SYNC messages over the course of six Access Intervals immediately initiates the Roaming Algorithm.

Outbound messages for devices that have changed coverage areas, but which have not yet registered with a new Control Point device, are problematic. For example, in the premises LAN, messages will be forwarded to the access point that the device had previously been attached

to. The access point may attempt to poll the device during one or more Access Intervals, then transmit the unit address in the pending message list periodically for several seconds before disregarding it. Once the unit attaches to a base, the message must be transferred from the previous access point for delivery to the unit. All of these activities require transmission bandwidth on either the backbone or RF media, waste processing resources within the premise LAN, and result in delayed delivery.

As this premises LAN embodiment is designed, the network has no means of distinguishing messages it cannot deliver due to roaming from messages that should be retried due to signal propagation characteristics, interference, or sleeping devices. For this reason, the roaming algorithm may be designed to allow devices to quickly detect that they have lost connectivity within their current NET, and re-attach to a more favorably located access point.

Some improvement in delivering pending messages to roaming terminals can be obtained by routinely propagating pending message lists over the wired backbone. When a device attaches to an access point, that base is able to immediately ascertain that the device has a pending message, and initiate forwarding of the message for delivery to the device.

In the preferred frequency hopping embodiment of the present invention, the hopping sequence consists of $3m \pm$

1 frequencies, where m is an integer. 79 frequencies are preferred. This embodiment will support hopping rates of 100, 50 hops per second at 1 Access Interval per dwell, 25 hops per second at 2 frames per dwell, and 12.5 hops per second at 4 frames per dwell. Other rates can be supported for other Access Interval Durations. For example, if the Access Interval is optimized to 25 ms, hop rates of 80, 40, 20, and 10 hops per second would be supported.

All devices within the NET may have one or more hopping tables that contain potential hopping sequences that may be used. Up to 64 sequences may be stored in each device. Each sequence has an identifier, and each frequency in each sequence has an index. The sequence identifier and index are communicated in the SYNC transmission.

All SYNC transmissions may be block encrypted to prevent unauthorized devices from readily acquiring hopping synchronization information. To facilitate encryption, the encryption key may initially be factory set to a universal value in all devices. Users would then have the option of changing this key, by providing a new key to each device in the system. This may be accomplished through keyboard entry or other secure means. Keys may also be changed through the NET.

To facilitate hopping management, a hopping control portion of a protocol controller will download a hopping table to a radio modem, and will signal the radio modem

when to hop. This approach consolidates timing functions in the protocol controller, while not requiring the controller to be concerned with conveying frequency selection data to the modem each hop.

The NET may switch hopping sequences periodically to improve security, or to avoid interference sources that consistently interfere with one or two frequencies within a given sequence. As mentioned above, changes to the NET are communicated over the course of several HELLO messages before the change occurs so that all devices are likely to be aware of changes.

Initial synchronization requires devices to ascertain the hopping sequence, the hop rate, and the specific frequency from the hopping sequence currently in use. Synchronization information is contained in two types of routine messages. The SYNC field at the beginning of an Access Interval contains synchronization information including the hopping sequence, the index of the current frequency within the sequence, the number of Access Intervals per hop, and the length of the Access Interval. It also contains a timing character that communicates the NET master clock to all listening devices. Termination messages in the Sessions period, ACK and CLEAR, contain the same information, but do not contain the timing character.

The simplest method for attaining synchronization is to *Camp* -- select a quiet frequency that is likely to be within a sequence in use -- and listen for valid

synchronization information. If a SYNC message is detected, the listening device immediately has both coarse and fine synchronization, and can begin the registration process.

If SYNC is not detected, but a termination message is, then the device has acquired coarse synchronization. The particulars of the hopping sequence are known, but the boundaries of the dwells are not. To acquire fine synchronization, it begins hopping at the indicated hopping rate, listening for SYNC. If SYNC is not detected after a reasonable number of hops, preferably 12 or 15, the device reverts to camping.

The worst case scenario for synchronization is to synchronize to a single NET that is idle. Given a 79 frequency hopping sequence, one Access Interval per hop, and SYNC transmissions every third Access Interval if the NET is idle, it may take nine cycle times to guarantee that a SYNC transmission will be detected with 99.5% probability. At 50 hops per second, synchronization could require as long as 14 seconds. At 100 hops per second, 7 seconds is required.

At 2 Access Intervals per hop, a SYNC transmission is guaranteed to occur every frequency over 2 cycles of the hopping sequence. Six cycles are required for 99.5% probability of acquisition, corresponding to 19 seconds at 25 hops per second.

At 4 Access Intervals per hop, at least one SYNC is guaranteed to occur each hop. Three cycles of the

hopping sequence are required for 99.5% acquisition probability. At 12.5 hops per second, this also requires 19 seconds.

This illustrates the advantage of scalability. A device that uses an acquisition algorithm suitable for 2 or 4 Access Intervals per hop will also acquire a NET that hops at 1 Access Interval per hop. The algorithm may be as follows:

1. The device scans candidate frequencies until it finds one with no Received Signal Strength Indicator indication.

2. The device remains on the frequency for 6.32 seconds 2 Access Interval/hop @ 25 Hops/second x 2, or 4 Access Interval/hop @ 12.5 hops/second x 1, or until it detects a SYNC message or a valid termination message.

3. If SYNC is detected, the device synchronizes its internal clock to the SYNC, and begins hopping with the NET for the next 11 hops. It may attempt registration after detecting valid SYNC and any Reservation Opportunity. If synchronization is not verified by detection of SYNC within the 11 hops, the acquisition algorithm is reinitialized.

4. If a message termination (either an ACK or CLEAR) is detected, the device immediately hops to the next frequency in the sequence and waits for the SYNC. It is coarsely synchronized to the NET but has a timing offset from the NET clock.

When the next SYNC is received, the device synchronizes its clock to the NET clock and initiates registration. If SYNC is not received within a dwell time, the device hops to the next frequency in sequence. This continues until SYNC is attained, or until 15 hops have passed without receiving SYNC, after which the acquisition sequence is restarted.

5. If coarse acquisition is not obtained within 6.3 seconds, the device selects another frequency and repeats the process beginning with step 2.

Camping provides a worst case acquisition performance that is perceptibly slow to the human user of a portable device. The preferred approach has the receiver scan all potential frequencies in ascending order, at 125 μsec increments. When the highest frequency is reached, the search begins again at the lowest frequency. The 125μs sampling rate is much faster than the 250 μsec channel switching time specification of the RF modem. This is possible because the overall switching time specification applies to worst case frequency switching intervals, i.e., from the highest to the lowest operating frequency. By switching a single channel at a time, switching may be maintained over frequency intervals very near a synthesizer phase detectors' phase lock range, allowing nearly instantaneous frequency switching. The change from highest to lowest frequency at the end of the scan requires the standard 250 μsec.

The 125 μsec monitoring interval allows 85μs to ascertain if receive clock has been detected prior to switching to the next frequency. The monitoring interval should be selected to be non-periodic with respect to the access interval. For example, the 125 μsec interval allows the entire hopping sequence to be scanned 2(n + 1) times in a 20 ms access interval.

If clock is recovered at any frequency, the receiver remains on frequency for a Reservation Opportunity and initiates channel access through the procedure described above. The scanning approach is less deterministic in terms of acquisition probability than camping, but the search time required for 99.5% acquisition probability is about 80 Access Intervals, or three times faster than that for camping.

A hybrid approach that scans only three or four consecutive frequencies incorporates the deterministic aspects of camping with some of the improved performance of the scanning algorithm. For scanning over a small number of frequencies an up/down scan is preferred, i.e., 1,2,3,2,1,2,3 since all frequency changes can be accomplished at the faster switching rate. The end frequencies are visited less often than those in the center. The number of frequencies used, e.g., 3 or 4, is selected so that all can be scanned during the preamble duration of a minimum length transmission.

All devices are required to have unique 48 bit global addresses. Local 16 bit addresses will be assigned for reduced overhead in communications. Local addresses will not be assigned to devices whose global addresses are not on an authentication list maintained in each access point and routinely updated over the infrastructure.

Once a device has attained synchronization, it must register with the control point to be connected with the

NET. It initiates this by sending a Request for I.D. indicating a registration request, and including its global address. The control point will register the device, and provide a short. Network Address as an outbound message. The Control point will generate the short address if it is a single NET, or exchange the global address for a short Network Address with a Network Address Server if the NET is part of a larger infrastructured network of a premises LAN.

Once a device is synchronized to a NET, it must periodically update its local clock to the NET clock communicated in the SYNC message. The SYNC message contains a character designated as the SYNC character that transfers the NET clock synchronization. This may be the beginning or ending FLAG in the SYNC message, or a specific character within the message.

The maximum expected frequency error between NET and device local clocks is 100 parts per million. To maintain a 50 μs maximum clock error, the local device clock must be re-synchronized at 500 ms intervals. At 20 ms per access interval, a non-sleeping device has up to 26 SYNC opportunities within that period in which to re-synchronize and maintain required accuracy.

As mentioned above, it is desirable that battery powered devices have the capability to *sleep*, or power off, for extended periods of time to conserve power. The term sleeping terminal in this instance may refer to a device that powers down its radio communication hardware

to save power while maintaining other functions in an operational state, or a device that power manages those functions as well. In the power managed state, the device must maintain its hop clock so that full acquisition is not required every time power management is invoked.

Devices that must sleep to manage their power consumption use *Priority SYNC Messages* to maintain synchronization. Priority SYNC Messages occur every three Access Intervals. In times of low NET activity, non-priority SYNC messages are omitted. By coordinating power management with Priority SYNC Messages, power managed devices can be guaranteed to wake up for Access Intervals where SYNCs will be present, even if the NET activity is low during the sleep period.

A sleeping device with no transmission requirements may sleep for eight 20 ms access intervals, and wake only for the SYNC and Reservation Poll at the beginning of the ninth Access Interval to monitor pending messages before returning to the sleep state, for a duty cycle of less than 5%. This provides three opportunities to synchronize to the NET clock within a 540 ms window. A flow chart depicting the a device sleeping for several access intervals is shown in Fig. 17.

Devices may also sleep for longer periods of time, at the risk of losing fine synchronization. They may compensate by advancing their local clocks to account for the maximum timing uncertainty. For example, a terminal

could sleep for seconds without re-synchronizing by waking up 500 microseconds before it expects an Access Interval to begin, and successfully receive SYNC messages. This technique is valid for extended periods of time, up to the point where the maximum timing error approaches 50% of an Access Interval. A flow chart depicting the a device sleeping for several seconds is shown in Fig. 18.

A power managed device that requires communication during a sleep period may immediately wake and attempt access to the NET at the next available Reservation Opportunity.

A device requiring communications may be able to register with one of several NETs operating in its vicinity, with transmissions occurring on many frequencies simultaneously. A good strategy is to synchronize to a NET that provides an acceptable communication link, then monitor HELLO messages to determine other candidate NETs before attaching to a particular NET by registering with the control point device.

As described above, a spontaneous wireless local area network or spontaneous LAN is one that is established for a limited time for a specific purpose, and which does not use the premises LAN to facilitate communications between devices or provide access to outside resources. Use of spontaneous LAN allows portable devices to share information, files, data, etc.,

in environments where communication via the premises LAN is not economically justifiable or physically possible. A spontaneous LAN capability also allows portable mobile devices to have an equally portable network. Peripheral and vehicular LANs are examples of such spontaneous LANs.

Requirements for spontaneous LAN differ from an infrastructured premises LAN in several significant areas. The number of devices in a spontaneous LAN is likely to be smaller than the number that a single NET in a premises LAN must be capable of supporting. In addition, coverage areas for spontaneous LANs are typically smaller than coverage areas for an access point participating in the premises LAN. In a spontaneous LAN, communication often takes place over relatively short distances, where devices are within line of sight of each other.

In an premises LAN, the majority of communications are likely to involve accessing communication network resources. For example, portable devices with limited processing capabilities, memory, and power supplies are able to access large databases or powerful computing engines connected to the AC power grid. Access points within the premises LAN are well suited to the role of Control Points for managing synchronization and media access within each NET.

In a spontaneous LAN, however, communications are limited to exchanges with spontaneous NET constituents. Additionally, NET constituents may potentially leave at

any time, making it difficult to assign control point responsibilities to a single device. A shared mechanism for synchronization and media access is preferable in most cases.

In a spontaneous LAN, battery power limitations may preclude assignment of a single device as a control point. The routine transmission of SYNC and access control messages places a significant power drain on a portable, battery powered device. Also, the control point architecture dictates that transmissions intended for devices other than the control point be stored and forwarded to the destination device, further increasing battery drain, and reducing system throughput.

Moreover, the use of scheduled transmission in a premises LAN is likely to differ from use in a spontaneous LAN. For example, unlike the premises LAN, in the spontaneous LAN, applications such as massaging and two way voice communications may only occasionally be used, whereas video transmission and telemetry exchange may be prevalent.

To promote compatibility and integration with the premises LAN, operational differences required by multiple participating devices should be minimized. For example, selecting relatively close frequency bands for each LAN aids in the design of a multiple LAN transceiver, reducing circuitry, cost, power, weight and size while increasing reliability. Similarly, selecting communication protocols so that the spontaneous LAN

protocol constitutes a subset or superset of premises LAN may enable a given device to more effectively communication in both LANs, while minimizing both the overall protocol complexity and potentially limited memory and processing power.

Use of frequency hopping is desirable in premises LAN because of its ability to mitigate the effects of interference and frequency selective fading. In the case of the latter, frequency hopping allows systems to be installed with less fade margin than single frequency systems with otherwise identical radio modem characteristics, providing improved coverage.

The potentially smaller coverage area requirement of spontaneous LANs, however, allows single frequency operation to be considered for some applications, e.g., such as a peripheral LAN. Regulatory structures are in place in some countries to allow single frequency operation in the same bands as frequency hopping systems, providing that single frequency devices operate at reduced power levels. The lower transmit power of single frequency operation and elimination of periodic channel switching are desirable methods of reducing battery drain. The choice of single frequency or frequency hopped operation is dictated by the coverage requirements of the network, and may be left as an option to device users.

As noted earlier, the basic Access Interval structure is suited to single frequency operation as well

as to frequency hopping. SYNC messages in a single frequency system substitute a single frequency indication in the hopping sequence identifier field.

A spontaneous LAN comes into existence when two or more devices establish communications, and ceases when its population falls to less than two. Before a spontaneous LAN can be established, at least two devices must agree upon a set of operating parameters for the network. Such agreement may be pre-programmed else exchanged and acknowledged prior to establishing the spontaneous LAN. Once the spontaneous LAN is established, other devices coming into the network must be able to obtain the operating parameters and acquire access.

More specifically, to establish a spontaneous LAN, a computing device must first identify at least one other network device with which spontaneous LAN communication is desired. To identify another network device, the computing device may play an active or passive role. In an active role, the computing device periodically broadcasts a request to form spontaneous LAN with either a specific network device or, more likely, with a specific type of network device. If a network device fitting the description of the request happens to be in range or happens into range and is available, it responds to the periodic requests to bind with the computing device, establishing the spontaneous LAN. Alternately, the network device may take a passive role in

establishing the spontaneous LAN. In a passive role, the computing device merely listens for a request to form a spontaneous LAN transmitted by the appropriate network device. Once such a network device comes into range, the computing device responds to bind with the network device, establishing the spontaneous LAN.

The choice of whether a device should take a passive or active role is a matter of design choice. For example, in one embodiment where peripheral devices have access to AC power, the roaming computer terminals take a passive role, while the peripheral devices take a more active role. Similarly, in another embodiment where a venicle terminal has access to a relatively larger battery source, an active role is taken when attempting to form a spontaneous LAN, i.e., a vehicular LAN, with a hand-held computing device.

Binding, a process carried out pursuant to a binding protocol stored in each network device, may be a very simple process such as might exist when creating a spontaneous LANs that operates on a single frequency channel. Under such a scenario, a simple acknowledge handshake between the computing terminal and the other network device may be sufficient to establish a spontaneous LAN pursuant to commonly stored, pre-programmed operating parameters. However, more complex binding schemes may also be implemented so as to support correspondingly more complex spontaneous LANs as proves

necessary. An example of a more complex binding scheme is described below.

It is desirable in some large spontaneous LANs for one device to be designated as a fully functional control point, providing identical NET operation to a single NET in the premises LAN. Providing that all devices share a hopping table and encryption key, the designated device would initiate control point activities, and other devices would synchronize to the designated unit. A device with greater battery capacity, or one that can be temporarily connected to AC power is best suited to the dedicated control point function. This architecture is applicable to *Client-Server* applications (where the server assumes the control point function), or to other applications where a single device is the predominant source or destination of communications. A portable device used as a dedicated control point is required to have additional programming and memory capacity to manage reservation based media access, pending message lists, and scheduled service slot allocations.

In embodiments where communication requirements of a spontaneous LAN are largely peer to peer, there may be no overwhelming candidate for a dedicated Control Point. Thus, in such cases, the Control Point function is either distributed among some or all the devices within the spontaneous LAN. In such scenarios, the interleaved Access Interval approach used for wireless access points is employed. Initially, control point responsibilities

are determined during the binding process. User may designate or redesignate a Control Point device when several candidates are available.

For spontaneous LANs, access intervals may be simplified to reduce power consumption, program storage and processing power requirements for portable devices used as control points. Control Point devices transmit SYNC, pending message lists, and Time Division Multiple Access slot reservations normally, but only use the single slot reservation Poll (Idle Sense Multiple Access). The reservation poll contains a field indicating reduced control point functionality. This places other devices in a point-to-point communication mode, using the Implicit Idle Sense Algorithm. The probability factor *p* communicated in the reservation poll is used for the Implicit Idle Sense algorithm. Control point devices may use the deferred SYNC mechanism for light system loading, transmitting Priority SYNC every third Access Interval to further decrease their transmission requirements. Control point devices must monitor the reservation slot for messages addressed to them, but may sleep afterwards.

Request for Polls initiated under Implicit Idle Sense use point-to-point addressing, indicating the address of the destination device directly, rather than the control point device. This eliminates the need for the Control Point device to store and forward transmissions within the spontaneous LAN. The device

detecting its address in a Request for Poll begins a session, after employing the Implicit Idle Sense algorithm, by Polling the source address identified in the Request for Poll. The terminating ACK and CLEAR messages contain an Explicit Idle Sense probability factor equal to that in the original reservation poll.

To allow for power managed devices, the Control Point device maintains a pending message list. Devices that have been unable to establish communication with a sleeping device initiate a session with the Control Point device to register the pending message. Upon becoming active, the sleeping device will initiate a Poll to the device originating the pending message. The Control Point device will eliminate the pending message indication by aging, or by receipt of communication from the destination device clearing the pending message. Control point devices are not required to store pending messages, only addresses.

As mentioned above, HELLO messages are broadcast to indicate changes in NET parameters. HELLO messages may be omitted to simplify the Control Point function in spontaneous LANs.

Devices are assigned local addresses upon registration with the Control Point device. Devices may communicate an alias that identifies the device user to other users to the Control Point device where it is stored in an address table. The address table may be obtained by other network constituents by querying the

Control Point device. A peripheral LAN is a type of spontaneous LAN which serves as a short range interconnect between a portable or mobile computing device (MCD) and peripheral devices.

Designers of portable products are constantly challenged with reducing size, weight, and power consumption of these devices, while at the same time increasing their functionality and improving user ergonomics. Functions that may be used infrequently, or which are too large to fit within the constraints of good ergonomic design may be provided in peripheral devices, including printers, measurement and data acquisition units, optical scanners, etc. When cabled or otherwise physically connected to a portable product, these peripherals often encumber the user, preventing freedom of movement or mobility. This becomes more problematic when use of more than one peripheral is required.

A second consideration for portable product design is communication docking. A communication dock is a device that holsters or houses a portable unit, and provides for communication interconnection for such tasks as program downloading, data uploading, or communication with large printers, such as those used for printing full sized invoices in vehicular applications. Communication docking of a portable unit may also involve power supply sharing and/or charging.

The requirement for communication docking capability forces newer portable product designs to be mechanically

compatible with older docking schemes, or may require that new docks, or adapters, be developed for each new generation of portable device. Product specific docking approaches eliminate compatibility between devices manufactured by different suppliers. This has hindered development of uniform standards for Electronic Data Interchange between portable devices and fixed computing systems.

Physical connection between a portable device with a peripheral or communication dock also hinders user efficiency. Peripheral devices are generally attached with cable. If a peripheral is small enough to be carried or worn on a belt, the mobility of the user may be maintained. If a user must carry a hand-held portable device that is connected to a belt mounted peripheral the assembly cannot be set down while a task that requires movement to a location several feet away is undertaken unless the portable device and peripheral are disconnected. Likewise, connection to peripherals too large to be portable requires the user to frequently connect and disconnect the device and the peripheral.

Use of wireless peripheral LAN interconnection greatly simplifies the task of portable devices communicating with peripherals. In doing so, wireless connectivity allows improved ergonomics in portable product design, flexibility in interconnection to one or more peripherals, freedom of movement over a radius of operation, forward and backward compatibility between

portable units and peripherals, and potential communications among products manufactured by different vendors.

Constituents within a peripheral LAN generally number six or fewer devices. One roaming computing device and one or two peripherals comprise a typical configuration. Operating range is typically less than fifty feet.

Because the computing devices generally control the operation of peripheral devices, in a peripheral LAN a master/slave type protocol is appropriate. Moreover, roaming computing devices serving as master are well suited to the role of Control Points for managing synchronization and media access within each peripheral LAN. All peripheral communications are slaved to the master.

In a peripheral LAN, roaming mobile or portable computing devices and wireless peripherals may all operate from battery power. Operating cycles between charging dictate use of power management techniques.

Although all participants in a peripheral LAN might also be configured to directly participate in the premises LAN, the trade-offs in cost, power usage and added complexity often times weighs against such configuration. Even so, participants within a peripheral LAN can be expected to function in a hierarchical manner, through a multiple participating device, with the premises LAN. Thus, the use of a much simpler, lower-

power transceiver and associated protocol may be used in the peripheral LAN.

As previously described, a roaming computing device serving as a master device may itself be simultaneously attempting to participate in other networks such as the premises or vehicular LANs. Considerable benefits arise if the radio and processing hardware that supports operation within the wireless network can also support such operation. For example, a device that is capable of frequency hopping is inherently suited to single frequency operation. If it can adjust transmitter power level and data rate to be compatible with the requirements of the peripherals LAN, it can function in both systems. The major benefits of common transceiver hardware across LANs include smaller product size, improved ergonomics, and lower cost.

Specifically, in one embodiment, radio communication on the premises LAN, as described herein, takes place using radio transceivers capable of performing frequency-hopping. To communicate on a peripheral LAN, such transceivers could also utilize frequency-hopping at a lower power. However, such transceivers are relatively expensive in comparison to a lower power, narrow-band, single frequency transceivers. Because of the cost differential, it proves desirable to use the single frequency transceivers for all peripheral devices which will not participate in the premises LAN. Therefore, the more expensive, frequency-hopping transceivers which are

fitted into roaming computing devices are further designed to stop hopping and lock into the frequency of the single frequency transceiver, allowing the establishment of peripheral LANs.

Instead of frequency hopping, the peripheral LAN may also use narrow-band, single frequency communication, further simplifying the radio transceiver design for commonality. In another embodiment of the peripheral LAN transceivers, operation using one of a plurality of single frequency channels is provided. Thus, to overcome interference on one channel, the transceiver might select from the remaining of the plurality an alternate, single operating frequency with lesser channel interference. To accommodate the plurality of single frequency channels, the peripheral LAN transceivers may either communicate an upcoming frequency change so that corresponding peripheral LAN participants can also change frequency, or the transceivers may be configured to use frequency synthesis techniques to determine which of the plurality a current transmission happens to be.

The Access Interval structure is also an appropriate choice for peripheral LAN operations. In one embodiment, to provide for simplicity and tighter integration, the Access Interval for the peripheral LAN is a subset of the Access Interval used in the premises LAN. HELLO messages, Implicit Idle Sense, Data Rate Switching, and scheduled services are not implemented. Peripheral devices normally sleep, activate their receivers for SYNC

transmissions from the participating master device, and resume sleeping if no pending messages are indicated and they have no inbound transmission requirements. Access Intervals occur at regular intervals, allowing for power management. Access Intervals may be skipped if the master has other priority tasks to complete.

To initialize the peripheral LAN, a device desiring initialization, a master device, selects a single operating frequency by scanning the available frequencies for one with no activity. A typical master device might be a roaming computing device desiring access to a local peripheral. Default values for other parameters, including Access Interval duration, are contained within each participant's memory. Such parameters may be pre-adjusted in each participant to yield specific performance characteristics in the peripheral LAN.

Once a master device identifies a single frequency, slaves, which are generally peripherals, are brought into the peripheral LAN through a process called binding. Binding is initiated by the master device by invoking a binding program contained therein. Slaves, such as peripherals, are generally programmed to enter a receptive state when idle. Thus, in one embodiment, the master device accomplishes binding by transmitting Access Intervals of known duration sequentially on a series of four frequencies spread throughout the available frequency range. The specific frequencies and Access Interval durations used are stored as parameters in all

potential participating devices. A 250 KBPS transfer rate is appropriate in some embodiments of the peripheral LAN, reflecting a balance between performance and complexity in peripheral devices.

A slave, e.g., a peripheral, responds to the binding attempts by the master device on a given frequency until the slave successfully receives and establishes communication with the master device. If they do not establish communication after four Access Intervals, the slave switches to the next frequency for four Access Interval periods. Once communication is established, the slave registers with the master and obtains the master device's selected operating frequency and related communication parameters. When all slave devices have been bound, the master terminates the binding program and normal operation at the selected single frequency may begin.

Referring to Fig. 15, in a hierarchical network, peripheral LAN masters use a secondary access interval 1501 that is synchronized to the Access Interval of a parent (premises) LAN control point. Peripheral LAN Access Intervals occur less frequently than premises LAN Access Intervals, e.g., every other or every third Priority SYNC Access Interval.

During the premises LAN Access Interval, the peripheral LAN master device monitors the premises LAN control point for SYNC 1503 reservation poll 1505 and exchanges inbound and outbound message according to the

normal rules of the access protocol. The master switches to the peripheral LAN frequency, and transmits its own SYNC frame 1507 during the session period 1509 of its parent control point allowing communication with its peripherals. The peripheral LAN Access Interval is generally shorter than the premises LAN Access Interval, so that it does not extend beyond the premises LAN Access Interval boundary. At the end of the peripneral LAN Access Interval 1501, the master switches to the premises LAN frequency for the next SYNC 1503.

The secondary SYNC 1507 may only be transmitted if the peripheral LAN master is not busy communicating through the premises LAN. If a communication session is occurring, the master must defer SYNC, preventing communication with its peripherals during that Access Interval. The master must also defer SYNC if the current frequency in the LAN is prone to interference from the peripheral LAN frequency, i.e., they are the same frequency or adjacent frequencies. If two consecutive SYNCs are deferred, peripherals will activate their receivers continuously for a period of time, allowing the master to transmit during any Access Interval. This approach is also applicable when the master roams between frequency hopping NETs. Since NETs are not synchronized to one another, the devices in the peripheral LAN adjust Access Interval boundaries each time the master roams. If peripherals do not detect SYNC within a time-out

period, they may duty cycle their reception to conserve battery power.

Referring to Fig. 16, a Roaming Algorithm Flow Diagram illustrates how a roaming computing device will select a suitable access point. Roaming computing devices operating in the infrastructured network environment formed by the access points will routinely move between access point coverage areas. The roaming computing devices are able to disconnect from their current access point communication link and reconnect a communication link to a different access point, as necessitated by device roaming.

Access points transmit HELLO messages to devices in their coverage area. These HELLO messages communicate to roaming computing devices the cost of connection through the access point, addresses of neighboring access points, and the cost of connection through these neighboring access points. This information allows roaming computing devices to determine the lowest cost connection available and to connect to the access point with the lowest cost.

In addition, access point HELLO message may include communication parameters of neighboring access points, such as frequency hopping sequences and indices, spread spectrum spreading codes, or FM carrier channel frequencies. This information allows roaming computing devices to roam and change access point connections without going through a full acquisition phase of the new access point's parameters.

Roaming computing devices initially select and register with an access point control point on the basis of link quality: signal strength and cost information transmitted within HELLO messages. A device will remain attached to a particular access point until the link quality degrades below an acceptable level; then it will attempt to determine if an alternative access point connection is available. The device initiates a roaming algorithm, using neighbors information from the most recent HELLO message to attempt connection with another candidate access point. If connection fails, another candidate from the neighbors list will be selected, and the process repeated. Once connection is made with an alternative access point, the device will monitor signal strength and data errors to determine link quality. If link quality is acceptable, the device will continue monitoring until a HELLO message is received. If the cost is acceptable, it will register with the new access point, and the access point will update the spanning tree over the infrastructure. If link quality or cost is unacceptable, another candidate from the neighbors list is selected and the process repeated. This continues until an acceptable connection is established. If one cannot be established, the device must return to the original access point connection or employ the initial acquisition algorithm.

Fig. 28a illustrates an embodiment of the hierarchical communication system according to the

present invention communication is maintained in a warehouse environment. Specifically, a worker utilizes a roaming computing device, a computer terminal 3007, and a code reader 3009 to collect data such as identifying numbers or codes on warehoused goods, such as the box 3010. As the numbers and codes are collected, they are forwarded through the network to a host computer 3011 for storage and cross-referencing. In addition, the host computer 3011 may, for example, forward cross-referenced information relating to the collected numbers or codes back through the network for display on the terminal 3007 or for printing on a printer 3013. The host computer 3011 can be configured as a file server to perform such functions. Similarly, the collected information may be printed from the computer terminal 3007 directly on the printer 3013. Other exemplary communication pathways supported include message exchanges between the computer terminal 3007 and other computer terminals (not shown) or the host computer 3011.

The host computer 3011 provides the terminal 3007 with remote database storage, access and processing. However, the terminal 3007 also provides for local processing within its architecture to minimize the need to access the remote host computer 3011. For example, the terminal 3007 may store a local database for local processing. Similarly, the terminal 3007 may run a variety of application programs which never, occasionally or often need access to the remote host computer 3011.

Many of the devices found in the illustrative network are battery powered and therefore must conservatively utilize their radio transceivers. For example, the hand-held computer terminal 3007 receives its power from either an enclosed battery or a forklift battery (not shown) via a communication dock within the forklift 3014. Similarly, the code reader 3009 operates on portable battery power as may the printer 3013. The arrangement of the communication network, communication protocols used, and data rate and power level adjustments help to optimize battery conservation without substantially degrading network performance.

In the illustrated embodiment shown in Fig. 28a, the hierarchical communication system of the present invention consists of a premises LAN covering a building or group of buildings. The premises LAN in the illustrated embodiment includes a hard-wired backbone LAN 3019 and access points 3015 and 3017. A host computer 3011 and any other non-mobile network device located in the vicinity of the backbone LAN 3019 can be directly attached to the backbone LAN 3019. However, mobile devices and remotely located devices must maintain connectivity to the backbone LAN 3019 through either a single access point such as the access point 3015, or through a multi-hop network of access points such as is illustrated by the access points 3015 and 3017. The access points 3015 and 3017 contain a relatively higher power transmitter, and provide coverage over the entire

warehouse floor. Although a single access point may be sufficient, if the warehouse is too large or contains interfering physical barriers, the multi-hop plurality of access points 3017 may be desirable. Otherwise, the backbone LAN 3019 must be extended to connect all of the access points 3017 directly to provide sufficient radio coverage. Through the premises LAN, relatively stable, longer range wireless and hard-wired communication is maintained.

Because roaming computing devices, such as the hand-held computer terminal 3007, cannot be directly hard-wired to the backbone LAN 3019, they are fitted with RF transceivers. To guarantee that such a network device can directly communicate on the premises LAN with at least one of the access points 3015 and 3017, the fitted transceiver is selected to yield approximately the same transmission power as do the access points 3015 and 3017. However, not all roaming network devices require a direct RF link to the access points 3015 and 3017, and some may not require any link at all. Instead, with such devices, communication exchange is generally localized to a small area and, as such, only requires the use of relatively lower power, short range transceivers. The devices which participate in such localized, shorter range communication form spontaneous LANs.

For example, the desire by a roaming terminal to access peripheral devices such as the printer 3013 and modem 3023, results in the roaming terminal establishing

a peripheral LAN with the peripheral devices. Similarly, a peripheral LAN might be established when needed to maintain local communication between a code scanner 3009 and the terminal 3007. In an exemplary embodiment, the printer 3013 are located in a warehouse dock with the sole assignment of printing out forms based on the code information gathered from boxes delivered to the dock. In particular, as soon as the code reader gathers information, it relays the information along a peripheral LAN to the terminal 3007. Upon receipt, the terminal 3007 communicates via the premises LAN to the host computer 3011 to gather related information regarding a given box. Upon receipt of the related information, the terminal 3007 determines that printing is desired with the printer 3013 located at the dock. When the forklift 3014 enters the vicinity of the dock, the terminal 3007 establishes a peripheral LAN with the printer 3013 which begins printing the collected code information.

To carry out the previous communication exchange, the printer 3013 and code reader 3009 are fitted with a lower power peripheral LAN transceivers for short range communication. The computer terminal 3007 transceiver is not only capable of peripheral LAN communication, but also with the capability of maintaining premises LAN communication. In an alternate exchange however, the code reader 3009 might be configured to participate on both LANs, so that the code reader 3009 participates in the premises LAN to request associated code information

from the host computer 3011. In such a configuration, either the code reader 3009 or terminal 3007 could act as the control point of the peripheral LAN. Alternately, both could share the task.

With capability to participate in the peripheral LAN only, the code reader 3009, or any other peripheral LAN participant, might still gain access to the premises LAN indirectly through the terminal 3007 acting as a relaying device. For example, to reach the host computer 3011, the code reader 3009 first transmits to the computer terminal 3007 via the peripheral LAN. Upon receipt, the computer terminal 3007 relays the transmission to one of the access points 3015 and 3017 for forwarding to the host 3011. Communication from the host 3011 to the code reader 3009 is accomplished via the same pathway.

It is also possible for any two devices with no access to the premises LAN to communicate to each other. For example, the modem 3023 could receive data and directly transmit it for printing to the printer 3013 via a peripheral LAN established between the two. Similarly, the code reader 3009 might choose to directly communicate code signals through a peripheral LAN to other network devices via the modem 3023.

In an alternate configuration, a peripheral LAN access point 3021 is provided which may be directly connected to the backbone LAN 3019 (as shown), acting as a direct access point to the backbone LAN 3019, or indirectly connected via the access points 3015 and 3017.

The peripheral LAN access point 3021 is positioned in the vicinity of other peripheral LAN devices and thereafter becomes a control point participant. Thus, peripheral LAN communication flowing to or from the premises LAN avoids high power radio transmissions altogether. However, it can be appreciated that a stationary peripheral LAN access point may not always be an option when all of the peripheral LAN participants are mobile. In such cases, a high power transmission to reach the premises LAN may be required.

Fig. 28b illustrates other features of the present invention in the use of spontaneous LANs in association with a vehicle which illustrate the capability of automatically establishing a premises and a peripheral LAN when moving in and out of range to perform services and report on services rendered. In particular, like the forklift 3014 of Fig. 28a, a delivery truck 3033 provides a focal point for a spontaneous LAN utilization. Within the truck 3033, a storage terminal 3031 is docked so as to draw power from the truck 3033's battery supply. Similarly, a computer terminal 3007 may either be docked or ported. Because of greater battery access, the storage terminal 3031 need only be configured for multiple participation in the premises, peripheral and vehicular LANs and in a radio WAN, such as RAM Mobile Data, CDPD, MTEL, ARDIS, satellite communication, etc. The storage terminal 3031, although also capable of

premises and peripheral LAN participation, need only be configured for vehicular LAN participation.

Prior to making a delivery, the truck enters a docking area for loading. As goods are loaded into the truck, the information regarding the goods is down-loaded into the storage terminal 3031 via the terminal 3007 or code reader 3009 (Fig. 28a) via the premises or peripheral LAN communications. This loading might also be accomplished automatically as the forklift 3014 comes into range of the delivery truck 3033, establishes or joins the peripheral LAN, and transmits the previously collected data as described above in relation to Fig 28a. Alternately, loading might also be accomplished via the premises LAN.

As information regarding a good is received and stored, the storage terminal 3031 might also request further information regarding any or all of the goods via the peripheral LAN's link to the host computer 3011 through the premises LAN. More likely however, the storage terminal 3031 if appropriately configured would participate on the premises LAN to communicate directly with the host computer 3011 to retrieve such information.

The peripheral LAN access point 3021 if located on the dock could provide a direct low power peripheral LAN connection to the backbone LAN 3019 and to the host computer 3011. Specifically, in one embodiment, the access point 3021 is located on the dock and comprises a low power ("short hop") radio operating in a frequency

hopping mode over a 902-928MHz frequency band. However, the access point 3021 can instead be configured to communicate using, for example, infrared, UHF, 2.4GHz or 902MHz spread spectrum direct sequence frequencies.

Once fully loaded and prior to leaving the dock, the storage device 3031 may generate a printout of the information relating to the loaded goods via a peripheral LAN established with the printer 3013 on the dock. In addition, the information may be transmitted via the peripheral LAN modem 3023 to a given destination site.

As illustrated in Fig. 28c, once the storage terminal 3031 and hand-held terminal 3007 moves out of range of the premises and peripheral LANs, i.e., the truck 3033 drives away from the dock, the vehicular LAN can only gain access to the premises LAN via the more costly radio WAN communication. Thus, although the storage terminal 3031 might only be configured with relaying control point functionality, to minimize radio WAN communication, the storage terminal 3031 can be configured to store relatively large amounts of information and to provide processing power. Thus, the terminal 3007 can access such information and processing power without having to access devices on the premises LAN via the radio WAN.

Upon reaching the destination, the storage terminal 3031 may participate in any in range peripheral and premises LAN at the delivery site dock. Specifically, as specific goods are unloaded, they are scanned for

delivery verification, preventing delivery of unwanted goods. The driver is also informed if goods that should have been delivered are still in the truck. As this process takes place, a report can also be generated via a peripheral or premises LAN printer at the destination dock for receipt signature. Similarly, the peripheral LAN modem on the destination dock can relay the delivery information back to the host computer 3011 for billing information or gather additional information needed, avoiding use of the radio WAN.

If the truck 3033 is used for service purposes, the truck 3033 leaves the dock in the morning with the addresses and directions of the service destinations, technical manuals, and service notes which have been selectively downloaded from the host computer 3011 via either the premises or peripheral LAN to the storage terminal 3031 which may be configured with a hard drive and substantial processing power. Upon pulling out of range, the storage terminal 3031 and the computer terminal 3007 automatically form an independent, detached vehicular LAN. Alternately, the terminals 3007 and 3031 may have previously formed the vehicular LAN before leaving dock. In one embodiment, the vehicular LAN operates using frequency hopping protocol much the same as that of the premises LAN, with the storage terminal 3031 acting much like the premises LAN access points. Thus, the radio transceiver circuitry for the premises LAN participation may also be used for the vehicular LAN

and, as detailed above, a peripheral LAN. Similarly, if the radio WAN chosen has similar characteristics, it may to be incorporated into a single radio transceiver.

At each service address, the driver collects information using the terminal 3007 either as the data is collected, if within vehicular LAN transmission range of the storage terminal 3031, or as soon as the terminal 3007 comes within range. Any stored information within storage terminal 3031 may be requested via the vehicular LAN by the hand-held terminal 3007. Information not stored within the vehicular LAN may be communicated via a radio WAN as described above.

Referring again to Fig. 28b, upon returning to the dock, the storage terminal 3031, also referred to herein as a vehicle terminal, joins in or establishes a peripheral LAN with the peripheral LAN devices on the dock, if necessary. Communication is also established via the premises LAN. Thereafter, the storage terminal 3031 automatically transfers the service information to the host computer 3011 which uses the information for billing and in formulating service destinations for automatic downloading the next day.

Fig. 29a is a diagrammatic illustration of another embodiment using a peripheral LAN to supporting roaming data collection by an operator according to the present invention. As an operator 3061 roams the warehouse floor he carries with him a peripheral LAN comprising the terminal 3007, code reader 3009 and a portable printer

3058. The operator collects information regarding goods, such as the box 3010, with the code reader 3009 and the terminal 3007. If the power resources are equal, the terminal 3007 may be configured and designated to also participate in the premises LAN.

Corresponding information to the code data must be retrieved from the host computer 3011. The collected code information and retrieved corresponding information can be displayed on the terminal 3007. After viewing for verification, the information can be printed on the printer 3058. Because of this data flow requirement, the computer terminal 3007 is selected as the peripheral LAN device which must also carry the responsibility of communicating with the premises LAN.

If during collection, the operator decides to power down the computer terminal 3007 because it is not needed, the peripheral LAN becomes detached from the premises LAN. Although it might be possible for the detached peripheral LAN to function, all communication with the host computer 3011 through the premises LAN is placed in a queue awaiting reattachment. As soon as the detached peripheral LAN comes within range of an attached peripheral LAN device, i.e., a device attached to the premises LAN, the queued communications are relayed to the host. It should be clear from this description that the peripheral LAN may roam in relation to a device attached to the premises LAN ("premises LAN device"). Similarly, the premises LAN device may roam in relation

to the peripheral LAN. The roaming constitutes a relative positioning. Moreover, whenever a peripheral LAN and a master device move out of range of each other, the peripheral LAN may either poll for or scan for another master device for attachment. The master device may constitute a premises LAN device, yet need not be.

To avoid detachment when the terminal 3007 is powered down, the code reader 3009 may be designated as a backup to the terminal 3007 for performing the higher power communication with the premises LAN. As described in more detail below in reference to Fig. 33c regarding the idle sense protocol, whenever the code reader 3009 determines that the terminal 3007 has stopped providing access to the premises LAN, the code reader 3009 will take over the role if it is next in line to perform the backup service. Thereafter, when the computer terminal 3007 is powered up, it monitors the peripheral LAN channel, requests and regains from the code reader 3009 the role of providing an interface with the premises LAN. This, however, does not restrict the code reader 3009 from accessing the premises LAN although the reader 3009 may choose to use the computer terminal 3007 for power conservation reasons.

In addition, if the computer terminal 3007 reaches a predetermined low battery threshold level, the terminal 3007 will attempt to pass the burden of providing premises LAN access to other peripheral LAN backup devices. If no backup device exists in the current

peripheral LAN, the computer terminal 3007 may refuse all high power transmissions to the premises LAN. Alternatively, the computer terminal 3007 may either refuse predetermined select types of requests, or prompt the operator before performing any transmission to the premises LAN. However, the computer terminal 3007 may still listen to the communications from the premises LAN and inform peripheral LAN members of waiting messages.

Fig. 29b is a diagrammatic illustration of another embodiment of a peripheral LAN which supports roaming data collection by an operator according to the present invention. An operator is equipped with a peripheral LAN 3065 comprising a housing 3067, which incorporates a printer 3069 and a dock 3071, a roaming computing terminal 3073, and a code reader 3075. The operator may roam a warehouse floor or a shipping dock and collect and retrieve data using the peripheral LAN 3065 as discussed above with respect to Fig. 29a. In this embodiment, the operator may elect to leave the housing 3067, and hence the printer, in one area of the warehouse, or on the truck, and carry only the code reader 3075 and terminal 3073. In addition, the operator may also elect to dock the terminal 3073 in the dock 3071 and carry only the code reader 3075. In any event, the terminal is capable of communicating data to the printer 3069 via RF signals or via the dock 3071.

The housing 3067 may optionally include a cigarette lighter power input cable 3077 to power the printer 3069,

and recharge the battery of the terminal 3073 via the dock 3071. The housing 3067 may also optionally include a wide area network radio to permit communication with a remote warehouse or station 3079. In addition, the housing 3067 may also be configured to include the functionality of the storage terminal 3031 discussed above with respect to Figs. 28b and 28c.

The peripheral LAN embodiments of Figs. 29a and 29b may, of course, function when detached from the premises LAN. This feature is particularly desirable in situations where attachment to the premises LAN may be more costly, such as, for example, during the remote pick-up or delivery of goods by a driver. In the situation where a driver is picking up goods, the driver may, for example, use the code reader and terminal to collect and/or enter information regarding the goods, such as their origin, destination, weight, etc. The terminal may then encode the information, and transmit it to the printer so that the driver can label each box appropriately with a bar or other type of code for later identification and routing of the goods.

Once information regarding a particular pick-up has been stored, either in the terminal or storage terminal, the driver may download the stored data using the WAN radio tc the premises LAN host computer at the remote warehouse or station 3079 so that the information may be used to pre-schedule further routing of the goods before the driver even arrives. Because WAN communication is

costly, however, the information may instead be automatically transferred wirelessly to the premises LAN host once the driver comes into range of the premises LAN, as discussed above with respect to Fig. 28b. Alternatively, or as a check to verify information previously transmitted to the premises LAN wirelessly, the information may be downloaded from the terminal to the premises LAN host via a docking system 3081 located at the warehouse or station 3079. The docking system 3081 may also be used to recharge the terminals 3073.

Once the host computer has the information regarding the goods picked up by the driver(s), the host can download the data via RF or the docking system 3081 to any number of terminals 3073 used by warehouse personnel who unload the trucks. While unloading, these personnel can, for example, use a terminal 3073 and a code reader 3075 to build containers for further distribution of the goods to various destinations. Specifically, as a container is unloaded, the label previously placed on the container by the driver is scanned by the code reader 3075, and destination information is displayed on the terminal 3073. The box may then be taken to and loaded into the container headed for the same destination. Each container may also have a label which can be scanned to verify the destination of that particular container.

Fig. 30 is a block diagram illustrating the functionality of RF transceivers built in accordance with the present invention. Although preferably plugging into

PCMCIA slots of the computer terminals and peripherals, the transceiver 3110 may also be built-in or externally attached via available serial, parallel or ethernet connectors for example. Although the transceivers used by potential peripheral LAN master devices may vary from those used by peripheral LAN slave devices (as detailed below), they all contain the illustrated functional blocks.

In particular, the transceiver 3110 contains a radio unit 3112 which attaches to an attached antenna 3113. The radio unit 3112 used in peripheral LAN slave devices need only provide reliable low power transmissions, and are designed to conserve cost, weight and size. Potential peripheral LAN master devices not only require the ability to communicate with peripheral LAN slave devices, but also require higher power radios to also communicate with the premises LAN. Thus, potential peripheral LAN master devices and other non-peripheral LAN slave devices might contain two radio units 3112 or two transceivers 3110 -- one serving the premises LAN and the other serving the peripheral LAN -- else only contain a single radio unit to service both networks.

In embodiments where cost and additional weight is not an issue, a dual radio unit configuration for potential peripheral LAN master devices may provide several advantages. For example, simultaneous transceiver operation is possible by choosing a different operating band for each radio. In such embodiments, a

2.4GHz radio is included for premises LAN communication while a 27 MHz radio supports the peripheral LAN. Peripheral LAN slave devices receive only the 27 MHz radio, while the non-potential peripheral LAN participants from the premises LAN are fitted with only the 2.4GHz radios. Potential peripheral LAN master devices receive both radios. The low power 27 MHz peripheral LAN radio is capable of reliably transferring information at a range of approximately 40 to 100 feet asynchronously at 19.2 KBPS. An additional benefit of using the 27 MHz frequency is that it is an unlicensed frequency band. The 2.4 GHz radio provides sufficient power (up to 1 Watt) to communicate with other premises LAN devices. Another benefit of choosing 2.4 GHz or 27 MHz bands is that neither require FCC licensing. Many different frequency choices could also be made such as the 900 MHz band, UHF, etc. Alternatively, infrared communication may be used in situations where line of sight may be achieved between devices on the network.

In embodiments where cost and additional weight are at issue, a single radio unit configuration is used for potential peripheral LAN master devices. Specifically, in such embodiments, a dual mode 2.4 GHz radio supports both the peripheral LAN and premises LANs. In a peripheral LAN mode, the 2.4 GHz radio operates at a single frequency, low power level (sub-milliwatt) to support peripheral LAN communication at relatively close distances 20-30 feet). In a high power (up to 1 Watt) or

main mode, the 2.4 GHz radio provides for frequency-hopping communication over relatively long distance communication connectivity with the premises LAN. Although all network devices might be fitted with such a dual mode radio, only peripheral LAN master devices use both modes. Peripheral LAN slave devices would only use the low power mode while all other premises LAN devices would use only the high power mode. Because of this, to save cost, peripheral LAN slave devices are fitted with a single mode radio operating in the peripheral LAN mode. Non-peripheral LAN participants are also fitted with a single mode (main mode) radio unit for cost savings.

Connected between the radio unit 3112 and an interface 3110, a microprocessor 3120 controls the information flow between through the transceiver 3110. Specifically, the interface 3115 connects the transceiver 3110 to a selected computer terminal, a peripheral device or other network device. Many different interfaces 3115 are used and the choice will depend upon the connection port of the device to which the transceiver 3110 will be attached. Virtually any type of interface 3110 could be adapted for use with the transceiver 3110 of the present invention. Common industry interface standards include RS-232, RS-422, RS-485, 10BASE2 Ethernet, 10BASE5 Ethernet, 10BASE-T Ethernet, fiber optics, IBM 4/16 Token Ring, V.11, V.24, V.35, Apple Localtalk and telephone interfaces. In addition, via the interface 3115, the microprocessor 3120 maintains a radio independent,

interface protocol with the attached network device, isolating the attached device from the variations in radios being used.

The microprocessor 3120 also controls the radio unit 3112 to accommodate communication with the either the premises LAN, the peripheral LAN, or both (for dual mode radios). Moreover, the same radio might also be used for vehicular LAN and radio WAN communication as described above. For example, a radio located in a vehicle or in a hand held terminal can be configured to communicate not only within a local network, but might also be capable of receiving paging messages.

More specifically, in a main mode transceiver, the microprocessor 3120 utilizes a premises LAN protocol to communicate with the premises LAN. Similarly, in a peripheral LAN mode transceiver, the microprocessor 3120 operates pursuant to a peripheral LAN protocol to communicate in the peripheral LAN. In the dual mode transceiver, the microprocessor 3120 manages the use of and potential conflicts between both the premises and peripheral LAN protocols. Detail regarding the premises and peripheral LAN protocols can be found in reference to Figs. 33-36 below.

In addition, as directed by the corresponding communication protocol, the microprocessor 3120 controls the power consumption of the radio 3112, itself and the interface 3115 for power conservation. This is accomplished in two ways. First, the peripheral LAN and

premises protocols are designed to provide for a low power mode or sleep mode during periods when no communication involving the subject transmitter is desired as described below in relation to Figs. 33-34. Second, both protocols are designed to adapt in both data rate and transmission power based on power supply (i.e., battery) parameters and range information as described in reference to Figs. 35-36.

In order to insure that the proper device is receiving the information transmitted, each device is assigned a unique address. Specifically, the transceiver 3110 can either have a unique address of its own or can use the unique address of the device to which it is attached. The unique address of the transceiver can either be one selected by the operator or system designer or one which is permanently assigned at the factory such as an IEEE address. The address 3121 of the particular transceiver 3110 is stored with the microprocessor 3120.

In the illustrated embodiments of Figs. 28-29b, the peripheral LAN master device is shown as being either a peripheral LAN access point or a mobile or portable computer terminal. From a data flow viewpoint, in considering the fastest access through the network, such choices for the peripheral LAN master devices appear optimal. However, any peripheral LAN device might be assigned the role of the master, even those that do not seem to provide an optimal data flow pathway but may provide for optimal battery usage. For example, in the

personal peripheral LAN of Fig. 29a, because of the support from the belt 3059, the printer might contain the greatest battery capacity of the personal peripheral LAN devices. As such, the printer might be designated the peripheral LAN master device and be fitted with either a dual mode radio or two radios as master devices require. The printer, or other peripheral LAN slave devices, might also be fitted with such required radios to serve only as a peripheral LAN master backup. If the battery power on the actual peripheral LAN master, i.e., the hand-held terminal 3007 (Fig. 29a, drops below a preset threshold, the backup master takes over.

Fig. 31 is a drawing which illustrates an embodiment of the personal peripheral LAN shown in Fig. 29a which designates a printer as the peripheral LAN master device. Specifically, in a personal peripheral LAN 3165, a computer terminal 3170 is strapped to the forearm of the operator. A code reader 3171 straps to the back of the hand of the user and is triggered by pressing a button 3173 with the thumb. Because of their relatively low battery energy, the computer terminal 3170 and code reader 3171 are designated peripheral LAN slave devices and each contain a peripheral LAN transceiver having a broadcast range of two meters or less. Because of its greater battery energy, the printer 3172 contains a dual mode radio and is designated the peripheral LAN master device.

Fig. 32 is a block diagram illustrating a channel access algorithm used by peripheral LAN slave devices according to the present invention. At a block 3181, when a slave device has a message to send, it waits for an idle sense message to be received from the peripheral LAN master device at a block 3183. When an idle sense message is received, the slave device executes a back-off protocol at a block 3187 in an attempt to avoid collisions with other slave devices waiting to transmit. Basically, instead of permitting every slave device from repeatedly transmitting immediately after an idle sense message is received, each waiting slave is required to first wait for a pseudo-random time period before attempting a transmission. The pseudo-random back-off time period is generated and the waiting takes place at a block 3187. At a block 3189, the channel is sensed to determine whether it is clear for transmission. If not, a branch is made back to the block 3183 to attempt a transmission upon receipt of the next idle sense message. If the channel is still clear, at a block 3191, a relatively small "request to send" type packet is transmitted indicating the desire to send a message. If no responsive "clear to send" type message is received from the master device, the slave device assumes that a collision occurred at a block 3193 and branches back to the block 3183 to try again. If the "clear to send" message is received, the slave device transmits the message at a block 3195.

Several alternate channel access strategies have been developed for carrier sense multiple access (CSMA) systems and include 1-persistent, non-persistent and p-persistent. Such strategies or variations thereof could easily be adapted to work with the present invention.

Fig. 33a is a timing diagram of the protocol used according to one embodiment the present invention illustrating a typical communication exchange between a peripheral LAN master device having virtually unlimited power resources and a peripheral LAN slave device. Time line 3201 represents communication activity by the peripheral LAN master device while time line 3203 represents the corresponding activity by the peripheral LAN slave device. The master periodically transmits an idle sense message 3205 indicating that it is available for communication or that it has data for transmission to a slave device. Because the master has virtually unlimited power resources, it "stays awake" for the entire time period 3207 between the idle sense messages 3205. In other words, the master does not enter a power conserving mode during the time periods 3207.

The slave device uses a binding protocol (discussed below with regard to Fig. 33c) to synchronize to the master device so that the slave may enter a power conserving mode and still monitor the idle sense messages of the master to determine if the master requires servicing. For example, referring to Fig. 33a, the slave device monitors an idle sense message of the master

during a time period 3209, determines that no servicing is required, and enters a power conserving mode during the time period 3211. The slave then activates during a time period 3213 to monitor the next idle sense message of the master. Again, the slave determines that no servicing is required and enters a power conserving mode during a time period 3215. When the slave activates again during a time period 3217 to monitor the next idle sense message, it determines from a "request to send" type message from the master that the master has data for transmission to the slave. The slave responds by sending a "clear to send" type message during the time period 3217 and stays activated in order to receive transmission of the data. The master is thus able to transmit the data to the slave during a time period 3219. Once the data is received by the slave at the end of the time period 3221, the slave again enters a power conserving mode during a time period 3223 and activates again during the time period 3225 to monitor the next idle sense message.

Alternatively, the slave may have data for transfer to the master. If so, the slave indicates as such to the master by transmitting a message during the time period 3217 and then executes a backoff algorithm to determine how long it must wait before transmitting the data. The slave determines from the backoff algorithm that it must wait the time period 3227 before transmitting the data during the time period 3221. The slave devices use the

backoff algorithm in an attempt to avoid the collision of data with that from other slave devices which are also trying to communicate with the master. The backoff algorithm is discussed more fully above in reference to Fig. 32.

The idle sense messages of the master may also aid in scheduling communication between two slave devices. For example, if a first slave device has data for transfer to a second slave device, the first slave sends a message to the master during the time period 3209 requesting communication with the second slave. The master then broadcasts the request during the next idle sense message. Because the second slave is monitoring the idle sense message, the second slave receives the request and stays activated at the end of the idle sense message in order to receive the communication. Likewise, because the first slave is also monitoring the idle sense message, it too receives the request and stays activated during the time period 3215 to send the communication.

Fig. 33b is a timing diagram of the protocol used according to one embodiment of the present invention illustrating a typical communication exchange between a peripheral LAN master having limited power resources and a peripheral LAN slave device. This exchange is similar to that illustrated in Fig. 33a except that, because it has limited power resources, the master enters a power conserving mode. Before transmitting an idle sense message, the master listens to determine if the channel

is idle. If the channel is idle, the master transmits an idle sense message 3205 and then waits a time period 3231 to determine if any devices desire communication. If no communication is desired, the master enters a power conserving mode during a time period 3233 before activating again to listen to the channel. If the channel is not idle, the master does not send the idle sense message and enters a power saving mode for a time period 3235 before activating again to listen to the channel.

Communication between the master and slave devices is the same as that discussed above in reference to Fig 33a except that, after sending or receiving data during the time period 3219, the master device enters a power conserving mode during the time period 3237.

Fig. 33c is also a timing diagram of one embodiment of the protocol used according to the present invention which illustrates a scenario wherein the peripheral LAN master device fails to service peripheral LAN slave devices. The master device periodically sends an idle sense message 3205, waits a time period 3231, and enters a power conserving mode during a time period 3233 as discussed above in reference to Fig 33b. Similarly, the slave device monitors the idle sense messages during time periods 3209 and 3213 and enters a power conserving mode during time periods 3211 and 3215. For some reason, however, the master stops transmitting idle sense messages. Such a situation may occur, for example, if the master device is portable and is carried outside the

range of the slave's radio. During a time period 3241, the slave unsuccessfully attempts to monitor an idle sense message. The slave then goes to sleep for a time period 3243 and activates to attempt to monitor a next idle sense message during a time period 3245, but is again unsuccessful.

The slave device thereafter initiates a binding protocol to attempt to regain synchronization with the master. While two time periods 3241 and 3245 are shown, the slave may initiate such a protocol after any number of unsuccessful attempts to locate an idle sense message. With this protocol, the slave stays active for a time period 3247, which is equal to the time period from one idle sense message to the next, in an attempt to locate a next idle sense message. If the slave is again unsuccessful, it may stay active until it locates an idle sense message from the master, or, if power consumption is a concern, the slave may enter a power conserving mode at the end of the time period 3247 and activate at a later time to monitor for an idle sense message.

In the event the master device remains outside the range of the slave devices in the peripheral LAN for a period long enough such that communication is hindered, one of the slave devices may take over the functionality of the master device. Such a situation is useful when the slave devices need to communicate with each other in the absence of the master. Preferably, such a backup device has the ability to communicate with devices on the

premises LAN. If the original master returns, it listens to the channel to determine idle sense messages from the backup, indicates to the backup that it has returned and then begins idle sense transmissions when it reestablishes dominance over the peripheral LAN.

Fig. 34 is a timing diagram illustrating one embodiment of the peripheral LAN master device's servicing of both the high powered premises LAN and the low powered peripheral LAN subnetwork, with a single or plural radio transceivers, in accordance with present invention. Block 3251 represents typical communication activity of the master device. Line 3253 illustrates the master's communication with an access point on the premises LAN while line 3255 illustrates the master's communication with a slave device on the peripheral LAN. Lines 3257 and 3259 illustrate corresponding communication by the access point and slave device, respectively.

The access point periodically broadcasts HELLO messages 3261 indicating that it is available for communication. The master device monitors the HELLO messages during a time period 3263, and, upon determining that the base does not need servicing, enters a power conserving mode during a time period 3265. The master then activates for a time period to monitor the next HELLO message from the base. If the master has data to send to the base, it transmits the data during a time period 3271. Likewise, if the base has data to send to

the master, the base transmits the data during a time period 3269. Once the data is received or sent by the master, it may again enter a power conserving mode. While HELLO message protocol is discussed, a number of communication protocols may be used for communication between the base and the master device. As may be appreciated, the peripheral LAN master device acts as a slave to access points in the premises LAN.

Generally, the communication exchange between the master and the slave is similar to that described above in reference to Fig. 33b. Block 3273, however, illustrates a situation where the master encounters a communication conflict, i.e., it has data to send to or receive from the slave on the peripheral LAN at the same time it will monitor the premises LAN for HELLO messages from the base. If the master has two radio transceivers, the master can service both networks. If, however, the master only has one radio transceiver, the master chooses to service one network based on network priority considerations. For example, in block 3273, it may be desirable to service the slave because of the presence of data rather than monitor the premises LAN for HELLO messages from the base. On the other hand, in block 3275, it may be more desirable to monitor the premises LAN for HELLO messages rather than transmit an idle sense message on the peripheral LAN.

Figs. 35 and 36 are block diagrams illustrating additional power saving features according to the present

invention, wherein ranging and battery parameters are used to optimally select the appropriate data rate and power level for subsequent transmissions. Specifically, even though network devices such as the computer terminal 3007 in Figs. 28-29b have the capability of performing high power transmissions, because of battery power concerns, such devices are configured to utilize minimum transmission energy. Adjustments are made based on ranging information and on battery parameters. Similarly, within the peripheral LAN, even though lower power transceivers are used, battery conservation issues also justify the use of such data rate and power adjustments. This process is described in more detail below in reference to Figs. 35 and 36.

More specifically, Fig. 35 is a block diagram which illustrates a protocol 3301 used by a destination peripheral LAN device and a corresponding protocol 3303 used by a source peripheral LAN device to adjust the data rate and possibly the power level for future transmission between the two devices. At a block 3311, upon receiving a transmission from a source device, the destination device identifies a range value at a block 3313. In a low cost embodiment, the range value is identified by considering the received signal strength indications (RSSI) of the incoming transmission. Although RSSI circuitry might be placed in all peripheral LAN radios, the added expense may require that only peripheral LAN master devices receive the circuitry. This would mean

that only peripheral LAN master devices would perform the function of the destination device. Other ranging techniques or signal quality assessments can also be used, such as measuring jitter in received signals, by adding additional functionality to the radios. Finally, after identifying the range value at the block 3313, the destination device subsequently transmits the range value to the slave device from which the transmission was received, at a block 3314.

Upon receipt of the range value from the destination device at a block 3321, the source peripheral LAN device evaluates its battery parameters to identify a subsequent data rate for transmission at a block 3323. If range value indicates that the destination peripheral LAN device is very near, the source peripheral LAN device selects a faster data rate. When the range value indicates a distant master, the source device selects a slower rate. In this way, even without adjusting the power level, the total energy dissipated can be controlled to utilize only that necessary to carry out the transmission. However, if constraints are placed on the maximum or minimum data rates, the transmission power may also need to be modified. For example, to further minimize the complexity associated with a fully random range of data rate values, a standard range and set of several data rates may be used. Under such a scenario, a transmission power adjustment might also need to supplement the data rate adjustment. Similarly, any

adjustment of power must take into consideration maximum and minimum operable levels. Data rate adjustment may supplement such limitations. Any attempted modification of the power and data rate might take into consideration any available battery parameters such as those that might indicate a normal or current battery capacity, the drain on the battery under normal conditions and during transmission, or the fact that the battery is currently being charged. The latter parameter proves to be very significant in that when the battery is being charged, the peripheral LAN slave device has access to a much greater power source for transmission, which may justify the highest power transmission and possibly the slowest data rate under certain circumstances.

Finally, at a block 3325, an indication of the identified data rate is transmitted back to the destination device so that future transmissions may take place at the newly selected rate. The indication of data rate may be explicit in that a message is transmitted designating the specific rate. Alternately, the data rate may be transferred implicitly in that the new rate is chose and used by the source, requiring the destination to adapt to the change. This might also be done using a predefined header for synchronization.

In addition, at the block 3325, in another embodiment, along with the indication of the identified data rate, priority indications are also be communicated. Whenever battery power is detected as being low, a radio

transmits a higher priority indication, and each receiver thereafter treats the radio as having a higher protocol priority than other such radios that exhibit normal power supply energy. Thus, the remaining battery life is optimized. For example, in a non-polling network, the low power device might be directly polled periodically so to allow scheduled wake-ups and contention free access to a receiver. Similarly, in an alternate embodiment, priority indications not need to be sent. Instead, the low battery power device itself exercises protocol priority. For example, for channel access after detecting that the channel is clear at the end of an ongoing transmission, devices with normal energy levels are required to undergo a pseudo-random back-off before attempting a transmission (to avoid collision). The low power device may either minimize the back-off period or ignore the back-off period completely. Thus, the low power device gains channel access easier than other normal power level devices. Other protocol priority schemes may also be assigned by the receivers to the low power device (via the indication), else may be taken directly by the low power device.

Fig. 36 illustrates an alternate embodiment for carrying out the data rate and possibly power level adjustment. At a block 3351 upon binding and possibly periodically, the source peripheral LAN device sends an indication of its current battery parameters to the destination peripheral LAN device. This indication may

be each of the parameters or may be an averaged indication of all of the parameters together. At a block 3355, upon receipt, the destination peripheral LAN device 355 stores the battery parameters (or indication). Finally, at a block 3358, upon receiving a transmission from the source device, based on range determinations and the stored battery parameters, the destination terminal identifies the subsequent data rate (and possibly power level). Thereafter, the new data rate and power level are communicated to the source device either explicitly or implicitly for future transmissions.

Fig. 37 illustrates an exemplary block diagram of a radio unit 3501 capable of concurrent participation on multiple LAN's. To transmit, a control processor 3503 sends a digital data stream to a modulation encoding circuit 3505. The modulation encoding circuit 3505 encodes the data stream in preparation for modulation by frequency translation circuit 3507. The carrier frequency used to translate the data stream is provided by a frequency generator circuit 3509. Thereafter, the modulated data stream is amplified by a transmitter amplifier circuit 3511 and then radiated via the one of a plurality of antennas 3513 that has been selected via an antenna switching circuit 3515. Together, the modulation encoding circuitry 3505, translator 3507, amplifier 3511 and associated support circuitry constitute the transmitter circuitry.

Similarly, to receive data, the RF signal received by the selected one of the plurality of antennas 3513 is communicated to a receiver RF processing circuit 3517. After performing a rather coarse frequency selection, the receiver RF processing circuit 3517 amplifies the RF signal received. The amplified received signal undergoes a frequency shift to an IF range via a frequency translation circuit 3519. The frequency translation circuit 3519 provides the center frequency for the frequency shift. Thereafter, a receiver signal processing circuit receives the IF signal, performs a more exact channel filtering and demodulation, and forwards the received data to the control processor 3503, ending the process. Together, the receiver signal processing 3521, translator 3517, receiver RF processing 3517 and associated support circuitry constitute the receiver circuitry.

The control processor 3503 operates pursuant to a set of software routines stored in memory 3522 which may also store incoming and outgoing data. Specifically, the memory 3522 contains routines which define a series of protocols for concurrent communication on a plurality of LANs. As part of such operation, the control processor 3503 provides for power savings via a power source control circuit 3523, i.e., whenever the participating protocols permit, the control processor 3503 causes selective power down of the radio transceiver circuitry via a control bus 3525. Also via the bus 3525, the

control processor sets the frequency of the frequency generator 3509 so as to select the appropriate band and channel of operation required by a correspondingly selected protocol. Similarly, the control processor 3503 selects the appropriate antenna (via the antenna switching circuitry 3515) and channel filtering in preparation for operation on a selected LAN.

Responding to the software routines stored in the memory 3522, the control processor 3503 selects the appropriate LANs to establish participation, detaches from those of the selected LANs in which participation is no longer needed, identifies from the selected LANs a current priority LAN in which to actively participate, maintains a time-shared servicing of the participating LANs. Further detail regarding this process follows below.

In one embodiment, the control processor 3503 constitutes a typical microprocessor on an independent integrated circuit. In another embodiment, the control processor 3503 comprises a combination of distributed processing circuitry which could be included in a single integrated circuit as is a typical microprocessor. Similarly, the memory 3522 could be any type of memory unit(s) or device(s) capable of software storage.

The radio circuitry illustrated is designed with the frequency nimble frequency generator 3509 so as to be capable of operation on a plurality of LANs/WANs. Because each of the plurality may be allocated different frequency bands, more than one antenna may be desirable

(although a single antenna could be used, antenna bandwidth limitations might result in an unacceptable transmission-reception inefficiency). Thus, to select the appropriate configuration, the control processor 3503 first identifies the LAN/WAN on which to participate and selects the corresponding radio configuration parameters from the memory 3521. Thereafter, using the configuration parameters and pursuant to control routines stored in the memory 3522, the control processor 3503 sets the frequency of the generator 3509, selects the appropriate antenna via the antenna switching circuit 3515, and configures the receiver RF and signal processing circuits 3517 and 3521 for the desired LAN/WAN.

More particularly, the antenna switching circuit 3515 comprises a plurality of digitally controlled switches, each of which is associated with one of the plurality of antennas 3513 so as to permit selective connection by the control processor 3503 of any available antenna to the transceiver circuitry.

Fig. 38 illustrates an exemplary functional layout of the frequency generator 3509 of Fig. 37 according to one embodiment of the present invention. Basically, the frequency generator 3509 responds to the control processor 3503 by producing the translation frequency necessary for a selected LAN/WAN. The illustrated frequency generator comprises a voltage controlled oscillator (VCO) 3601. As is commonly known, for a VCO,

the center frequency F_{VCO} tracks the input voltage. However, because typical VCO's are subject to drift, the VCO is stabilized by connecting it in a phase locked loop to a narrowband reference, such as a crystal reference oscillator 3603. The oscillator 3603 outputs a signal of a fixed or reference frequency F_{REF} to a divide-by-R circuit 3605, which divides as its name implies the reference frequency F_{REF} by the known number R. A phase detector 3609 receives the divided-by-R output of the circuit 3609 and the feedback from the output of the VCO 3601 via a divide-by-N circuit 3607. Upon receipt, the phase detector 3609 compares the phase of the outputs from the circuits 3605 and 3607. Based on the comparison, a phase error signal is generated and applied to a low-pass loop filter 3611. The output of the filter 3611 is applied to the input of the VCO 3601 causing the center frequency of the VCO 3601 to lock-in. Therefore, if the output of the VCO 3601 begins to drift out of phase of the reference frequency, the phase detector 3609 responds with a corrective output so as to adjust the center frequency of the VCO 3601 back in phase.

With the illustrated configuration, the center frequency of the VCO 3601 is a function of the reference frequency as follows:

$$F_{VCO} = (F_{REF} * N) / R$$

Thus, to vary the center frequency of the VCO 3601 to correspond to a band of a selected LAN/WAN in which active participation is desired, the control processor

3503 (Fig. 37) need only vary the variables "R" and "N" and perhaps the frequency of the reference oscillator. Because the output F_{REF} of the reference oscillator 3603 is quite stable, the phase lock loop as shown also keeps the output frequency F_{VCO} of the VCO 3601 stable.

More specifically, although any other scheme might be implemented, the value R in the divide-by-R circuit 3605 is chosen so as to generate an output equal to the channel spacing of a desired LAN/WAN, while the value N is selected as a multiplying factor for stepping up the center frequency of the VCO 3601 to the actual frequency of a given channel. Moreover, the frequency of the reference oscillator is chosen so as to be divisible by values of R to yield the channel spacing frequencies of all potential LANs and WANs. For example, to participate on both MTEL Corporation's Two Way Paging WAN (operating at 900MHz with 25KHz and 50KHz channel spacings) and ARDIS Corporation's 800MHz specialized mobile radio (SMR) WAN (operating at 25KHz channel spacings centered at multiples of 12.5KHz), a single reference frequency may chosen to be a whole multiple of 12.5KHz. Alternately, multiple reference frequencies may be chosen. Moreover, the value N is chosen to effectively multiply the output of the divide-by-R circuit 3605 to the base frequency of a given channel in the selected WAN.

For frequency hopping protocols, the value of R is chosen so as to yield the spacing between frequency hops. Thus, as N is incremented, each hopping frequency can be

selected. Randomizing the sequence of such values of N provides a hopping sequence for use by an access point as described above. Pluralities of hopping sequences (values of N) may be stored in the memory 3522 (Fig. 37) for operation on the premises LAN, for example.

In addition to the single port phase locked loop configuration for the frequency generator 3509, other configurations might also be implemented. Exemplary circuitry for such configurations can be found in U.S. Patent Application Ser. No. 08/205,639 (Attorney Docket Nos. DN37139XXA; 10458US03), filed March 4, 1994 by Mahany et al., entitled "Method of and Apparatus For Controlling Modulation of Digital Signals in Frequency-Modulated Transmissions". This application is incorporated herein in its entirety.

Fig. 39 illustrates further detail of the receiver RF processing circuit 3517 of Fig. 37 according to one embodiment of the present invention. Specifically, a preselector 3651 receives an incoming RF data signal from a selected one of the plurality of antennas 3513 (Fig. 37) via an input line 3653. The preselector 3651 provides a bank of passive filters 3657, such as ceramic or dielectric resonator filters, each of which provides a coarse filtering for one of the LAN/WAN frequencies to which it is tuned. One of the outputs from the bank of passive filters 3657 is selected by the control processor 3503 via a switching circuit 3655 so as to monitor the desired one of the available LANs/WANs. Thereafter, the

selected LAN/WAN RF signal is amplified by an RF amplifier 3659 before translation by the frequency translation circuit 3519 (Fig. 37).

Fig. 40 illustrates further detail of the receiver signal processing circuit 3521 of Fig. 37 according to one embodiment of the present invention. In particular, digitally controlled switching circuits 3701 and 3703 respond to the control processor 3503 by selecting an appropriate pathway for the translated IF data signal through one of a bank of IF filters 3705. Each IF filter is an analog crystal filter, although other types of filters such as a saw filter might be used. The IF filters 3705 provide rather precise tuning to select the specific channel of a given LAN/WAN.

After passing through the switching circuit 3703, the filtered IF data signal is then amplified by an IF amplifier 3707. The amplified IF signal is then communicated to a demodulator 3709 for demodulation. The control processor retrieves the incoming demodulated data signal for processing and potential storage in the memory 3522 (Fig. 37).

Fig. 41 illustrates further detail of the receiver signal processing circuit 3521 of Fig. 37 according to another embodiment of the present invention. Specifically, the IF signal resulting from the translation by the frequency translator circuitry 3519, enters the receiver signal processing circuit via an input 3751. Thereafter, the IF signal passes through an

anti-aliasing filter 3753, and is amplified by a linear amplifier 3755. An IF oscillator 3757 supplies a reference signal f_{REF} for translation of the incoming IF signal at frequency translation circuits 3759 and 3761. A phase shift circuit 3763 provides for a 90 degree shift of f_{REF}, i.e., if f_{REF} is considered a SINE wave, then the output of the circuit 3763 is the COSINE of f_{REF}. Both the SINE and COSINE frequency translation pathways provide for channel selection of the incoming data signal. Thereafter the data signals are passed through corresponding low pass filters 3765 and 3767 in preparation for sampling by analog to digital (A/D) converters 3769 and 3771. Each A/D converter forwards the sampled data to a digital signal processor 3773 which provides for further filtering and demodulation. The digital signal processor 3773 thereafter forwards the incoming data signal to the control processor 3503 (Fig. 37) via an output line 3775. Moreover, although the digital signal processor 3773 and the control processor 3507 are discrete components in the illustrated example, they may also be combined into a single integrated circuit.

Fig. 42 illustrates further detail of some of the storage requirements of the memory 3522 of Fig. 37 according to one embodiment of the present invention. To control the radio, the control processor 3503 (Fig. 37) accesses the information in the memory 3522 needed for radio setup and operation on a plurality of LANs/WANs.

Among other information, the memory 3522 stores: 1) a plurality of software protocols, one for each LAN/WAN to be supported, which define how the radio is to participate on the corresponding LAN; and 2) an overriding control set of routines which govern the selection, use and interaction of the plurality of protocols for participation on desired LANs/WANs.

Specifically, in the memory unit 3522, among other information and routines, software routines relating to the media access control (MAC) sublayer of the communication protocol layers can be found. In general, a MAC sublayer provides detail regarding how communication generally flows through a corresponding LAN or WAN. Specifically, the MAC sublayer handles functions such as media access control, acknowledge, error detection and retransmission. The MAC layer is fairly independent of the specific radio circuitry and channel characteristics of the LAN or WAN.

As illustrated, premises LAN, peripheral LAN, vehicular LAN and WAN MAC routines 3811, 3813, 3815 and 3817 provide definition as to how the control processor 3503 (Fig. 37) should operate while actively participating on each LAN or WAN. Although only the several sets of MAC routines are shown, many other sets might also be stored or down-loaded into the memory 3522. Moreover, the sets of MAC routines 3811-17 might also share a set of common routines 3819. In fact, the sets

of MAC routines 3811-17 might be considered a subset of an overall MAC which shares the common MAC routines 3819.

Below the MAC layer in the communication hierarchy, hardware and channel related software routines and parameters are necessary for radio control. For example, such routines govern the specific switching for channel filtering and antenna selection required by a given LAN or WAN. Similarly, these routines govern the control processor 3503's selection of parameters such as for R and N for the frequency generator 3509 (Fig. 38), or the selective power-down (via the power source control circuitry 3503 -- Fig. 37) of portions or all of the radio circuitry whenever possible to conserve battery power. As illustrated, such routines and parameters are referred to as physical (PHY) layer control software 3821. Each of the sets of MAC routines 3811-17 and 3819 provide specific interaction with the PHY layer control software 3821.

A set of MAC select/service routines 3823 govern the management of the overall operation of the radio in the network. For example, if participation on the premises LAN is desired, the MAC select/service routines 3823 direct the control processor 3503 (Fig. 37) to the common and premises MAC routines 3819 and 3811 respectively. Thereafter, if concurrent participation with a peripheral LAN is desired, the select/service routines 3823 direct the control processor 3503 to enter a sleep mode (if available). The control processor 3503 refers to the

premises LAN MAC routines 3811, and follows the protocol necessary to establish sleep mode on the premises LAN. Thereafter, the select/service routines 3823 directs the control processor 3503 to the peripheral LAN MAC routines 3813 to establish and begin servicing the peripheral LAN. Whenever the peripheral LAN is no longer needed, the select/service routines 3823 direct a detachment from the peripheral LAN (if required) as specified in the peripheral LAN MAC routines 3813. Similarly, if during the servicing of the peripheral LAN a overriding need to service the premises LAN arises, the processor 3503 is directed to enter a sleep mode via the peripheral LAN MAC routines 3813, and to return to servicing the premises LAN.

Although not shown, additional protocol layers as well as incoming and outgoing data are also stored with the memory 3522, which, as previously articulated, may be a distributed plurality of storage devices.

Fig. 43 illustrates a software flow chart describing the operation of the control processor 3503 (Fig. 37) in controlling the radio unit to participate on multiple LANs according to one embodiment of the present invention. Specifically, at a block 3901, the control processor first determines whether the radio unit needs to participate on an additional LAN (or WAN). If such additional participation is needed, at a block 3903, the radio unit may register sleep mode operation with other participating LANs if the protocols of those LANs so

require and the radio unit has not already done so. Next, at a block 3905, the control processor causes the radio unit to poll or scan to locate the desired additional LAN. If the additional LAN is located at a block 3907, participation of the radio unit on the additional LAN is established at a block 3909.

If additional participation is not needed at block 3901, or if the additional LAN has not been located at block 3907, or once participation of the radio unit on the additional LAN has been established at block 3909, the control processor next determines at a block 3911 whether any of the participating LANs require servicing. If any given participating LAN requires servicing, , at a block 3913, the radio unit may be required by the protocol of the given LAN to reestablish an active participation status on that LAN, i.e., indicate to the given LAN that the radio unit has ended the sleep mode. Next, at a block 3915, the radio unit services the given LAN as needed or until the servicing of another LAN takes priority over that of the given LAN. At a block 3917, the radio unit may then be required to register sleep mode operation with the given LAN if the LAN's protocol so requires.

At that point, or if no participating LAN needs servicing at block 3911, the control processor determines at a block 3919 whether the radio needs to detach from any given participating LAN. If so, the radio unit may implicitly detach at a block 3923 if the protocol of the

LAN from which the radio wishes to detach requires no action by the radio unit. However, at a block 3921, the radio unit may be required to establish active participation on the LAN in order to explicitly detach at block 3923. For example, such a situation may arise when a portable terminal desires to operate on a shorter range vehicular LAN and detaches from a premises LAN. The portable terminal may be required by the protocol of the premises LAN to establish active communication on the premises LAN to permit the radio unit to inform the premises LAN that it is detaching and can only be accessed through the vehicular LAN.

Once the radio unit is detached at block 3923, or if the radio unit does not need to detach from any participating LANs at block 3919, the control processor returns to block 3901 to again determine whether the radio unit needs to participate on an additional LAN, and repeats the process.

Fig. 44 is an alternate embodiment of the software flow chart wherein the control processor participates on a master LAN and, when needed, on a slave LAN. Specifically, at a block 3951, the control processor causes the radio unit to poll or scan in order to locate the master LAN. If the master LAN has not been located at a block 3953, polling or scanning for the master LAN continues. Once the master LAN is located, participation with the master is established at a block 3955. At a block 3957, the radio unit participates with the master

LAN until the need for the radio unit to participate on the slave LAN takes precedence. When that condition occurs, the control processor determines at a block 3959 whether participation of the radio unit on the slave network is established. If not, such participation is established at a block 3961. Next, at a block 3963, the radio unit services the slave LAN as needed or until the servicing of the master LAN takes priority. If the control processor determines at a block 3965 that servicing of the slave LAN has been completed, the radio unit detaches from the slave LAN at a block 3967 and returns to block 3957 to continue participation on the master LAN.

However, if the control processor determines at block 3965 that servicing has not been, or may not be, completed, the radio unit does not detach from the slave LAN. In that case, before returning to block 3957 to service the master LAN, the radio unit may be required by the protocol of the slave LAN to register sleep mode operation with the slave LAN at a block 3969.

In another embodiment, shown in Fig. 45, the overall communication system of the present invention has been adapted to service the environment found, for example, in a retail store. As illustrated, the premises of the retail store are configured with a communication network to provide for inventory control. Specifically, the communication network includes a backbone LAN 4501, a inventory computer 4511, and a plurality of cash

registers located throughout the store, such as cash registers 4503 and 4505. As illustrated, the backbone LAN 4501 is a single wired link, such as Ethernet. However, it may be comprised of multiple sections of wired links with or without wireless link interconnects. For example, in another embodiment, each cash register 4503 and 4505 is communicatively interconnected with the inventory computer via an infrared link.

The inventory computer 4511, which can range from a personal to main frame computer, provides central control over the retail inventory by monitoring the inventory status. Thus, the inventory computer 4511 must monitor both sales and delivery information regarding inventoried goods. To monitor sales information, the cash registers 4503 and 4505 include code scanners, such as tethered code scanners 4507 and 4509, which read codes on product labels or tags as goods are purchased. After receiving the code information read from the scanners 4507 and 4509, the cash registers 4503 and 4505 communicate sales information to the inventory computer 4511 via the backbone LAN 4501. To monitor delivery information, when the truck 4513 makes a delivery, the information regarding the goods delivered is communicated to the inventory computer 4511 via the access point 4517. As illustrated, the access point 4517 acts as a direct access point to the backbone LAN 4501, even though a series of wireless hops might actually be required.

Upon receiving the sales information from the cash registers 4503 and 4505, the inventory computer 4511 automatically debits the inventory count of the goods sold. Similarly, upon receiving the delivery information, the inventory computer 4511 automatically credits the inventory count of the goods delivered. With both the sales and delivery information, the inventory computer 4511 accurately monitors the inventory of all goods stocked by the retail store. From the inventory information, the inventory computer 4511 generates purchase orders for subsequent delivery, automating the entire process.

In particular, the inventory computer 4511 receives sales information from the cash registers 4503 and 4505 as detailed above. Whenever the restocking process is initiated, the inventory computer 4511 checks the retail inventory for each item sold to determine if restocking is needed. If restocking proves necessary, the inventory computer 4511, evaluating recent sales history, determines the quantity of the goods needed. From this information, an "inventory request" is automatically generated by the inventory computer 4511. Once verified (as modified if needed), the inventory request is automatically forwarded by the inventory computer 4511 to the warehouse 4519. This forwarding occurs via either a telephone link using a modem 4521, or a WAN link using the backbone LAN 4501, access point 4517, and an antenna tower 4523.

At the remote warehouse 4519, the delivery truck 4513 is loaded pursuant to the inventory request received from the inventory computer 4511. After loading, the truck 4513 travels to the premises of the retail store. When within range of the access point 4517, the radio terminal 4515 in the truck 4513 automatically gains access to the retail premises LAN via the access point 4517 (as detailed above), and communicates an anticipated delivery list (a "preliminary invoice"), responsive to the inventory request, to the inventory computer 4511. In response, dock workers can be notified to prepare for the arrival of the delivery truck 4513. In addition, any rerouting information can be communicated to the terminal 4515 in the delivery truck 4513. If a complete rerouting is indicated, the truck 4513 may be redirected without ever having reached the dock.

While unloading the delivery truck 4513, codes are read from all goods as they are unloaded using portable code readers, which may be built into or otherwise communicatively attached to the radio terminal 4515. The codes read are compared with and debited against the preliminary invoice as the goods are unloaded. This comparing and debiting occurs either solely within the terminal 4515 or jointly within the terminal 4515 and the inventory computer 4511. If the codes read do not correspond to goods on the inventory request, or if the codes read do correspond but are in excess of what was required by the inventory request, the goods are

rejected. Rejection, therefore, occurs prior to the actual unloading of the goods from the delivery truck 4513.

At the dock, the goods received from the delivery truck 4513 undergo a confirmation process by a dock worker who, using a radio terminal 4525 configured with a code reader, reads the codes from the goods on the dock to guarantee that the proper goods, i.e., those requested pursuant to the inventory request, were actually unloaded. This extra step of confirmation can be eliminated, however, where the dock worker directly participates in the code reading during the unloading process in the delivery truck 4513. Similarly, the code reading within the delivery truck 4513 could be eliminated in favor of the above described on-dock confirmation process, but, reloading of any wrongly unloaded goods would be required.

Upon confirmation of the delivery by the dock worker, a verified invoice is automatically generated by the radio terminal 4515 and routed to the inventory computer 4511 for inventory and billing purposes. In addition, the verified invoice is routed to the warehouse 4519. Such routing may occur as soon as the delivery truck returns to the warehouse 4519. However, to accommodate rerouting in situations where goods have been turned away at the retail store, the radio terminal 4515 communicates the final invoice immediately to the warehouse 4519. The warehouse 4519, upon receiving the

final invoice, checks the final invoice with the list of goods loaded in the delivery truck 4513, and determines whether delivery of the remaining goods is possible. If so, the warehouse 4519 reroutes the truck 4513 to the next delivery site.

The communication of the final invoice and the rerouting information between the warehouse 4519 and the terminal 4515 may utilize a low cost communication pathway through the telephone link in the premises network of the retail store. In particular, the pathway for such communication utilizes the access point 4517, backbone LAN 4501, inventory computer 4511 and modem 4521. Alternately, the communication pathway might also utilize the WAN directly from the radio terminal 4515 to the warehouse 4519 via the antenna tower 4523. Moreover, the antenna tower 4523 is merely representative of a backbone network for the WAN. Depending on the specific WAN used, the tower 4523 may actually be comprised of a plurality of towers using microwave links to span the distance between the retail premises and the warehouse 4519. Similarly, satellite relaying of the communications might also be used.

Figs. 46a-b illustrate a further embodiment of the communication system of the present invention which illustrate the use of access servers that support local processing and provide both data and program migration. Specifically, as with the previous figures, Fig. 46a illustrates a wireless and hardwired communication

network which uses a spanning tree protocol to provide ubiquitous coverage throughout a premises.

For example, if any network device, e.g., an end-point device such as a wireless, hand-held computer terminal 4601, desires to communicate with another network device, e.g., a hard-wired computer 4603, a routing request is constructed which specifically identifies the destination device. After construction, the routing request is transmitted through a spanning tree pathway to the destination device.

In particular, the terminal 4601 formulates a routing request identifying the computer 4603. The routing request may also contain, for example, a message or data to be delivered or a request for data or program code. The terminal 4601 transmits the routing request downstream (toward the root of the spanning tree) to an access device 4605. The access device 4605 examines its spanning tree routing table entries, attempting to locate an upstream path to the destination device identified by the request. Because no entry exists, the access device 4605 transmits the routing request downstream to an access device 4607. After finding no routing table entry, the access device 4607 routes the request to a root access device 4609. Finding no routing table entry for the computer 4603, the access device 4609 transmits the routing request onto a wired LAN 4610. Using its routing table which has an entry for the computer 4603, a root access device 4611 fields the routing request and

transmits the request upstream to an access device 4615. Likewise, the access device 4613, having an entry, sends the routing request to an access device 4617. Upon receipt, the access device 4617 forwards the routing request to the computer 4603.

When a network device, an end-point device for example, has a need for remotely stored program code (i.e., program objects) or data (i.e., data objects) such as a schematic diagram, delivery address or repair manual, the end-point device formulates a code or data request and sends it in a downstream spanning tree pathway. Unlike a routing request, data and code requests do not have a specific destination designated. Instead, data/code requests (data requests and/or code request) only identify the specific data or code needed. This is because the requesting device need not know the destination of the data or code needed, promoting dynamic, spanning tree migration -- as will become apparent below.

In addition, where possible, program code will be reduced to an interpretive form. Common libraries of program objects (in an object code form, i.e., executable form) are stored at each network terminal, computer or access server. Upon any request for an application program, for example, first, the sequence of calls to each program object is delivered along with a list of all program objects that are needed to fully execute the application program. Thereafter, if the

specific underlying code for any of the delivered objects is not found locally, a renewed request for the executable code for those program objects is made. Upon delivery, the application program may be executed. Moreover, the movement of the program application and other specific program objects are tracked and migrated as described above in relation to generic data.

For example, the terminal 4667 typically operates using an application program directed to an exemplary installation and service industry. A driver of a vehicle 4666 enters the premises via a dock. Upon establishing a link with the network, the terminal 4667 reports its status. In response, the terminal 4667 receives from the computer 4652 a command via the premises network to load a docking application. After determining that it does not have the docking application stored locally, the terminal 4667 transmits a program code request specifying the application. Because of previous activity, for example, the access device 4659 (which receives the transmission) happens to have the program code stored locally. It fields the request, sending the list of program objects along with the "interpretive" program object sequence. Upon receipt, the terminal 4667 might identify that all program object executable code is stored locally, and, therefore, begins to execute the application program. Otherwise, if certain program object executable is not locally stored, the terminal 4667 transmits a subsequent request. This time, the

access device 4659 might not currently store the executable program object code. Thus, the access server 4659 routes the request downstream toward a device which does store the code. Once located, the code is delivered upstream to the terminal 4667 for execution.

Requested data or program code may reside in one or more of those of the access devices 4605, 4607, 4609, 4611, 4613, 4615, 4617, 4619 and 4621 which happen to be configured as access servers. Otherwise, the data or code may be reside in one or more of the computers 4603, 4621, 4623 or 4625, if they are configured as servers.

For example, assuming that the access device 4619 has been configured as an access server and happens to store data needed by the terminal 4601, the terminal 4601 would begin the process of retrieving the data by formulating a data request. As previously mentioned, the data request does not identify the access device 4619, but only identifies the needed data. After formulation, the terminal 4601 routes the request downstream to the access device 4605. Upon receipt, the access device 4605 determines that it does not store the requested data, and fails to identify the requested data in a routing table entry. Thus, the access device 4605 forwards the data request to the access device 4607. As with device 4605, the access device 4607 cannot identify the requested data and routes the request to the access device 4609. Upon receipt, the access device 4609 consults its routing table and identifies an entry for the requested data.

The entry lists the next device in an upstream path to the data, i.e., the access device 4619 is listed. Thus, the access device 4609 forwards the data request upstream to the access device 4619. The access device 4619 responds to the data request by: 1) locating the stored data; 2) formulating a routing request (containing the data) destined for the requesting device, the terminal 4601; and 3) sending the routing request downstream to the access device 4609. Using its routing table, the access device 4609 identifies the terminal 4601, and sends the routing request (with attached data) upstream to the access device 4607. Likewise, the access device 4607 sends the routing request upstream to the access device 4605. Finally, the access device 4607 sends the routing request to the destination, the terminal 4601, completing the process. Program code (e.g., program objects) may be similarly stored, requested and delivered.

Similarly, when remote processing is required, a network device formulates a processing request which identifies the specific remote processing needed, yet need not identify a processing destination. After formulation, the processing request is transmitted downstream toward an access server or computer server capable of performing the requested processing. For example, the access device 4617 fields processing requests from the computer 4603. After determining that it cannot perform the processing, the access device 4617 consults its spanning tree routing table, yet finds no

upstream entry for any network device capable of performing the processing. Thus, the access device 4617 routes the processing request downstream to the access server 4613. Although the access device 4613 has not been configured for such processing, the access device 4613 does find an entry identifying a first network device, the access device 4615, in an upstream pathway to a location where such processing is handled. The access device 4613 forwards the processing request to the access device 4615 which is configured as an access server to handle the processing. Thereafter, the requested processing is carried out by the access device 4615, with any associated intercommunication with the computer 4603 needed via the same pathway using routing requests.

Thus, each spanning tree routing table not only includes entries for all upstream network devices, each also includes entries for all upstream data, program code and processing resources. Moreover, each such entry only identifies the next network device through which forwarded requests are to made in the pathway to the request destination. Each spanning tree table also contains an entry designating a downstream route for use when no upstream entry can be located.

In the communication network of the present invention, program code, data and local processing capabilities dynamically migrate through the network to optimize network performance. Specifically, each the access devices 4605, 4607, 4609, 4611, 4613, 4615, 4617,

4619 and 4621 are configured as access servers. However, a specific data object in high demand is not initially stored in any of the access devices. Instead, the data object in high demand is originally stored on the computer 4623, configured as a server.

Upon encountering a first data request by the terminal 4601 for the data object in high demand, each of the intermediate access servers, the access devices 4605, 4607 and 4609, fail to identify the data object which results in the sequential forwarding of the data request to the computer 4623. However, each of the intermediate access servers record entries for the data in their routing tables with a downstream destination. Thereafter, each time that a network device, such as the terminal 4601, requests the data object, the intermediate access servers which receive the request bump up a count stored in the routing table entry.

To make a determination of whether to migrate the data object or not, upon encountering a data request, each intermediate access server considers the: 1) associated count entry; 2) duration of time over which the count entry has accumulated; 3) cost of retrieving the data from the downstream source; 4) the size of the data object; and 5) its own resource availability (e.g., remaining storage space).

For example, after receiving a high number of recent requests for the data object and having a relatively high cost in extracting the downstream object, the access

device 4605 determines that migration of a copy of the data object into its own available storage could improve network performance. Thus, instead of sending the data request downstream to the access device 4607, the access device 4605 substitutes and forwards a migration request instead of the data request.

Upon receiving the migration request, the remaining intermediate access servers, the access devices 4607 and 4609 merely forward the migration request to the computer 4623. In response, the computer 4623 records the migration event, i.e., the data object migrated and the migration destination (the access device 4605), for future updating control.

The computer 4623 also forwards a copy of the data object to the access device 4609 for relaying to the access device 4605 via the access device 4607. Upon receipt, the access device 4605 stores the data object locally, and forwards a further copy back to the requesting network device, the terminal 4601. Thereafter, instead of relaying each data request for that data object downstream, the access device 4605 responds by sending a copy of the locally stored data object toward the requesting device. In other words, the access device 4605 has effectively intercepted a copy of the data for local storage, and, thereafter, forwards a copy of the locally stored copy to service any incoming requests.

In addition, upon forwarding the data object from the source, the computer 4623, to the destination, the terminal 4601, the data object size and link cost associated with reaching a given intermediate access device is recorded. For example, if a wired communication link between the computer 4623 and the access device 4609 is assigned a cost of "1", after fielding the data request, the computer 4623 constructs a data response which not only includes the requested data object, but also includes a link cost entry of "1" and an indication of the data object size. In turn, the access device 4609 identifies the cost to the access device 4607, for example a cost of "3", the access device adds the "3" to the pending cost entry in the data response, and forwards the response to the access device 4607. Similarly, the access device 4607 assesses a cost of "3" for the communication link to the access device 4605, adds the "3" to the pending cost entry of "4", and forwards the data response to the access device 4605. After assessing a cost for the link to the terminal 4601, for example a cost of "4", the data response is delivered to the terminal 4601. Thus, the terminal 4601 sees that to access the data again, it will most likely result in "11" units of communication cost. Moreover, for example, the terminal 4607 considers the cost of "3" when determining whether to migrate the data object or not.

Similarly, when a migration of a data object occurs, all intermediate access devices record the cost of the

upstream link to the copy of the data object. Thereafter, upon receiving a data request for the data object, an intermediate access device can compare the cost of the upstream pathway to the copy with the downstream pathway to the original data object to choose the pathway with the lesser cost. A notification of deletion of a copy of a data object destined for a downstream source is also noted by each intermediate access devices, requiring deletions of the entries for the "copied then deleted" data object.

For example, if a locally stored copy of the data fails to be used for a period of time determined by the access device 4605 to be too long to justify local storage (in view of the communication link costs back to the original source, the size of the data object, and potentially dwindling local resources), the access device 4605 deletes the locally stored copy of the data, and routes to the computer 4623 an indication that the local copy of the data object has been deleted. Upon receiving the indication for relaying, the intermediate access devices 4607 and 4609, in turn, remove from their routing tables the entries to the recently deleted upstream copy. Upon receipt of the indication, the computer 4623 records the deletion, completing the purging process.

Although data objects were used above to describe the migration process, program code (or program objects) are similarly migrated to and deleted from local storage. In addition, to prevent instability, a certain amount of

hysteresis must be built in to prevent vacillating migration and purging decisions.

In assigning cost units to the various communication links, comparisons between factors such as actual monetary costs, bandwidths, delays, loading and power consumption are taken into consideration. Moreover, such costs are stored as sub-entries in the spanning tree routing tables.

Although only migration of a copy from a source to a single destination was previously described, if a data or program object proves to be in high enough demand, several, or even all, access devices in the network might store a copy. All that is required is that each access device experience a significant and sustained quantity of requests for a common data object (or program code/object) to justify the storage of a local copy in view of communication link costs and available local resources.

Processing resources are similarly migrated and purged. To service a processing request, an access device must be configured not only with sufficient hardware resources but must also store the programming code and associated data necessary to perform the requested processing.

For example, if the terminal 4601 desires to search prior sales information but can neither store the information or the necessary search program routines because of limited local resources, the terminal 4601

formulates a processing request which it routes downstream to the access device 4605. In the illustrated embodiment, the access device 4609 is originally configured with the hardware and software necessary to perform the processing request. In particular, the access device 4609 uses bulk storage devices to store past sales data, and executes a search program in response to received processing requests.

Although the intermediate access server 4607 is configured with appropriate processing and storage resources, originally, it does not store the search program or the past sales data. Thus, while receiving repeated processing requests from the terminal 4601 via the intermediate access device 4605, the access device 4607 initially logs the request in its routing table and forwards the request downstream to the access device 4609 which fields, processes and responds to the requests.

Because the frequency of the requests, costs and available local resources, when not busy, the access device 4607 sends a migration inquiry downstream to the access device 4609. Upon receipt, the access device 4609 responds by sending an indication of the volume of the potential transfer upstream, to the access device 4607. Based on the indication along with the aforementioned other migration factors, the access device 4607 may or may not pursue the migration.

If migration is chosen, the access device 4607 assembles a migration request identifying the desired

processing, and routes the request downstream to the access device 4609. In response, the access device 4609, records the migration (for future updating and begins to transfer a copy of the program (or programming object(s)) and the past sales information to the access device 4607, preferably occurs during periods of low network traffic.

Although intermediate access devices between the source and destination of the processing migration are not shown in the exemplary illustration above, any intermediate access devices that do occur follow the same procedures previously set forth in reference to data object migration, recording and purging routing table entries to upstream and downstream processing devices.

As may be appreciated in view of the foregoing, in many instances, migration does not always flow immediately to the access device nearest a requesting network device. Instead, for example, an access device which receives the same data or program code requests from a plurality of different terminals will perform migration before any upstream access device unless upstream link costs are comparatively much higher.

Fig. 46b is a diagram which further illustrates the migration and purging process. In particular, a premises network consists of computers 4651 and 4652 -- configured as servers, a wired LAN 4653, and access devices 4655, 4657, 4659, 4661 and 4663 -- configured as access servers. A portable computer terminal 4664 participates in the premises network which exhibits migration and

purging as described above in reference to Fig. 46a. In addition, a vehicular network is shown and comprises of a mobile access server 4665 and a portable computer terminal 4667.

As illustrated, each of the access devices 4655 and 4659 are configured for long distance, wireless communication with the access server 4665 via a second higher power radio and associated antenna, e.g., WAN, paging, cellular, etc. The corresponding first radio and associated antenna are used for relatively lower power premises network communication.

Because of the much higher cost associated with the communication link between the access server 4665 and the access device 4659, the access servers 4665 is much more likely to engage in the dynamic migration of data/code objects or processing resources than the other access servers located within the premises network. With a link cost assessed at "20" for example, the mobile access server 4665 rapidly decides to migrate, while slowly deciding to purge migrated data. The migration/purging process used is the same as that described above in reference to the premises network of Fig. 46a.

In addition, because of the high link cost, the mobile access server 4665 is also configured to provide anticipatory migration, and responds to direct migration commands from the terminal 4667 or other controlling network devices. Specifically, anticipatory migration may occur in two ways. First, if a driver is preparing

to leave the premises to service specific appliance (for example, the schematic diagram of the unit to be migrated to the mobile access server 4665 in anticipation of future use. This form of anticipatory migration may be directed from a controlling device downstream in the premises network, e.g., the computer 4652 which also stores the schematic diagram, from the terminal 4667 upstream, or from the access server 4665 itself upon analysis of the work order.

A second form of anticipatory migration originates at the access server 4665 (although the resulting migration control could originate either up or downstream). The access server 4665 anticipates future migration needs through the storage and analysis of previous requests for data/code objects or processing resources. For example, if the access server 4665 determines that nearly every time the terminal 4667 request a given program code or program object, the terminal 4667 follows that request a short time thereafter with further requests for specific data objects. In such circumstances, instead of repeatedly initiating, requesting and delivering portions of data over the communication the higher cost link, the requested and anticipated requests are all handled in one communication session, saving money and time.

Similarly, the terminal 4667, through program design or through request monitoring, can also participate in anticipatory migration. For example, the terminal 4667

can be programmed to make all upcoming requests at one time, and often in advance of leaving the low power radio range of the premises network. The terminal 4667 can also be specifically programmed to issue direct migration and purging commands to the access server 4665, permitting further control of the migration process and system resources of the mobile access server 4665. Moreover, the terminal 4667 may be configured to historically monitor all requests so as to anticipate subsequent requests in the manner described above in reference to the access server 4665.

In addition, the terminals 4664 and 4667 are configured to receive keyed, voice and pen input. Other types of input such as video or thumbprint image capture might also be added. The terminals 4664 and 4667 can also be configured with code reading / image capturing devices, or be configured to receive input from external code reading / image capturing devices (via tethering or low power wireless links). Each terminal also provides voice and LCD (liquid crystal display) output for the user. Thus, it can be appreciated that there are many types of data to be delivered to and from the terminals 4664 and 4667. The data may take on the forms of keyed or penned in command information, penned images or signatures, captured images of 2-D codes, signatures, etc. and voice signals, for example.

Each type of data handled by the terminals 4664 and 4667 places specific requirements on the communication

network. For example, when communicating [illegible] a communication channel or link providing real-time [illegible] delivery is often required. Dedicated bandwidth may be reserved for such communications through the spanning tree network illustrated, or can be established via a cellular link with the access device 4665. Cellular radios may be built into the terminals 4664 and 4667 (via PCMCIA slots, for example) or via tethered cellular phones.

If post-processed, signature images require at most a delayed delivery of a plurality of such images over inexpensive and possibly slower or less convenient communication links. Relatively small packages of one way communication to the terminal 4667 may travel through a lower cost paging network for delivery. They could also travel through the spanning tree network, cellular networks, or through other higher cost, two way WANs.

Because programs cannot always anticipate all of the available communication channels through which the different types of data may flow (availability which not only changes from one network installation to another, but also changes within a given installation due to terminal and device configurations and their locations within the network), the routing tables within each network device subdivide routing information based on the type of data to be forwarded.

For example, the access device 4665 begins receives a communication from the terminal 4667. The

communication takes the form of a request only for voice signal data destined for the computer 4651. In response, the access device 4665 consults its routing table, determines that voice data can take one of two pathways: through either a cellular radio or WAN route to the access device 4655. In response, the access device 4665 delivers the communication route options to the terminal 4667 for user and/or software consideration.

If the request is not aborted and the cellular route is selected, the access device 4665 establishes a cellular link with the access device 4655, and requests a voice link with the computer 4651. In response, the access point 4655 consults its routing table, and, for voice data to the computer 4651, it identifies the need for dedicated wired bandwidth on the wired LAN 4653 directly with the computer 4651. In response, the access device 4655 places the request on the wired LAN 4653. In response, the computer 4651 communicates an acknowledge message which is routed through the access device 4655 to the access device 4665. The access device 4665 delivers the acknowledge message to the terminal 4667. At that point, the terminal 4667 begins sending the voice data to the computer 4651 through the designated route.

If the cellular link to the access device 4655 is in use or the end-to-end link otherwise proves unavailable, the access device 4665 reports the status, again offering the remaining communication route via the WAN. If selected, the access device 4665 establishes the patnway

to the access device for any WAN communication. In turn, the pathway is established through the access device 4665, access device 4663 and the computer 4651. With a returned acknowledge from the computer 4651, the terminal 4667 begins voice communication.

Similarly, communication pathway between any other two network devices, such as from the computer 4651 to the terminal 4664, can be established. For example, if the computer 4651 desires the user or the terminal 4664 to obtain and compare a penned signature image for comparison with an authenticated signature stored at the computer 4651, the computer 4651 first attempts to communicate the request and image data to the terminal 4664 via the premises network. If the terminal 4664 happens to be out of range of the premises network, the computer 4651 attempts to page the terminal 4664 with the comparison request. In response, the terminal 4664 considers the data type via its routing table, identifies the route(s) available, and offers the route options to the user and/or program at the terminal 4664. If selected, the terminal 4664 establishes the selected communication link for the delivery of the associated comparison image.

Moreover, because of the high cost associated with the communication link from the access device 4665 to the premises network, the access device 4665 stores several types of lower priority data until such time or data storage size justifies delivery. Such deliver may not

occur until the vehicle returns to the premises network, e.g., to a dock at the premises.

In addition, requests for communication may also include specific limitations. For example, the need for voice data only in real time can be specified, and will result in no consideration by any intermediate network device of other pseudo-random real time link options. Lowest cost delayed delivery can also be specified corresponding results. Requests with high priority specified, choose the fastest communication link regardless of cost.

Moreover, the terminals 4664 and 4667 can be configured to operate running application software under the DOS, Windows or OS/2 operating system environments.

Communication between the terminal 4667 and the access device 4665 occurs via an infrared link if the terminal 4667 is docked within the vehicle. Routing tables within the access device 4665 and terminal 4667 both contain dual entries for communication exchange pathways. First, the infrared link is attempted, if available. Otherwise a lower power RF communication transmission is used. Although a wired docking arrangement might be used instead of infrared, infrared is preferred inside the vehicle for ease of installation and to minimize wire clutter. Such infrared installations also provide support for communicating with printers, scanners and other peripheral devices within the vehicle, i.e., the vehicular LAN preferably operates

via infrared except when communicating with a remotely located terminal 4667 or with other remotely located network devices.

In another embodiment illustrated by Fig. 46b, service personnel use the vehicle 4666 for visiting customer sites. At the site, the terminal 4667 is carried within the customer's premises. Ordinarily, communication with the premises network would take place via relatively low power radio transmissions between the terminal 4667 and the access device 4665. However, communication can be achieved via a telephone jack link at the customer site, if: 1) the customer site blocks such transmissions; 2) the transmission range is exceeded; or 3) link costs or channel speed so justify. Once plugged into the telephone jack, the terminal 4667 automatically activates inactive routing table entries (by setting a flag therein) corresponding to possible telephone jack links. Thereafter, communication attempts to either the vehicular or premises LAN will offer routes via the customer's telephone jack link.

Fig. 47a is a flow diagram which more specifically illustrates the functionality of the access servers of Figs. 46a-b in handling data, processing and routing requests. At a block 4701, an access server awaits incoming communications which take the form of several types of previously mentioned requests such as data, object, processing, migration and routing requests. In addition at the block 4701, the access server awaits the

need to perform migration evaluation and processing, i.e., a time out period to lapse which occurs once every fifteen (15) minutes. This period may be modified (lengthened or shortened) as proves necessary depending on channel loading conditions.

Upon receiving a routing request as indicated at the event block 4703, the access server accesses its routing table, at a block 4705, in an attempt to identify the destination of the routing request in an upstream path. If the destination is identified, the access server forwards the routing request to the next network device in the upstream path toward the destination, at a block 4707. Otherwise, if the destination is not identified in the routing table at the block 4705, at the block 4707 the access server transmits the routing request to the next network device in the downstream path. Thereafter, the access server returns to the block 4701 to await another event.

At the block 4701, upon receiving and logging a migration request, the access server vectors from an associated event block 4709 to determine whether it stores the requested migration information (e.g., the requested code or data or the program code and/or data associated with a processing resource migration request) locally or not at a block 4711. If not, the access point branches to the block 4705 to identify the closest (or any) network device in the spanning tree pathway. For example, if the routing table carries no entries for the

migration information, the access server routes the migration request to the next downstream network device. Otherwise, if the routing table carries only an upstream or a downstream entry, the access server routes the request as specified by the routing table. However, if more than one entry exists for the requested migration information, the access server routes the migration request along the lowest cost spanning tree pathway (as indicated in the routing table).

However, if, at the block 4711, the access server determines that it stores the migration information locally, the access server: 1) retrieves the migration information and records the migration event for update control, at a block 4713; 2) accesses its routing table to identify the forwarding pathway, at the block 4705; 3) forwards the retrieved migration information, at the block 4707; and 4) returns to the block 4701 to await another event.

After receiving and logging (counting the occurrence of) a processing request at the block 4701, the access server branches via an event block 4715 to determine whether the requested processing can be performed locally or not at a block 4717. If not, the access server forwards the processing request at the block 4707 per routing table instruction at the block 4705. Afterwards, the access server returns to the await another event at the block 4701.

However, if the access server determines that it can perform the requested processing at the block 4717, the access server performs the processing at a block 4719, generates a response at a block 4721, routes the response back to the requesting network device at the block 4707 per routing table instruction at the block 4705, and, finally, returns to the block 4701 to await another event.

Upon receiving and logging a data or code request at the block 4701, the access server vectors via an event block 4723 to determine whether the requested data or code is stored locally at a block 4725. If so, the access server branches to a block 4727 to retrieve the data or code from storage. Thereafter, the data or code is forwarded at the block 4707 per routing table instruction at the block 4705. Once forwarded, the access server branches to the block 4701 to await another event.

At the block 4725, if the access server determines that the requested data or code is not stored locally, the access server considers whether it should migrate the data at a block 4729. The access server analyzes the overall link cost, the size of the requested data or code, the frequency of such requests, available local storage resources (some of which it may determine to recapture by purging other locally stored data, code or processing resources).

Specifically, if sufficient local resources are (or can be made) available, the access server determines the weighted average frequency of the requests for that data or code. The frequency is then multiplied by a predetermined fraction (50%) of the overall link cost for retrieving the data or object to the access server from the current source. The resulting number is then compared to a migration threshold number, for example "10".

If, at the block 4729, the access server determines that the threshold number is greater than the resulting number, the access server, deciding not to migrate, branches to route the data/code request per routing table instruction at the blocks 4705 and 4707. Alternatively, if the access server determines that the threshold number is equal or less than the resulting number at the block 4729, the access server decides to migrate. Thus, at a block 4731, the access server creates and sends a migration request (instead of merely forwarding the data/code request) and awaits delivery of the requested code or data. Upon receipt, at a block 4733, the access server stores the data or code. Thereafter, the data/code is retrieved at the block 4727 for routing to the requesting network device via the blocks 4705 and 4707. Once routing is complete, the access server again returns to the block 4701 to await another event.

Finally, upon receiving a time out event signifying the periodic need to perform migration evaluation and

processing, the access server branches to execute migration procedures at a block 4737, as described in more detail below.

Fig. 47b is a flow diagram utilized by the access servers of Figs. 46a-b to manage the migration of data and program code from a source storage and/or processing device toward an end-point device. More specifically, the exemplary flow diagram illustrates the migration and purging procedures represented by the block 4737 of Fig. 47a.

Upon encountering a time out event (occurring every 15 minutes), an access server begins the illustrated procedure of Fig. 47b. At a block 4751, the access server retrieves a data/code entry from its routing table for which it provides local storage. At a block 4753, the current count recorded (indicating the number of requests for that data/code entry during the current time out interval) is multiplied by two thirds (2/3) and added to one third (1/3) the value of the previously recorded weighted frequency. The access server records the result as the new weighted frequency in the routing table entry. This weighting of frequency constitutes an "aging" of the data/code routing table entry.

At a block 4755, fifty percent (50%) of the overall cost of the link, i.e., from the access server to another source of the locally stored data/code, is multiplied by the newly recorded weighted frequency. The access server compares the results of the multiplication with a

hysteresis threshold at a block 4757. The hysteresis threshold is also referred to herein as a purging threshold. In premises network locations, for example, the hysteresis threshold is set at five (5) units below the migration threshold of the block 4729 in Fig. 47a. However, the migration and hysteresis thresholds may need be modified in alternate network embodiments, such as may be found in vehicular network installations.

If the hysteresis threshold is exceeded, the access server determines that it should continue to store the data/code, and branches to a block 4759 to determine whether there are any remaining entries for locally stored data/code which have not yet been considered for purging. Alternatively, if the hysteresis threshold is not exceeded, the access server determines that the data/code item should be purged, and does so at a block 4761. Thereafter, the access server branches to the block 4759.

If, at the block 4759, other data/code items which have not yet been considered for purging, the access server repeats the purging consideration of the blocks 4751 through 4759 until all locally stored data/code items have been considered. At that point, the access server branches to block 4763 to begin migration and purging consideration of processing resources.

First, the access server retrieves a routing table entry relating to processing resources, i.e., supporting program code and any associated data. At a block 4765,

the access server ages the entry, i.e., performs the aforementioned weighted frequency averaging. Thereafter, fifty percent (50%) of the overall link cost is multiplied with the new weighted frequency at a block 4767. If the entry indicates local storage of the processing resources at a block 4769, the access server compares the results with the hysteresis threshold at a block 4771. If above the hysteresis threshold, the access server continues to store the processing resources, branching to consider any remaining processing resource entries at a block 4775. Otherwise, the access server purges the stored resources at a block 4773 before considering any remaining entries at the block 4775.

Alternately, if the routing table entry indicates that the processing resources are not stored locally, at a block 4777, the access server determines whether it has been configured with the hardware necessary to perform the processing. If not, the access server branches to the block 4775 to consider process other entries. Otherwise, at a block 4779, the access server compares the migration threshold with the result, i.e., 50% of the link cost multiplied by the new weighted frequency. If the result does not exceed the migration threshold, the access server branches to the block 4775 to consider other entries. If the result exceeds the migration threshold, the access server formulates and routes a migration request for the processing resources, awaits

the responsive delivery and stores the resources locally at a block 4781, before branching to the block 4775.

At the block 4775, if the access server determines that other processing resource entries have not be considered for purging or migration, it repeatedly branches back to the block 4763 to carry out the consideration cycle until complete. Thereafter, the migration/purging procedure ends, and the access point returns to the block 4701 of Fig. 47a to await the occurrence of another event.

Fig. 48 is a schematic diagram of the access servers of Figs. 46a-b illustrating an exemplary circuit layout which supports the functionality described in reference to Figs. 47a-b. In particular, a typical access server, an access server 4801, is configured with transceiver circuitry 4803 and associated antenna 4805 for participating in the premises, peripheral and/or wide area networks. In addition, another transceiver, a transceiver circuit 4807, and associated antenna 4809 might be added, for example, to support WAN or cellular communications. Although not shown, interface circuitry for other wireless or wired communication links may be included in the access server configuration when needed.

Processing circuitry 4811 provides at least three processing functions for the access server by managing or performing: 1) communication processing functionality; 2) migration and purging; and 3) local resource processing. wherein incoming communications. Although in most

embodiments, the processing circuitry 4811 comprises a single microprocessor, it may comprise several. Moreover, if the processing circuitry 4811 is not configured to perform migration and local resource processing, the illustrated access device operates as an access point.

The processing circuitry 4811 utilizes a memory 4813 for short term and long term bulk storage. The memory 4813 comprises hard drive storage, dynamic RAM (random access memory), flash memory, and ROM (read only memory). However, all other types of memory circuits or devices might alternately be used.

Specific hardware configurations needed to accommodate specialized processing requests are represented by a circuit/device block 4815. However, such hardware need not be present to service relatively basic processing requests. Additionally, access servers may either be battery powered although, if the network configuration permits, AC (alternating current) power is preferred.

Fig. 49a is a specific exemplary embodiment of an access server in a multi-hop communication network utilized for remote processing of 1-D (one dimensional) or 2-D (two-dimensional) code information. In this embodiment, a code reader 4901 is used to capture and transmit code information for further processing, including decoding, by a remote access server in a premises LAN. Specifically, a user brings the code

reader 4901, which preferably is a CCD (charged coupled device) type reader, into a reading relationship with a 2-D code 4903 located on a container 4905. Light reflected from the code 4903 is received by the code reader 4901 and directed onto the CCD located within the reader to "capture" the code image.

To enable the CCD to operate properly, however, it may first be necessary for the reader to focus the image on the CCD. Such focusing can, for example, be performed by conventional techniques known in the camera art. As another example, one or more spotter beams are presently used to ensure that the user is holding the reader the proper distance from the code to enable the CCD to properly capture the image.

Once captured, the code image may then be digitized within the reader to create a digital signal representative of the code image, which is then transferred, via RF transmissions, to other network devices for further processing. Alternatively, the reader 4901 may transmit a modulated analog signal representative of the code image to other network devices for further processing.

In any event, the code reader 4901, an end-point device, forwards the code image signal downstream in the premises LAN to the first access server in the network that has the capability of decoding the signal into the usable information represented by the code 4903. As discussed above, any one or all of the access devices

4907-4913 may be an access server and contain the digital signal processing circuitry necessary to decode the code image signal. For example, the network may be designed such that the access device 4907 is an access server which performs decoding for all code readers, such as the code reader 4901, being used in a designated area. If, however, the access device 4907 is merely an access point, or is an access server but does not have decoding capability, then the access device 4907 relays the code image signal downstream.

More specifically, and as discussed more completely above, the code reader 4901 sends a processing request downstream to the access device 4907. If the access device 4907 is an access point, the processing request is simply relayed downstream to the access device 4909. If the access device 4907 is an access server, it looks up in its table to determine whether it has the capability to perform the type of processing requested, i.e., decoding. If it does, the access device 4907 sends an acknowledge and the code reader 4901 forwards the code image signal to the access device 4907 for decoding. Once decoded, the information may be re-transmitted to the code reader 4901 for display on a screen (not shown). In addition, or alternatively, the access device 4907 may send a good read signal to the code reader 4901 to indicate to the user that the reading operation has resulted in a valid reading. The decoded information may

also be transmitted to a host computer [illegible] network device for further processing.

If the access device 4907 does not find decode capability listed in its table, it forwards the processing request downstream to access device [illegible]. Likewise, if access device 4909 is an access point or an access server without decode capability, the processing request is forwarded downstream to the access device 4913. Once access device 4913 receives the processing request, it also examines its table to determine whether it, or any device upstream of it (such as, for example, access device 4911), has the capability to service the processing request. If it does locate such capability, it sends an acknowledge upstream to the code reader 4901 which forwards the code image signal to the access device 4913 for decoding thereby or for routing to the upstream access device having that capability.

If the access device 4913 does not locate decode capability in its table, it forwards the processing request to host computer 4915 for decoding thereby or so that the host computer 4915 can locate a device having the capability to service the processing request. Of course, as mentioned above, the network could be configured such that each one of the access devices 4907-4913 is an access server having the circuitry necessary for decoding.

While a CCD type code reader is preferred with respect to the embodiment of Fig 49a, other types of code

readers, including laser scanners, are also contemplated. Furthermore, while the above description places the decoding circuitry in a device external to the code reader 4901, the code reader 4901 may house such decoding circuitry and may transmit decoded data to external network devices for further processing. However, there are many advantages to placing the decoding circuitry external to the code reader 4901. For example, because the code reader is a portable device and likely battery-powered, power conservation as well as reader size and weight become important design considerations. By placing the decoding circuitry in a device external to the reader 4901, the reader uses less power and may be smaller and lighter than if the decode circuitry is placed in the code reader 4901. Further, in an environment where numerous code readers are used, placing the decode circuitry in one or a few external devices rather than all readers, which are often dropped by users, reduces the chances that the decode circuitry will be damaged. In addition, such a configuration reduces the amount of circuitry used and consequently results in lower reader manufacturing costs.

In addition, the code reader 4929 is configured to collect signature, printed text and handwriting images for further processing. Although further processing can be performed on-board, within the reader 4929, in one embodiment it occurs within an access server.

Either way, such processing first involves the identification of the type of information contained within the image. If the user does not simplify the process by identifying the type of image captured, automatic identification is invoked. This occurs by first attempting to identify the image as a 2-D code. If this fails, the processing involves an attempt at character recognition to identify any printed text that might exist within the image. If no text is found, an analysis is performed to determine whether the image is a handwritten signature. Finally, if all else fails, the image is generically classified as a picture. Several examples of pictures include: images of bakery shelf space in a given store for subsequent collection and evaluation of ones competition; images of broken equipment for transmission to remote experts for service advice; and images of meter displays for billing verification.

After identification, each type of data receives yet further processing. Decoded 2-D code information is forwarded and acknowledged. Handwritten signatures are compared with known authentic counterparts. Other types of images may be associatively forwarded, stored, displayed and/or acknowledged.

Fig. 49b is an alternate embodiment of Fig. 49a wherein communication between the 2-D code reader and the access devices takes the form of modulated infrared transmissions. Specifically, as discussed above with

respect to Fig. 49a, a user uses a code reader 4917 to read a 2-D code 4919 on a container 4921. The user then points the code reader 4917 at an infrared transceiver 4923 of an access device 4925 and transmits a processing request to the access device 4925 using infrared transmissions. To facilitate receipt of the infrared transmissions by the infrared transceiver 4923, the reader may disperse its transmissions, say, for example, four inches over a distance of ten feet. Such dispersion allows a user to be less accurate in aiming the code reader 4917 at the infrared transceiver 4923. The infrared transceiver 4923 may be, for example, a phototransistor/photodiode pair.

As above, if the access device 4925 is simply an access point, the processing request is simply relayed downstream, via either RF or infrared transmissions, to a further access device downstream. If the access device 4925 is an access server, it looks up in its table to determine whether it has the capability to perform the type of processing requested. If it does, the access device 4925 sends an acknowledge via infrared transmissions to the code reader 4917 and the code reader 4917 forwards the code image signal to the access device 4925 via infrared transmissions for decoding. The access device 4925 may then transmit the decoded information to the code reader 4917 for display on a screen and/or forward the decoded information to a host computer 4927 for further processing.

If the access device 4925 does not find decode capability listed in its table, the access device 4925 forwards the processing request to one of the access devices 4924, 4926, or 4928 to locate such decoding capability similarly as discussed above with respect to Fig. 49a. When such a device is located, the code reader, via infrared transmissions, performs a batch forwarding of the stored image data to the access device 4925 for eventual decoding by one of the access devices 4924, 4926, or 4928 or by a host computer 4927 or another device in the premises LAN (i.e., whichever is the first device located that has the decoding capability). In this embodiment, communication between access devices may be achieved using either RF or infrared transmissions. Furthermore, a user may choose to directly communicate with any specific access device in the network simply by pointing the code reader 4917 at that device and transmitting a processing request.

Fig. 49c is an alternate embodiment of Fig. 49a wherein indirect communication between the 2-D code reader and the access servers takes place via holstering or docking access servers. Specifically, as discussed above with respect to Fig. 49a, a user uses a code reader 4929 to read a 2-D code on a container. The user then places the reader 4929 in a holster access device 4931. The user may support the holster access device 4931 by a shoulder strap 4933 and belt 4935 to facilitate portability.

In one embodiment, the holster access device 4931 may be configured to perform decoding so that when the code reader 4929 is placed inside the holster access device 4931, the code reader 4929 may transmit the code image data to the holster access device 4931 for immediate decoding thereby. Alternatively, if the holster access device 4931 does not house the necessary decoding circuitry, the holster access device 4931 transmits a processing request downstream to one of access devices 4937-4943 to locate such decoding capability similarly as discussed above with respect to Fig. 49a.

In a scenario where numerous codes 4945 are to be read successively by the code reader 4929, the code reader 4929 may store the read image data and perform a batch transmission to the holster access device 4931 for immediate decoding thereby if the holster access device 4931 is configured with decoding circuitry. In another embodiment where the holster access device 4931 is not so configured, the code reader 4929 transmits a processing request to the holster access device 4931 via infrared transmissions. The holster access device 4931 in turn forwards the processing request downstream via RF transmission to one of the access devices 4937-4943 to locate such decoding capability similarly as discussed above with respect to Fig. 49a. When such a device is located, the code reader, via the holster access device 4931, performs a batch forwarding of the read image data

for eventual decoding by one of the access devices 4937-4943 or by a host computer 4947 or another device in the premises LAN (i.e., whichever is the first device located that has the capability).

In an alternate embodiment, batch transmission of stored image data may be performed via a docking access server 4949. When a user has completed his code reading tasks, he docks the code reader 4929 in a bay 4951 of the docking access server 4949. Other users, when their tasks are completed, may similarly dock their code readers in other bays of the docking access server 4949. In one embodiment, similarly as discussed above with respect to the holster access device 4931, once a code reader is docked in the docking access server 4949, the code reader performs a batch transmission of its stored code image data to the docking access server 4949 for immediate decoding thereby if the docking access server 4949 is configured with decoding circuitry. In another embodiment where the docking access server 4949 is not so configured, the code reader 4929 transmits a processing request to the docking access server 4949 via infrared transmissions. The docking access server 4949 in turn forwards the processing request downstream via RF transmission to one of the access devices 4937-4943 to locate such decoding capability similarly as discussed above with respect to Fig. 49a. When such a device is located, the code reader, via the docking access server 4949, performs a batch forwarding of the stored image

data for eventual decoding by one of the access devices 4937-4943 or by a host computer 4947 or another device in the premises LAN (i.e., whichever is the first device located that has the decoding capability).

In the embodiments of Figs. 49b or 49c wherein a number of codes are read and the captured image data is stored within the code reader for batch transmission at a later time, it may be desirable to configure the network such that decoding is performed first within the code reader. Specifically, when a user successively reads a plurality of codes, a user can ensure that each reading operation is successful or valid when the decoding is done immediately within the reader and the user is provided some sort of good read acknowledgement by the reader. On the other hand, if the image data is simply stored for later decoding by an off-site device, the user cannot be sure that each reading operation resulted in a valid read. Such a situation may not be a problem, however, if the code and reader are highly reliable or if simple information, such as a signature, is being read which may not require a validity determination.

Fig. 50 is a schematic diagram similar to that shown in Fig. 48 which illustrates the circuit layout used in an access server of Fig. 49 to process the 2-D code information. Specifically, in an access point 5001, a processing circuitry 5003 manages 2-D code processing functionality as indicated by a block 5005. Although

migration processing functionality is also present, in some embodiments such as those which use a single access server, the migration processing need not be present.

In a memory 5007, the access point 5001 also stores a database of known 2-D images in an image database 5009. To further support 2-D code processing, digital signal processing circuitry 5011 has been added.

As configured, the signal processing circuitry 5011 assists the exact decoding of 2-D images, and may also be used in the image comparison process of received 2-D images with the database 5009 of stored images.

Figs. 51a-b are flow diagrams illustrating the operation of the 2-D code processing access servers of Figs. 49-50. In Fig. 51a, when the access server receives image data via its LAN transceiver, it first attempts at a block 5101 to exactly identify the code information from the received code image data. Specifically, the access server uses its code processing circuitry to perform an analysis of the received image data using a decoding algorithm specifically designed for decoding the type of code which was read. A number of 2-D code types exist, including, for example PDF-417, Maxicode, etc., which have specific corresponding decoding algorithms or rules.

After its analysis is complete, the access server next determines whether the exact identification was successful at a block 5103. Determining whether an identification was successful often depends on the type

of code used. If enough redundancy is built into the code, then the loss of a number of bits of data resulting from, for example, a partially blurred image may not be fatal to a successful exact identification. If, on the other hand, the type of 2-D code being read is less "tolerant," then even the loss of a single bit might result in a failed exact identification.

In any event, if the exact identification is successful, at a block 5105, the access server sends the identified code information to a predetermined destination for further processing, and acknowledges the successful identification. If the exact identification is not successful, however, the access point performs a further analysis of the image data to attempt to identify the corresponding code information.

At blocks 5107 and 5109, the access server compares the received image to stored images located in its image database and attempts to locate the closest or best match. Although grey scale considerations and image-shifting correlation techniques are contemplated, in a relatively simple embodiment, such a comparison involve a process of scaling the received image to correspond to the stored images, then performing an "exclusive OR" of the received image with the stored images. More exact matches will yield an overall sum value nearer to zero.

After the access point completes its comparison and has identified the closest or best match between the received image data and the stored images, the access

point then determines at a block 5111 if the overall value resulting from the best match comparison is above a predetermined accuracy threshold. Such an accuracy threshold may vary depending on, again, the type of code that was read, and the level of importance associated with a good read. If the overall value is below the predetermined threshold, the access server, as above, sends the identified code information (corresponding to the best match stored image) at a block 5105 to a predetermined destination for further processing, and acknowledges the successful decode.

If the overall value of the best match comparison is above the predetermined threshold, then, at a block 5113, the access server forwards a bad read or retry message to the code reader to indicate to the user to re-read the code.

Fig. 51b is similar to Fig. 51a except that the comparison of the received image with stored images is performed before any exact identification is attempted. Specifically, the access server first compares the received image to the stored images at a block 5115, identifies the closest match at a block 5117, and determines whether the overall value of the comparison is above a predetermined accuracy threshold at a block 5119. If the overall value is below the threshold, the code information relating to the best match stored image is simply forwarded at a block 5121 to a pre-determined destination for further processing.

If the overall value is below the threshold, then the access server attempts the exact identification and determines success at blocks 5123 and 5125. If such exact identification is successful, then the access device forwards the code information at block 5121. If it is not successful, the access device forwards a retry message to the code reader at block 5127.

Fig. 52 illustrates the structuring of 2-D code information so as to support a hierarchical recognition strategy as used by the access server of Figs. 49-50. In the image database of an access server, each known image are stored and hierarchically organized in sections. Each section of image contains information relating to a specific category of information. For example, as shown, images may include a main category followed by further and further sub-categories. Thus, the image database stores all of the images in the main or first category at a top level in the hierarchy. Under each main category image, the image database stores only those sub-category images which coexist with the main category image on known complete 2-D code images. Similarly, under each sub-category image, the image database only stores sub-sub-category images which coexist with the main category image and the sub-category image.

Fig. 53 is a diagram illustrating an exemplary 2-D code 5301 wherein the hierarchical structure of Fig. 52 is implemented. From left to right, top to bottom, the illustrated 2-D code provides image portions of

categories separated by five bit line borders, such as a border 5303. As shown, the main category image represents "grocery". The sub-category represents "beans", and so on for the further sub-categories.

Using such a hierarchical categorization, the access server can more rapidly perform the process of image comparisons. For example, at a main category level in the hierarchy, a grocery image, an office supply image and general merchandize image might be the only three types of main category images known to the access point. If after comparing the received and the stored main categorization images, no acceptable match is found, the attempted comparison ends without ever having to compare the remainder of the potentially thousands of remaining images stored in the image database. Similarly, if a main level match is found with the stored office supply image, no comparison need be made with the plethora of remaining images under the grocery image main category.

Further detail of the efficiency of such a hierarchical organization can be found below in reference to Fig. 54. In addition, although the 2-D code illustrated in Fig. 53 is not necessarily a current 2-D code standard, the principle of hierarchical organization can be utilized in current 2-D code standards to take advantage of the image comparison efficiencies involved.

Fig. 54 is a flow diagram illustrating the functionality of the access server of Figs. 49-50 in carrying out the hierarchical recognition strategy of

Figs. 52 and 53. The access server begins the hierarchical image comparison process, and, at a block 5401, extracts from the received 2-D image a first subcategory image portion, i.e., the main category image indicating "grocery" for example. At a block 5403, the access server compares the extracted image with each of the main category images stored in the image database. If the closest comparison fails to fall within an accuracy threshold at a block 5405, the access server indicates that the comparison has failed at a block 5407, and ends the process.

Otherwise, if the comparison is within the accuracy threshold at the block 5405, the comparison process continues with the access server checking to see if there are any further sub-categories at a block 5409. Because other sub-categories exist, the access point branches to repeat the process beginning at the block 5401. This time, the access server extracts from the received image the image portion relating to the first sub-category (beans) for comparison at the block 5403 with only those first known sub-category images having "grocery" as the main category.

Again if no match within the threshold is found, the access point vectors to indicate failure at the block 5407, and terminates the process. However, if a sub-category match is found, the access point branches to handle the sub-sub-category in a similar way. If, at the block 5409 after successfully repeating the comparison a

number of times, the access point concludes that there are no further sub-categories to compare, the access point delivers the 2-D code information stored in the image database and associated with the matching stored image, and successfully ends the code identification process.

The known image database is supplemented by exact decoding as illustrated for example in Fig. 51b, wherein any successful exact decode is used to provide both categorized image and information portions for subsequent decoding through comparison. In addition, although the hierarchical structuring described herein offers many advantages, it need not be implemented to carry out the comparison process.

Moreover, it will be apparent to one skilled in the art having read the foregoing that various modifications and variations of this communication system according to the present invention are possible and is intended to include all those which are covered by the appended claims.

The claims defining the invention are as follows:

1. A communication network having a plurality of computing devices at least one of which is a mobile terminal device configured with a wireless transceiver, said communication network comprising:

a plurality of access devices being arranged in a spanning tree configuration to support communications among the plurality of computing devices; and

at least one of said plurality of access devices being configured to selectively intercept, store and, for future requests, forward requested data, thereby reducing traffic on the communication network.

2. The communication network of claim 1 wherein at least one of said plurality of access devices being configured to selectively intercept and stores requested processing resources for future processing, thereby reducing traffic on the communication network.

3. The communication network of claim 2 wherein the processing resources perform the function of decoding signals representative of two-dimensional images captured by a two-dimensional code reading device.

4. The communication network of claim 1 wherein at least one of said plurality of access devices being configured to selectively intercept, store and forward

AUSTRALIAN PATENT OFFICE

requested program code, thereby reducing traffic on the communication network.

5. The communication network of claim 1 wherein the at least one of said plurality of access devices considers the cost of re- obtaining data before selecting which data to store.

6. The communication network of claim 1 wherein the at least one of said plurality of access devices considers the frequency that data is requested before selecting which data to store.

7. The communication network of claim 1 wherein the at least one of said plurality of access devices considers its available storage capacity before selecting which data to store.

8. The communication network of claim 1 wherein the at least one of said plurality of access devices considers the size of the data before selecting which data to store.

9. The communication network of claim 1 wherein the at least one of said plurality of access devices selectively deletes stored data.

10. The communication network of claim 9 wherein the at least one of said plurality of access devices considers the cost to re-obtain the stored data before selecting what stored data to delete.

11. The communication network of claim 9 wherein the at least one of said plurality of access devices considers the frequency that the stored data is requested before selecting what stored data to delete.

12. A communication network having a computing device and a mobile terminal device configured with a wireless transceiver, said communication network comprising:

a data source;

a plurality of access devices being arranged to provide a communication pathway between said mobile terminal device and said computer device; and

at least one of said plurality of access devices being configured to monitor communication traffic through the at least one of said plurality of access devices and to selectively store for future forwarding requested data so as to shorten the communication pathway from the data to said mobile terminal device.

13. The communication network of claim 12 wherein at least one of said plurality of access devices being configured to monitor communication traffic through the at least one of said plurality of access devices and to

AUSTRALIAN PATENT OFFICE

selectively store for future processing requested processing resources so as to shorten the communication pathway from the processing resources to said mobile terminal device.

14. The communication network of claim 13 wherein the processing resources perform the function of decoding signals representative of two-dimensional images captured by a two-dimensional code reading device.

15. The communication network of claim 13 wherein the at least one of said plurality of access devices considers the cost of re- obtaining requested processing resources before selecting which processing resources to store.

16. The communication network of claim 13 wherein the at least one of said plurality of access devices considers the frequency that processing resources are requested before selecting which processing resources to store.

17. The communication network of claim 13 wherein the at least one of said plurality of access devices considers its available storage capacity before selecting which processing resources to store.

18. The communication network of claim 13 wherein the at least one of said plurality of access devices considers the size of the processing resources before selecting which processing resources to store.

19. The communication network of claim 12 wherein at least one of said plurality of access devices being configured to monitor communication traffic through the at least one of said plurality of access devices and to selectively store for future forwarding requested program code so as to shorten the communication pathway from the program code to said mobile terminal device.

20. The communication network of claim 19 wherein the at least one of said plurality of access devices considers the cost of re- obtaining program code before selecting which program code to store.

21. The communication network of claim 19 wherein the at least one of said plurality of access devices considers the frequency that program code is requested before selecting which program code to store.

22. The communication network of claim 19 wherein the at least one of said plurality of access devices considers its available storage capacity before selecting which program code to store.

23. The communication network of claim 19 wherein the at least one of said plurality of access devices considers the size of the program code before selecting which program code to store.

24. The communication network of claim 12 wherein the at least one of said plurality of access devices considers the cost of re-obtaining data before selecting which data to store.

25. The communication network of claim 12 wherein the at least one of said plurality of access devices considers the frequency that data is requested before selecting which data to store.

26. The communication network of claim 12 wherein the at least one of said plurality of access devices considers its available storage capacity before selecting which data to store.

27. The communication network of claim 12 wherein the at least one of said plurality of access devices considers the size of the data before selecting which data to store.

28. The communication network of claim 12 wherein the at least one of said plurality of access devices selectively deletes stored data.

29. The communication network of claim 28 wherein the at least one of said plurality of access devices considers the cost to re-obtain the stored data before selecting what stored data to delete.

30. The communication network of claim 28 wherein the at least one of said plurality of access devices considers the frequency that the stored data is requested before selecting what stored data to delete.

31. The communication network of claim 12 further comprising a processing resource device that performs processing and that is located remotely from the mobile device.

32. A communication network having at least one mobile terminal device comprising a two-dimensional code reading device configured with a first wireless transceiver, said communication network comprising:

a plurality of access devices being arranged to maintain wireless communication with a two-dimensional code reading device;

at least one of said plurality of access devices comprising a second wireless transceiver for receiving signals representative of two-dimensional images captured by a two-dimensional code reading device, and a code processing circuit for decoding the received signal.

AUSTRALIAN PATENT OFFICE

33. The communication network of claim 32 wherein another of said plurality of access devices comprises a code processing circuit for decoding received signals representative of two-dimensional images captured by a two-dimensional code reading device, said another of said plurality of access devices requesting processing resources for performing said decoding.

34. The communication network of claim 32 wherein the plurality of access devices are arranged in a spanning tree configuration.

35. The communication network of claim 32 wherein said code processing circuit of said at least one of said plurality of access devices performs a decode algorithm to decode said received signals.

36. The communication network of claim 32 wherein said code processing circuit of said at least one of said plurality of access devices compares said received signals to stored image signals located in an image database to decode said received signals.

37. The communication network of claim 32 wherein said code processing circuit of said at least one of said plurality of access devices performs a decode algorithm to decode said received signals, and, if unsuccessful, compares said received signals to stored image signals

RECTIFIED SHEET (RULE 91)

located in an image database to decode said received signals.

38. The communication network of claim 32 wherein said code processing circuit of said at least one of said plurality of access devices compares said received signals to stored image signals located in an image database to decode said received signals, and, if unable to find stored image signals which correspond to said received signals, performs a decode algorithm to decode said received signals.

39. The communication network of claim 38 wherein said code processing circuit of said at least one of said plurality of access devices updates said image database by storing the received signals if the performance of the decode algorithm is successful.

40. A processing device in a communication network, said processing device comprising a mobile terminal device having at least one two-dimensional code reading device configured with a first wireless transceiver, said processing device further comprising:

a second wireless transceiver for receiving signals representative of two-dimensional images captured by a two-dimensional code reading device;

a code processing circuit for decoding the signals received from the two-dimensional code reading device; and

AUSTRALIAN PATENT OFFICE

said code processing circuit delivering to the two-dimensional code reading device via said second wireless transceiver an indication of successful image decoding.

41. The processing device of claim 40 further comprising an image database for storing signals representative of two-dimensional images.

42. The communication network of claim 41 wherein said code processing circuit of said processing device compares said received signals to stored signals representative of two-dimensional images located in the image database to decode said received signals.

43. The communication network of claim 40 wherein said code processing circuit of said processing device performs a decode algorithm to decode said received signals.

44. The processing device of claim 40 further comprising an image database for storing signals representative of two-dimensional images, and wherein said code processing circuit of said processing device performs a decode algorithm to decode said received signals, and, if unsuccessful, compares said received signals to stored image signals located in the stored image database to decode said received signals.

RECTIFIED SHEET (RULE 91)

45. The processing device of claim 40 further comprising an image database for storing signals representative of two-dimensional images, and wherein said code processing circuit of said at least one of said plurality of access devices compares said received signals to stored image signals located in the stored image database to decode said received signals, and, if unable to find stored image signals which correspond to said received signals, performs a decode algorithm to decode said received signals.

46. The communication network of claim 45 wherein said code processing circuit of said processing device updates said image database by storing the received signals if the performance of the decode algorithm is successful.

47. A communication network substantially as herein described and as shown in the accompanying drawings.

DATED this Thirteenth Day of November 1998

Norand Corporation

Patent Attorneys for the Applicant

SPRUSON & FERGUSON

AUSTRALIAN PATENT OFFICE

FIG. 1A

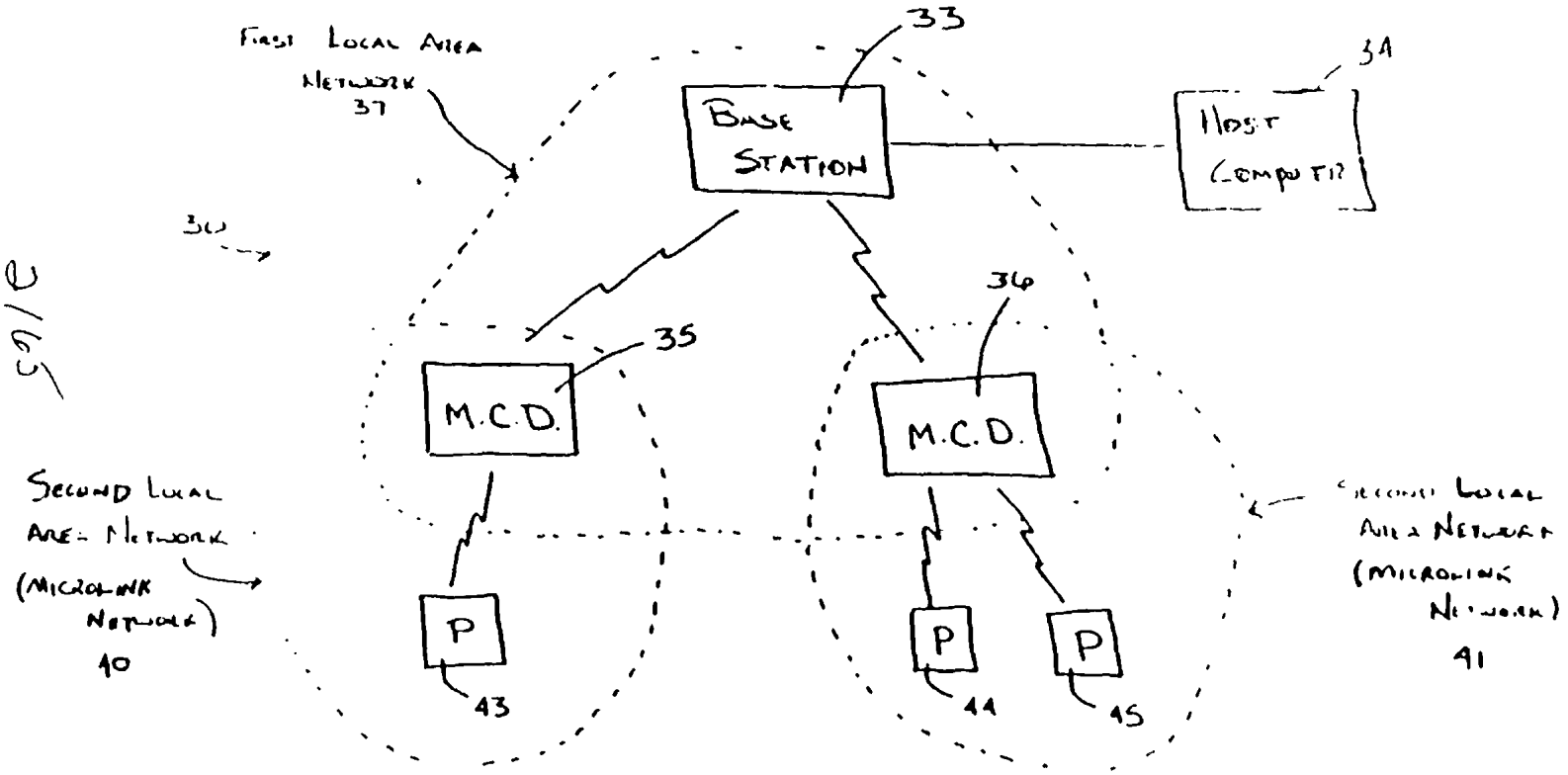
First Local Area Network 37
33
Base Station
34
Host Computer
30
36
35
M.C.D.
M.C.D.
Second Local Area Network (Microlink Network) 40
Second Local Area Network (Microlink Network) 41
P
P
P
43
44
45
MCD = Mobile Computing Device
P = Peripheral Device

Fig 1B

MCD : Mobile Computing Device

P : Peripheral Device

Fig. 11

201
203
205
207
SYNC
Reservation Phase
Sessions
optional TDMA Slots
200

FIGURE 2

FIGURE 3a

FIGURE 3b

Freq 1: 2466 MHz		Freq 2: 2411 MHz		Freq 3: 2417 MHz		Freq 5 2444 MHz	
Al. 1 20 ms	Al. 2 20 ms	Al. 1 20 ms	Al. 2 20 ms	Al. 1 20 ms	Al. 2 20 ms	Al. 1 20 ms	Al. 2 20 ms

401

FIGURE 4a

Freq 1: 2466 MHz				Freq 2: 2411 MHz			
Al. 1 20 ms	Al. 2 20 ms	Al. 3 20 ms	Al. 4 20 ms	Al. 1 20 ms	Al. 2 20 ms	Al. 3 20 ms	Al. 4 20 ms

401

FIGURE 4b

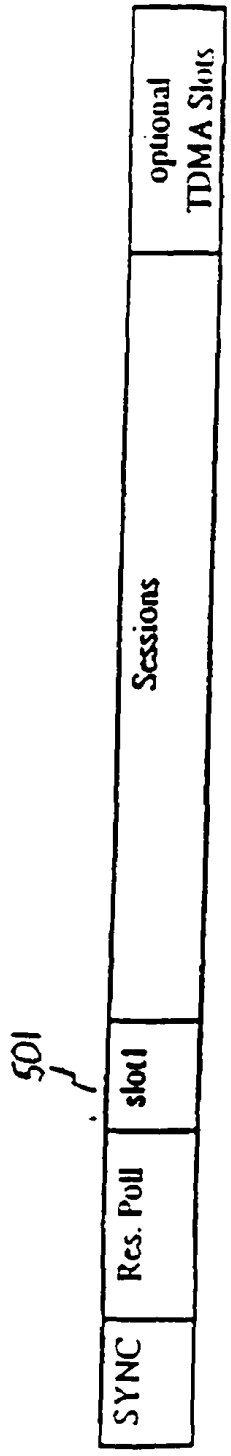

FIGURE 5a

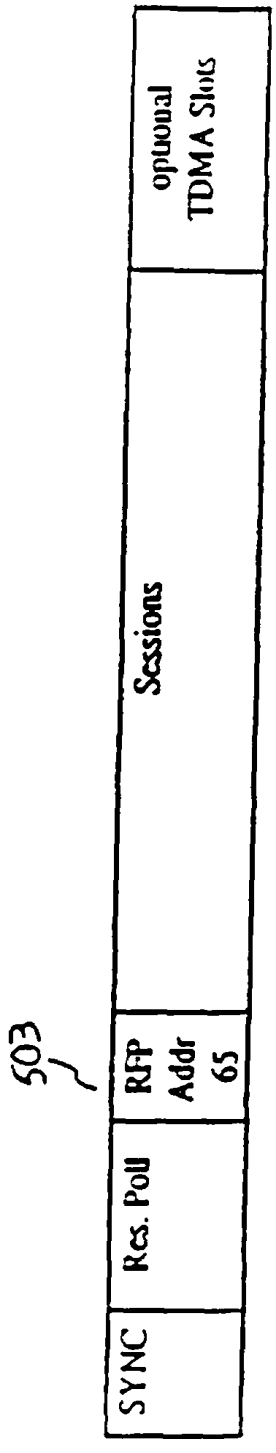

FIGURE 5b

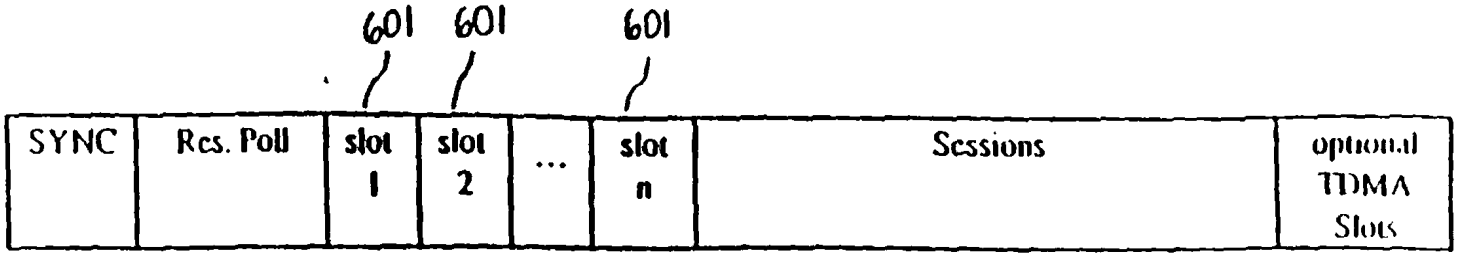

FIGURE 6a

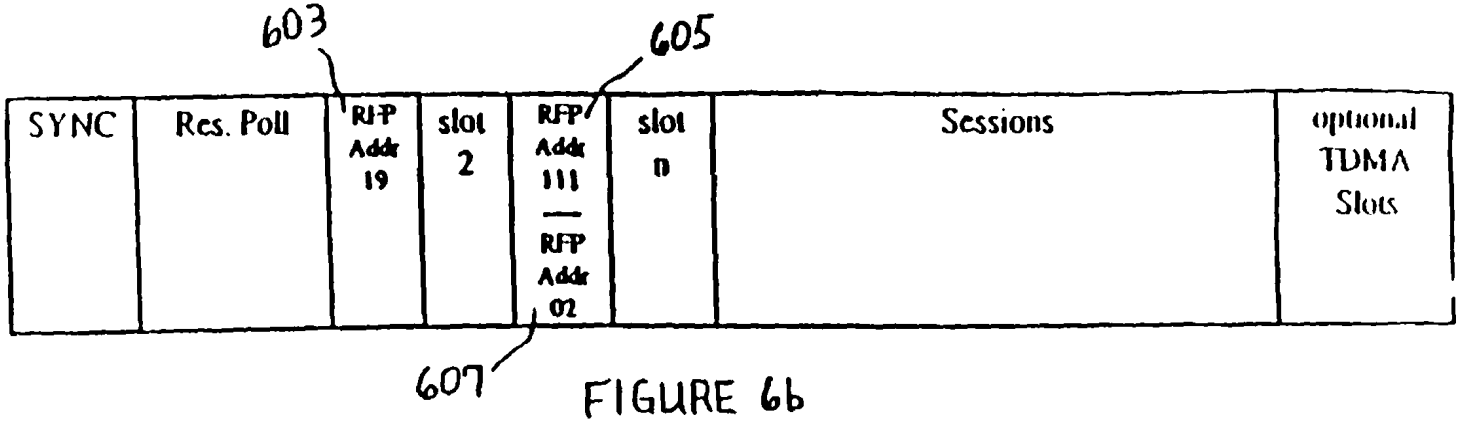

FIGURE 6b

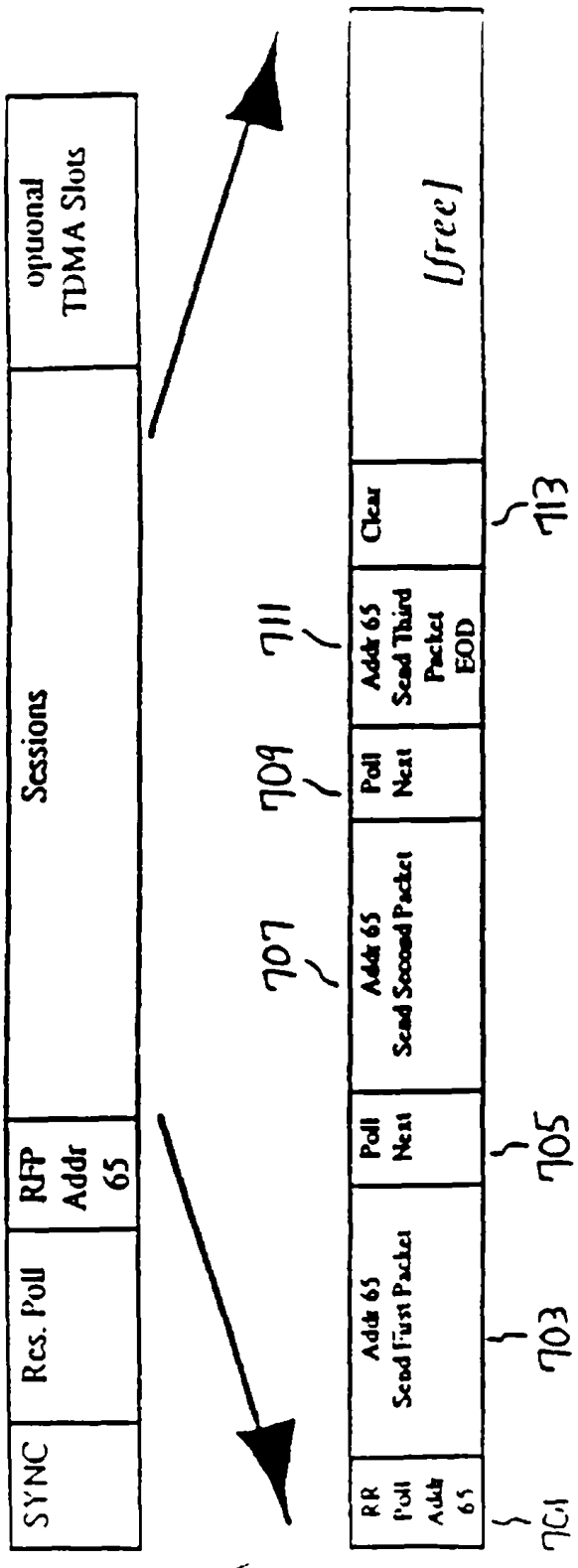
SYNC
Res. Poll
RFP Addr 65
Sessions
optional TDMA Slots
RR Poll Addr 65
Addr 65 Send First Packet
Poll Next
Addr 65 Send Second Packet
Poll Next
Addr 65 Send Third Packet EOD
Clear
[free]
701
703
705
707
709
711
713
9165

FIGURE 7a

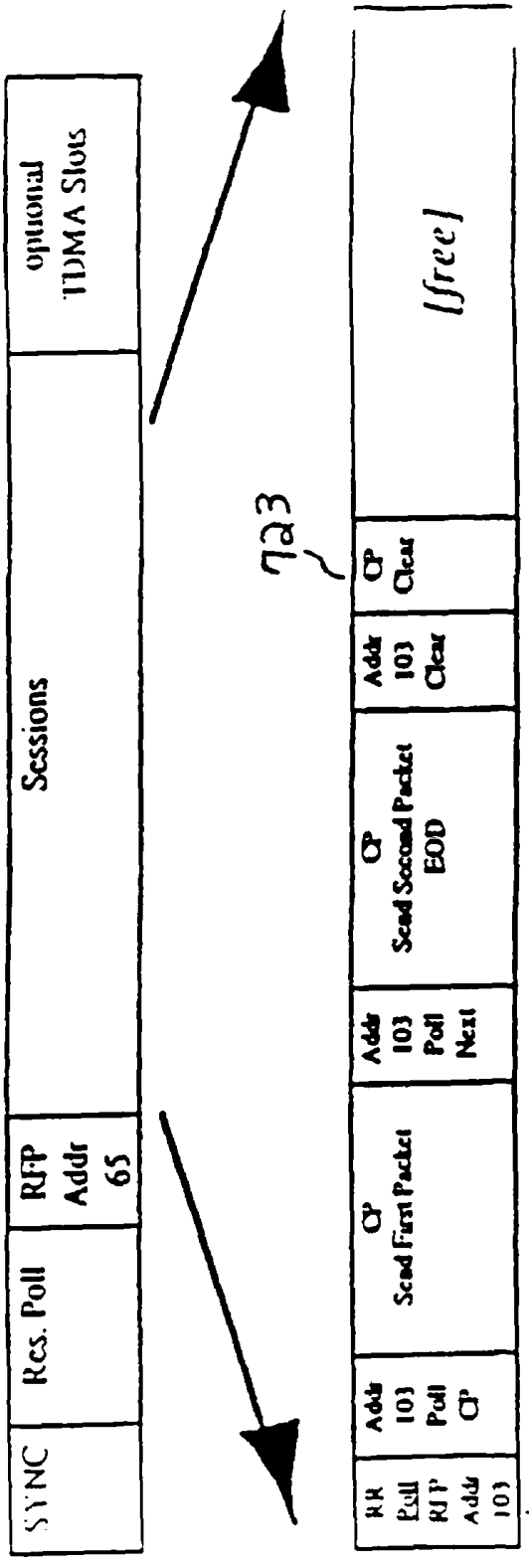
SYNC
Res. Poll
RFP Addr 65
Sessions
optional TDMA Slots
RR Poll RFP Addr 103
Addr 103 Poll CP
CP Send First Packet
Addr 103 Poll Next
CP Send Second Packet EOD
Addr 103 Clear
CP Clear
[free]
721
723

FIGURE 7b

FIGURE 8

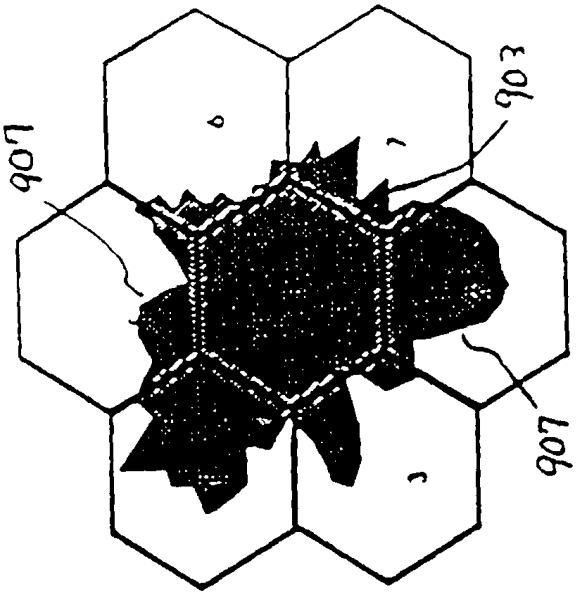

FIGURE 9b

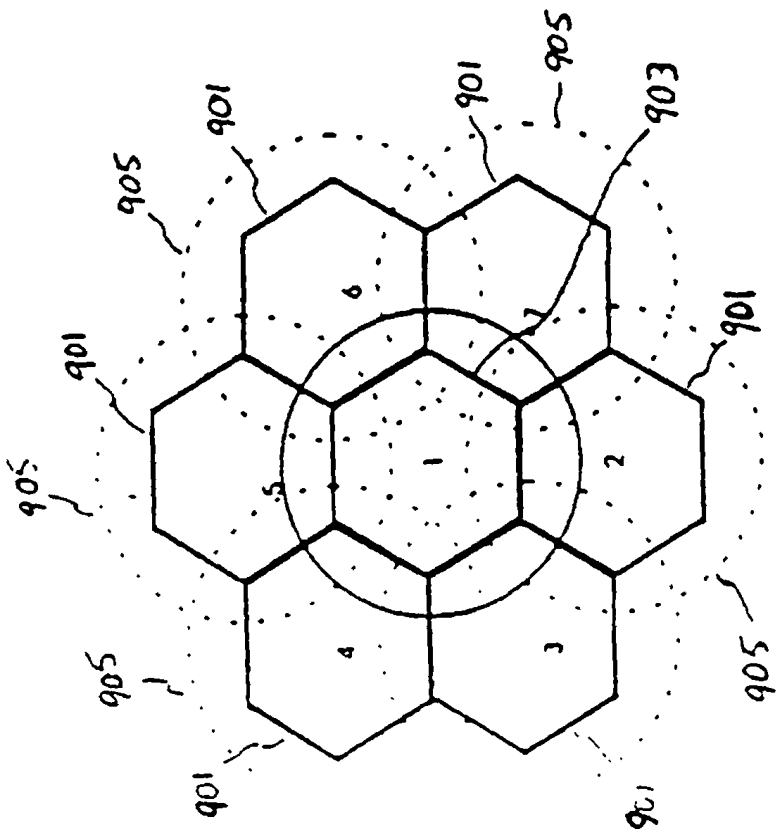

FIGURE 9a

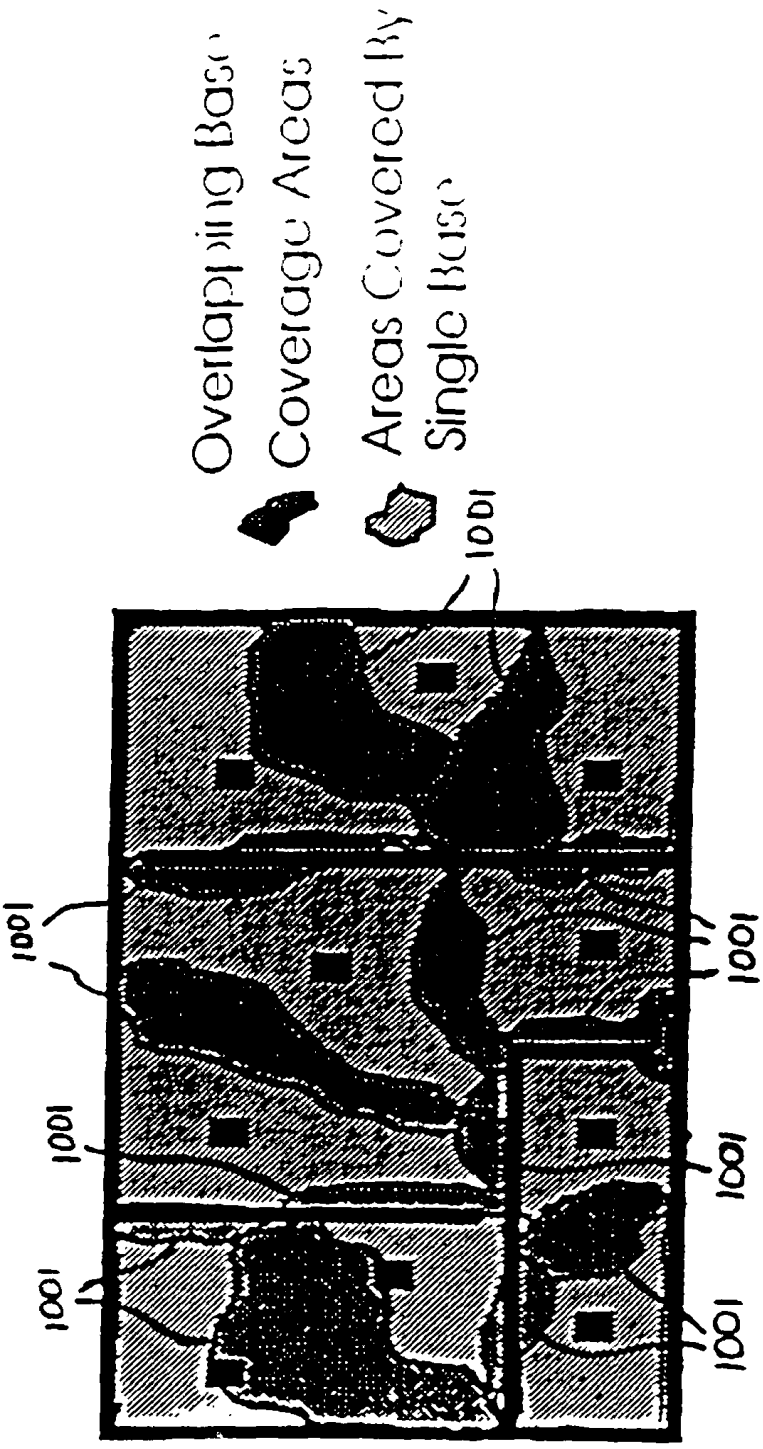
Overlapping Base
Coverage Areas
Areas Covered By
Single Base
1001
1001
1001
1001
1001
1001

FIGURE 10

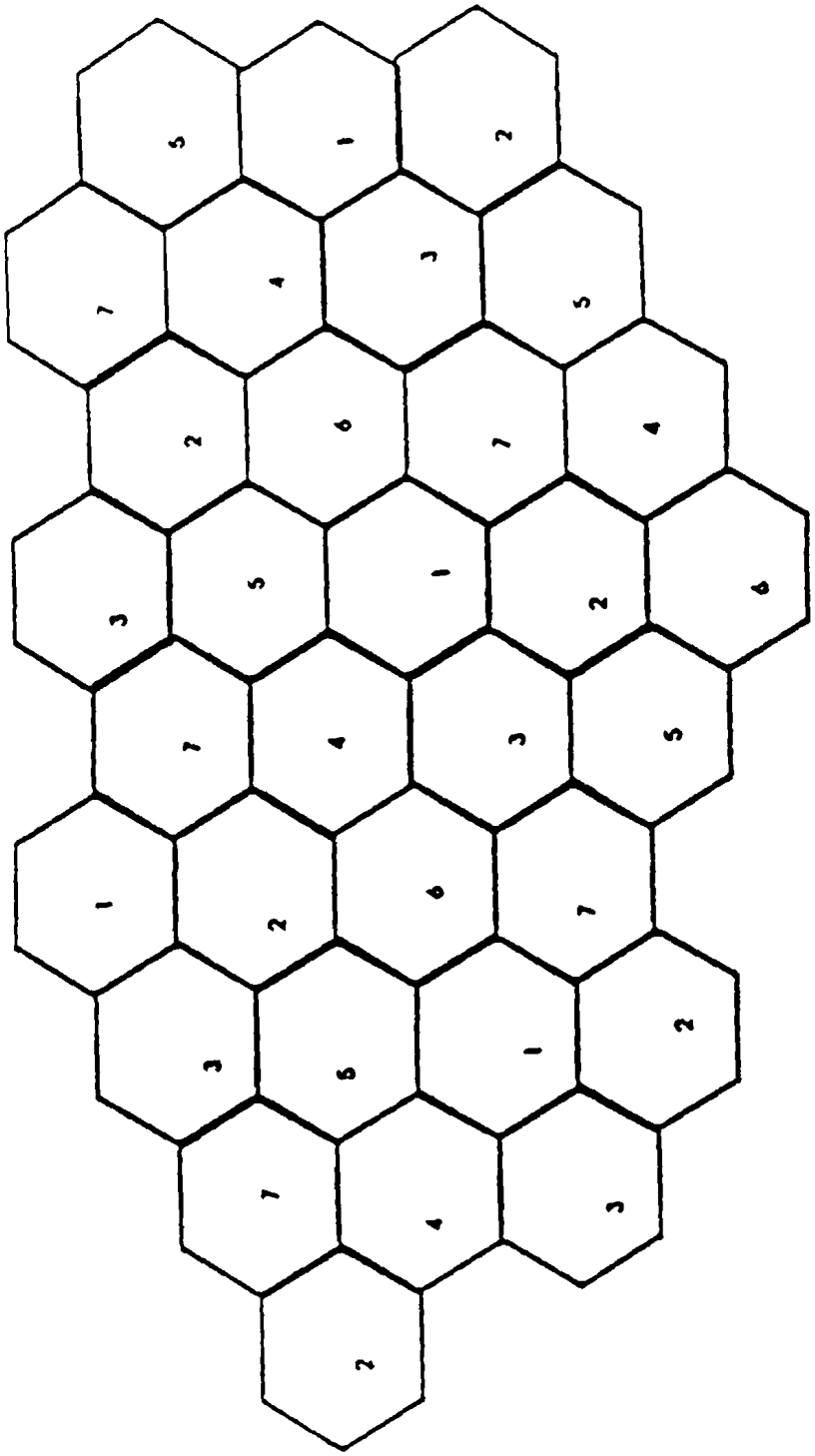

FIGURE 11

1203
1201
Base
Base
Base
wireless link
Base
Base
1205
Master
Slave
1207
Building "A" LAN
1209
Building "B" LAN

FIGURE 12

Base
Base
Base
1303
wireless link
1301
Wireless Base
Master
1305
1307
Wired LAN
Slave

FIGURE 13

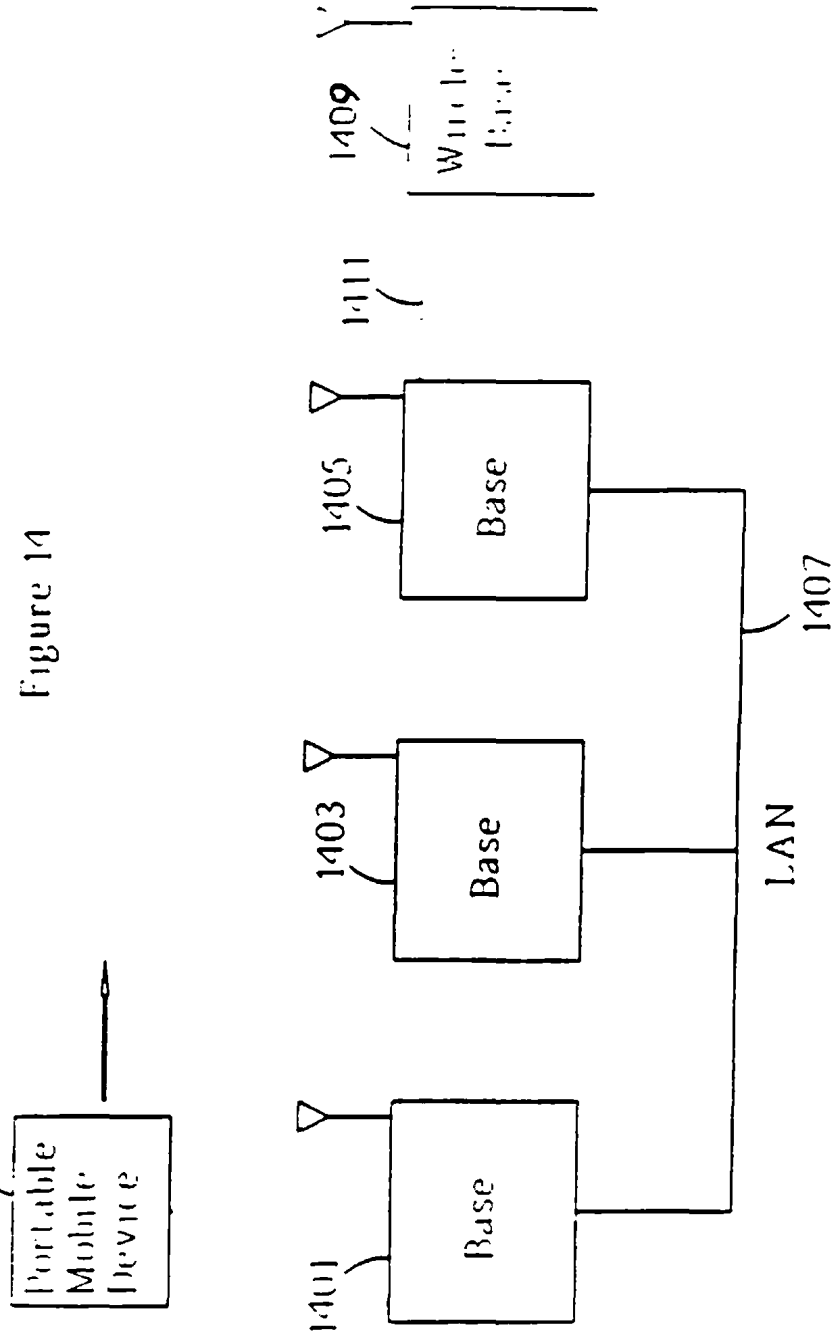
1409
1411
1405
Base
1407
1403
Base
LAN
1401
Base
1413
Portable
Mobile
Device

Figure 14

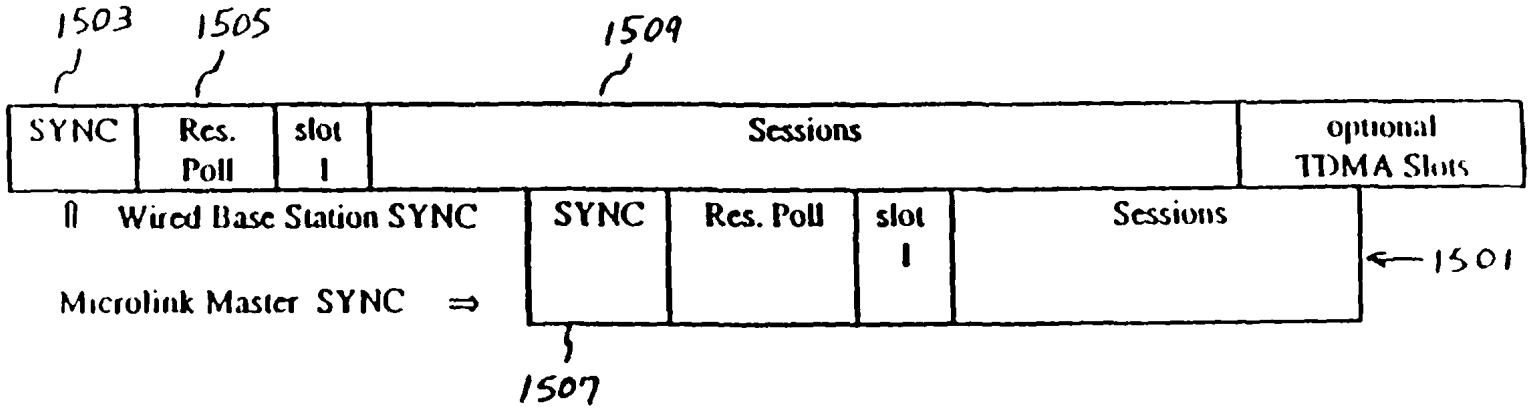
1503
1505
1509
SYNC
Res. Poll
slot 1
Sessions
optional TDMA Slots
Wired Base Station SYNC
Microlink Master SYNC
SYNC
Res. Poll
slot 1
Sessions
1501
1507

FIGURE 15

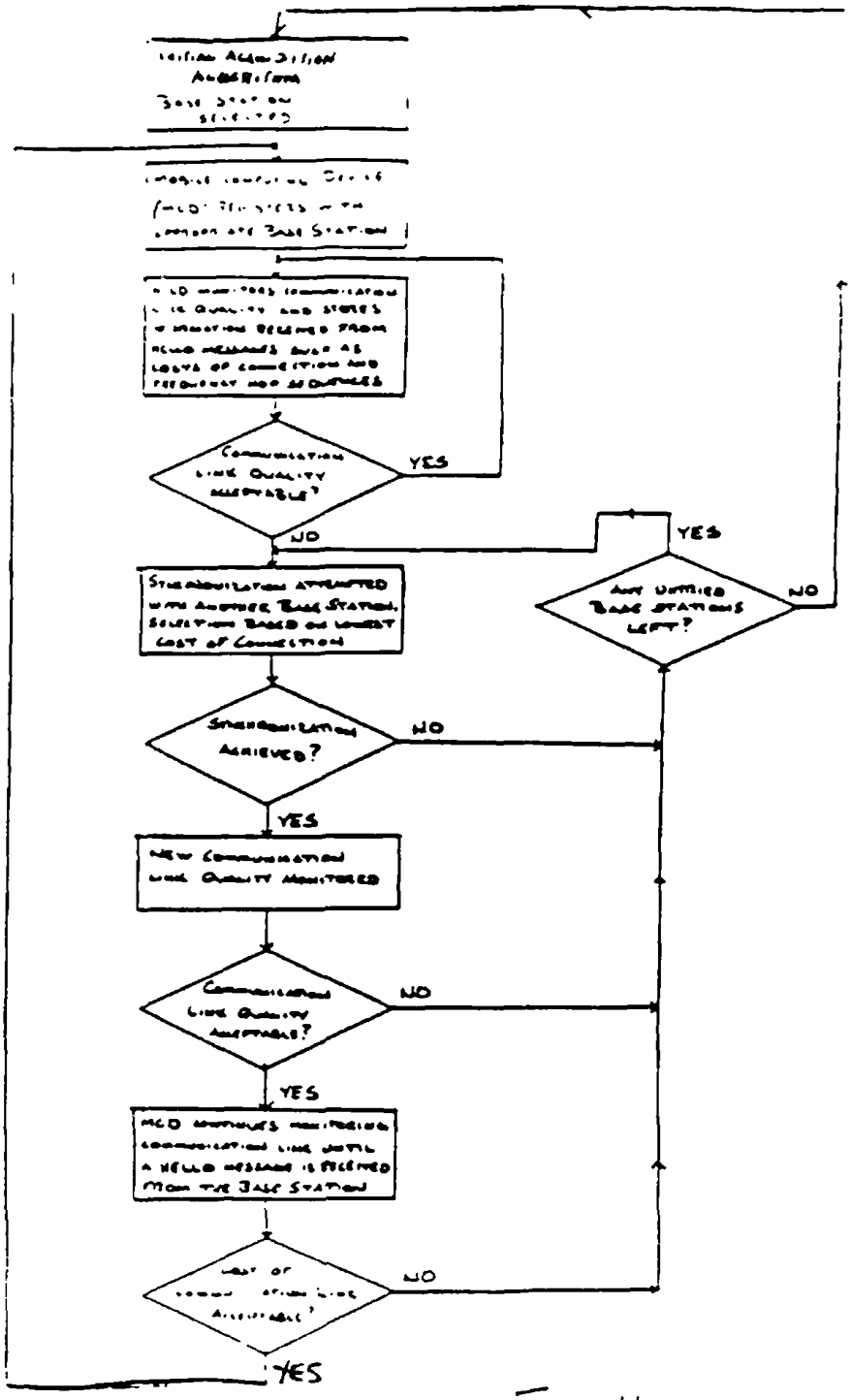

FIG. 16

19/67

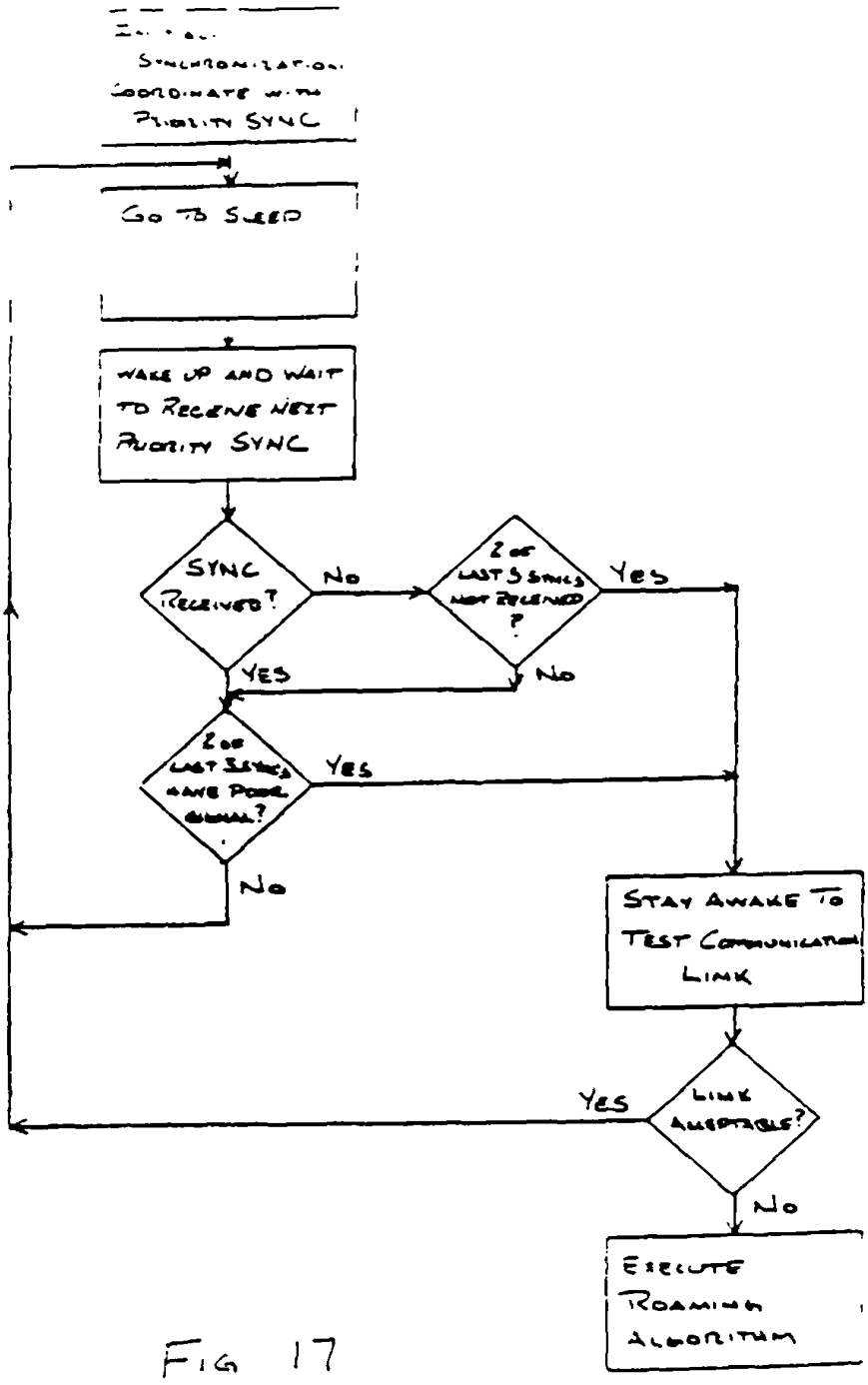
SYNCHRONIZATION
COORDINATE WITH
PRIORITY SYNC
GO TO SLEEP
WAKE UP AND WAIT
TO RECEIVE NEXT
PRIORITY SYNC
SYNC
RECEIVED?
No
2 OF
LAST 5 SYNCS
NOT RECEIVED
?
Yes
Yes
No
2 OF
LAST 3 SYNCS
HAVE POOR
SIGNAL?
Yes
No
STAY AWAKE TO
TEST COMMUNICATION
LINK
LINK
ACCEPTABLE?
Yes
No
EXECUTE
ROAMING
ALGORITHM

FIG 17

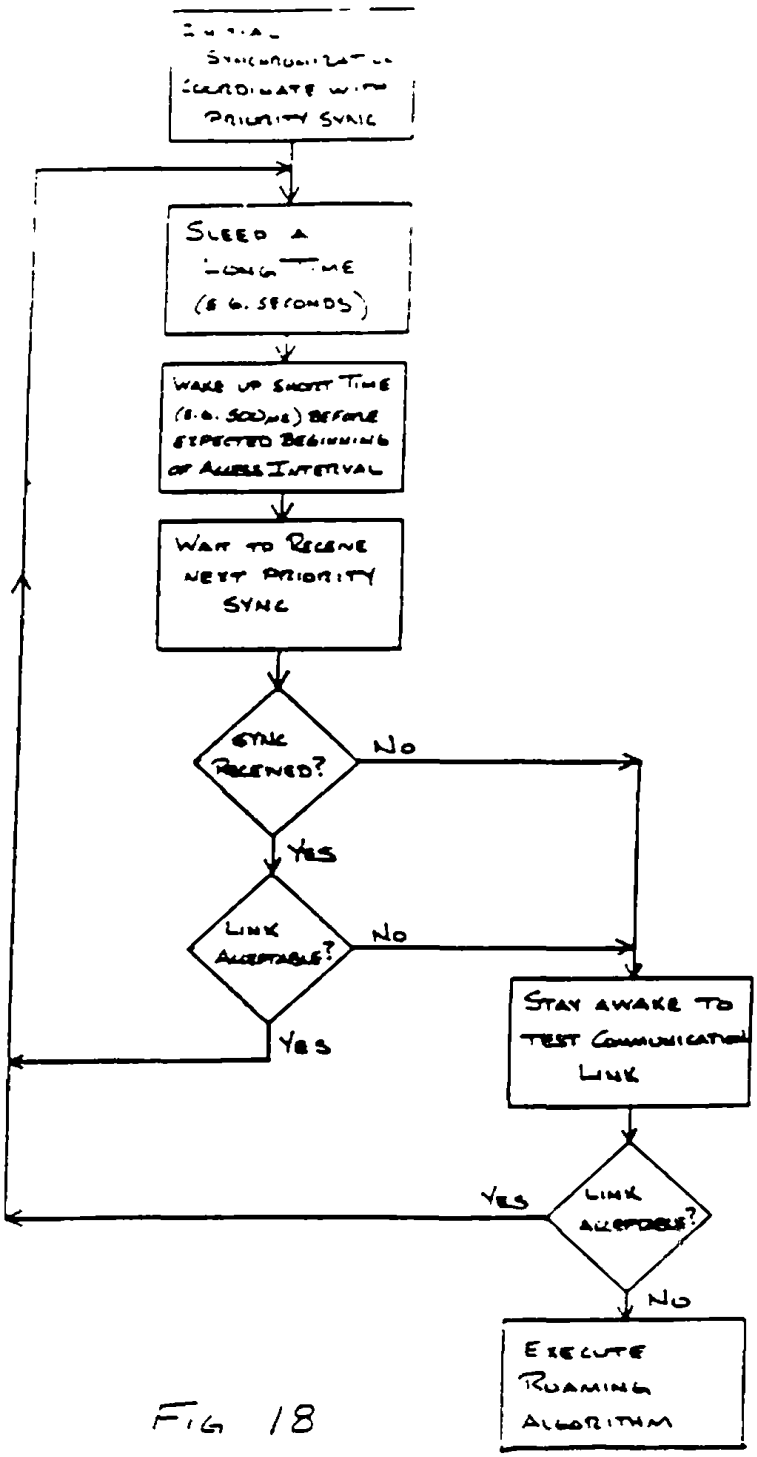
INITIAL SYNCHRONIZATION / COORDINATE WITH PRIORITY SYNC
SLEEP A LONG TIME (E.G. 5 SECONDS)
WAKE UP SHORT TIME (E.G. 500 μs) BEFORE EXPECTED BEGINNING OF ALLESS INTERVAL
WAIT TO RECEIVE NEXT PRIORITY SYNC
SYNC RECEIVED?
NO
YES
LINK ACCEPTABLE?
NO
YES
STAY AWAKE TO TEST COMMUNICATION LINK
LINK ACCEPTABLE?
YES
NO
EXECUTE ROAMING ALGORITHM

FIG 18

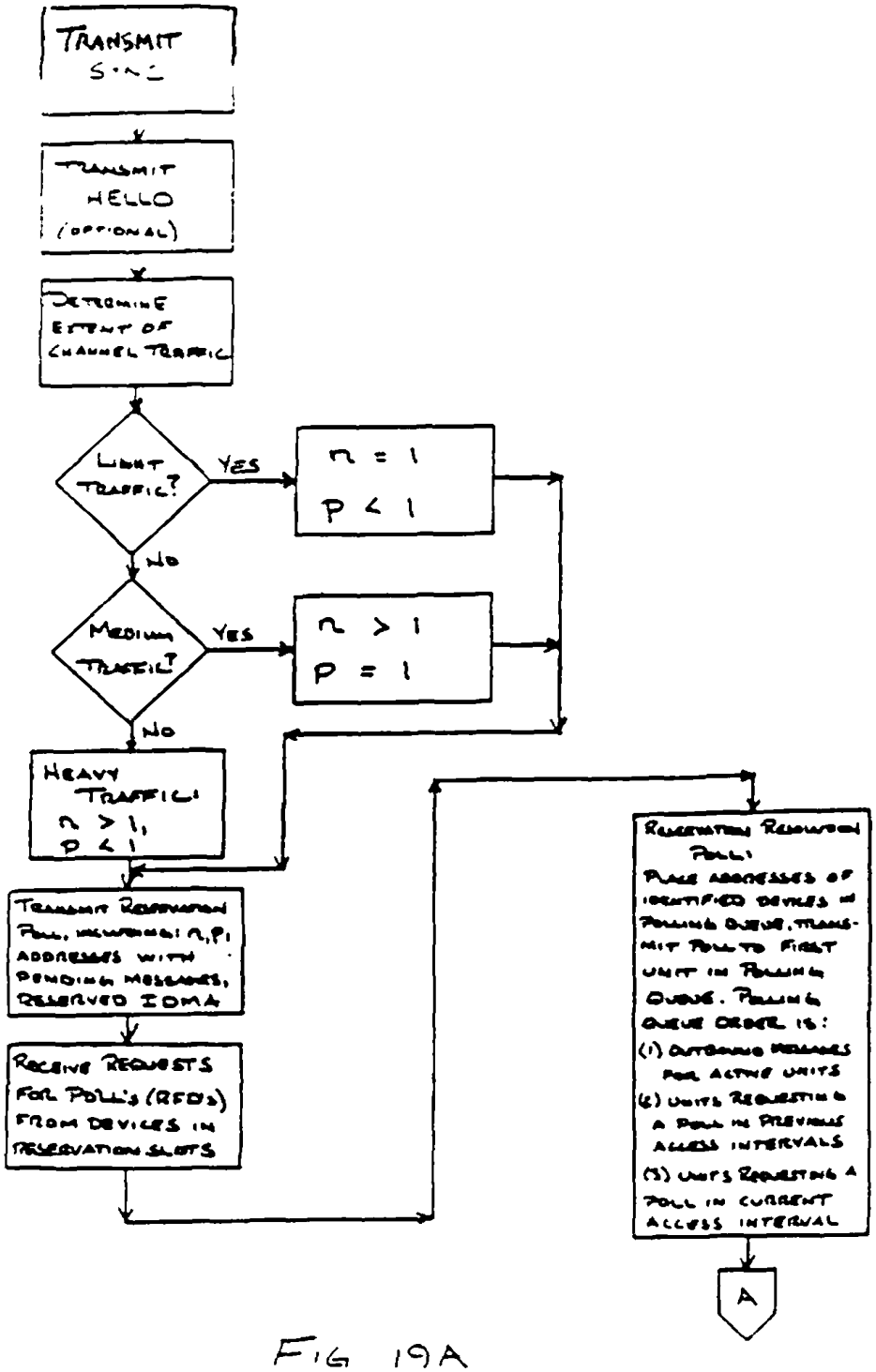
TRANSMIT SYNC
TRANSMIT HELLO (OPTIONAL)
DETERMINE EXTENT OF CHANNEL TRAFFIC
LIGHT TRAFFIC?
YES
n = 1
p < 1
NO
MEDIUM TRAFFIC?
YES
n > 1
p = 1
NO
HEAVY TRAFFIC!
n > 1,
p < 1
TRANSMIT RESERVATION POLL, INCLUDING n, p, ADDRESSES WITH PENDING MESSAGES, RESERVED IDMA
RECEIVE REQUESTS FOR POLLS (REQs) FROM DEVICES IN RESERVATION SLOTS
RESERVATION RESOLUTION POLL:
PLACE ADDRESSES OF IDENTIFIED DEVICES IN POLLING QUEUE. TRANSMIT POLL TO FIRST UNIT IN POLLING QUEUE. POLLING QUEUE ORDER IS:
(1) OUTSTANDING MESSAGES FOR ACTIVE UNITS
(2) UNITS REQUESTING A POLL IN PREVIOUS ACCESS INTERVALS
(3) UNITS REQUESTING A POLL IN CURRENT ACCESS INTERVAL
A

FIG 19A

22/65

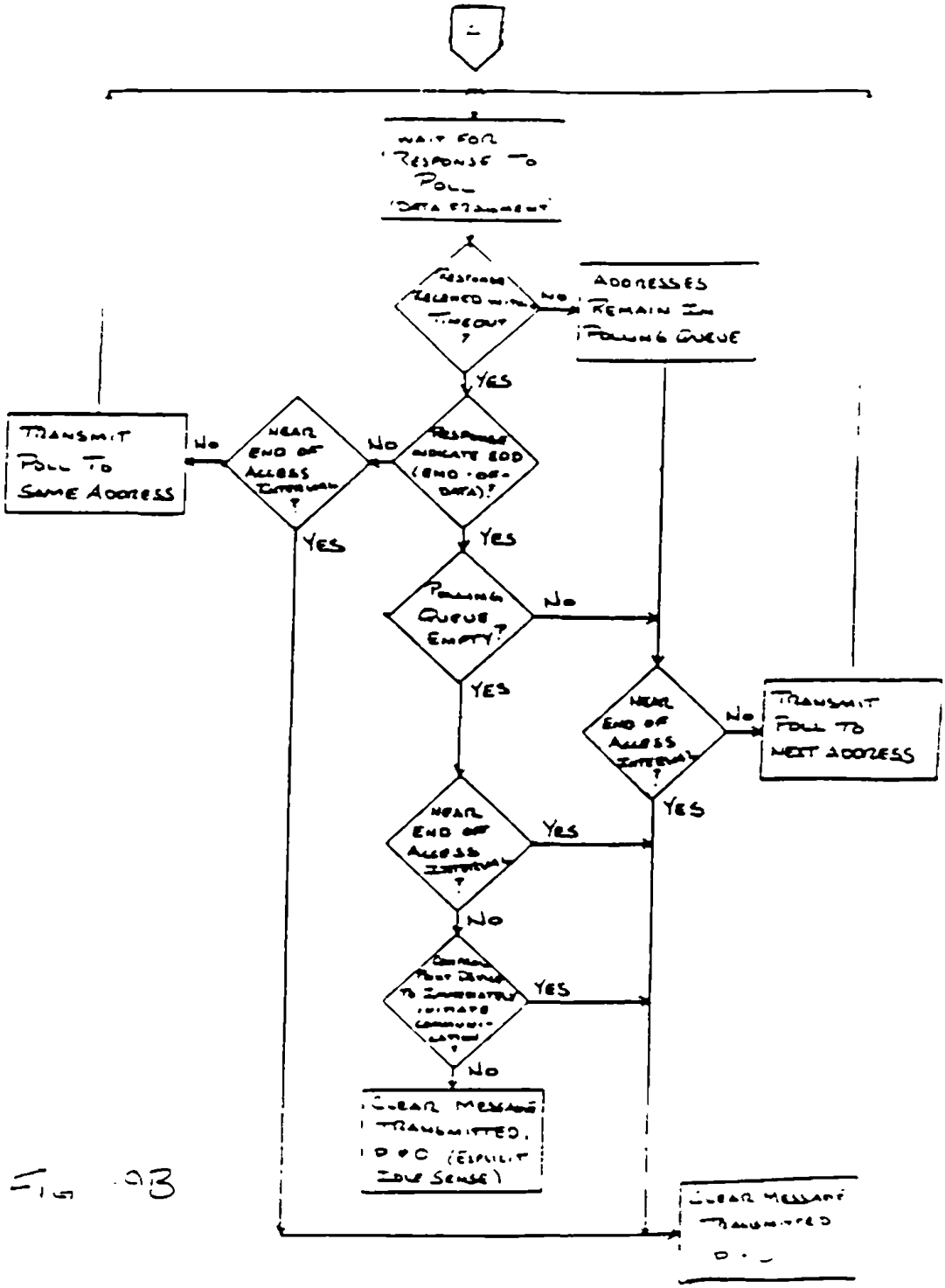
WAIT FOR RESPONSE TO POLL DATA STATEMENT
RESPONSE RECEIVED WITHIN TIMEOUT ?
No
ADDRESSES REMAIN IN POLLING QUEUE
YES
TRANSMIT POLL TO SAME ADDRESS
No
NEAR END OF ACCESS INTERVAL ?
No
RESPONSE INDICATE EOD (END-OF-DATA) ?
YES
YES
POLLING QUEUE EMPTY ?
No
YES
NEAR END OF ACCESS INTERVAL ?
No
TRANSMIT POLL TO NEXT ADDRESS
YES
NEAR END OF ACCESS INTERVAL ?
YES
No
YES
No
CLEAR MESSAGE TRANSMITTED. D • C (EXPLICIT IDLE SENSE)
CLEAR MESSAGE TRANSMITTED D • _

Fig. 9B

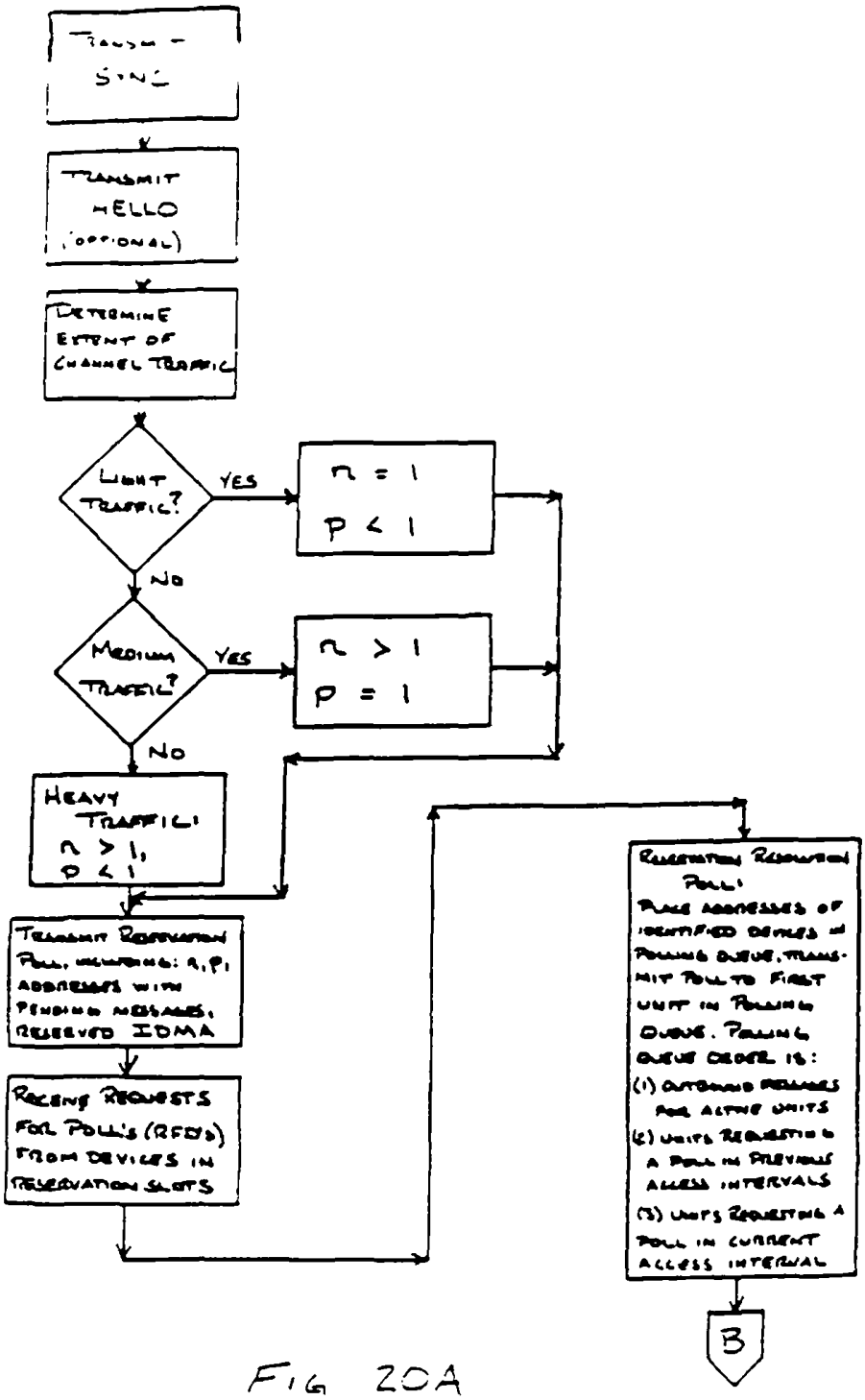

FIG 20A

14/105

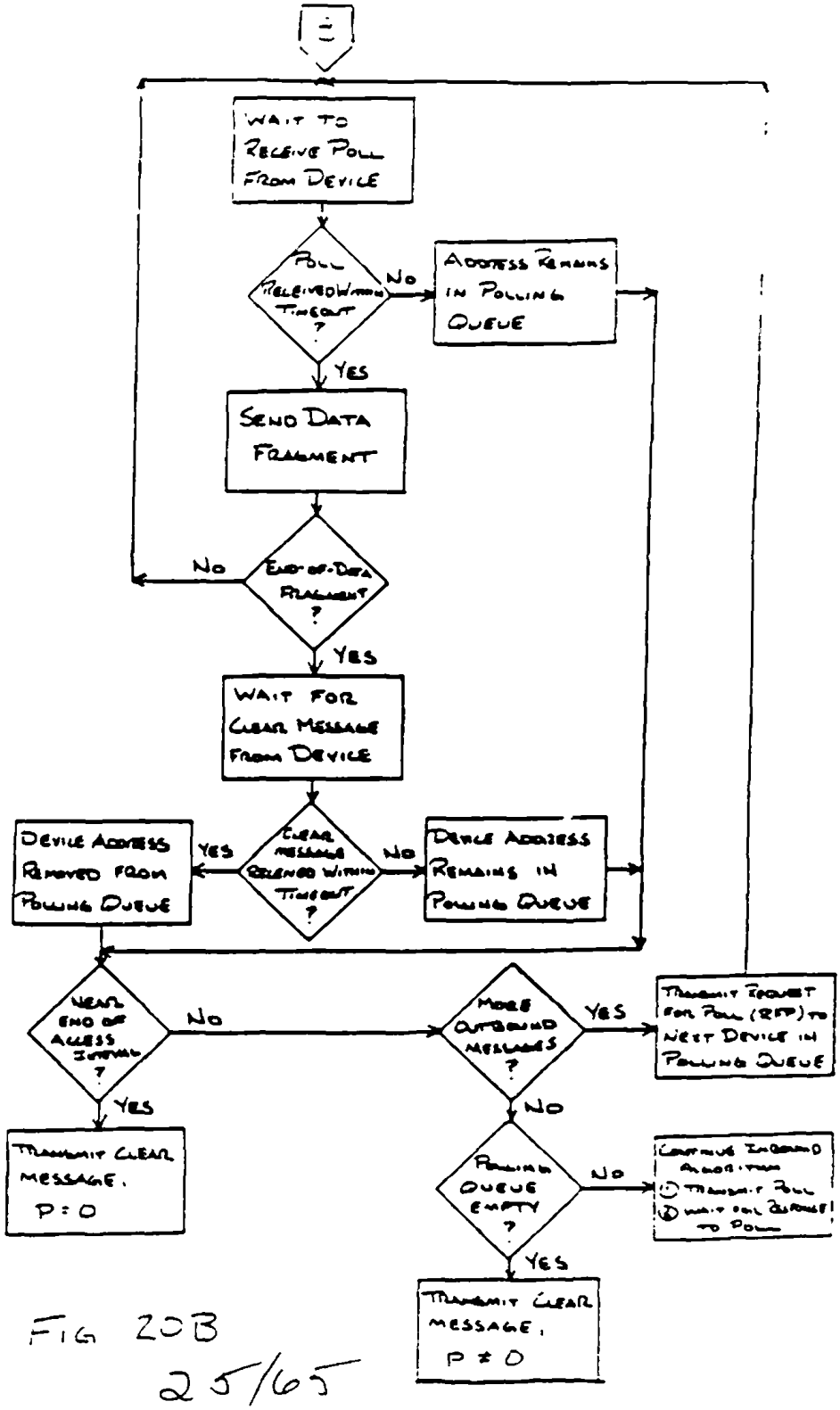
WAIT TO RECEIVE POLL FROM DEVICE
POLL RECEIVED WITHIN TIMEOUT ?
No
ADDRESS REMAINS IN POLLING QUEUE
YES
SEND DATA FRAGMENT
No
END-OF-DATA FRAGMENT ?
YES
WAIT FOR CLEAR MESSAGE FROM DEVICE
DEVICE ADDRESS REMOVED FROM POLLING QUEUE
YES
CLEAR MESSAGE RECEIVED WITHIN TIMEOUT ?
NO
DEVICE ADDRESS REMAINS IN POLLING QUEUE
NEXT END OF ACCESS INTERVAL ?
No
MORE OUTBOUND MESSAGES ?
YES
TRANSMIT REQUEST FOR POLL (RFP) TO NEXT DEVICE IN POLLING QUEUE
YES
TRANSMIT CLEAR MESSAGE. P=0
NO
POLLING QUEUE EMPTY ?
NO
YES
TRANSMIT CLEAR MESSAGE. P≠0

FIG 20B

25/65

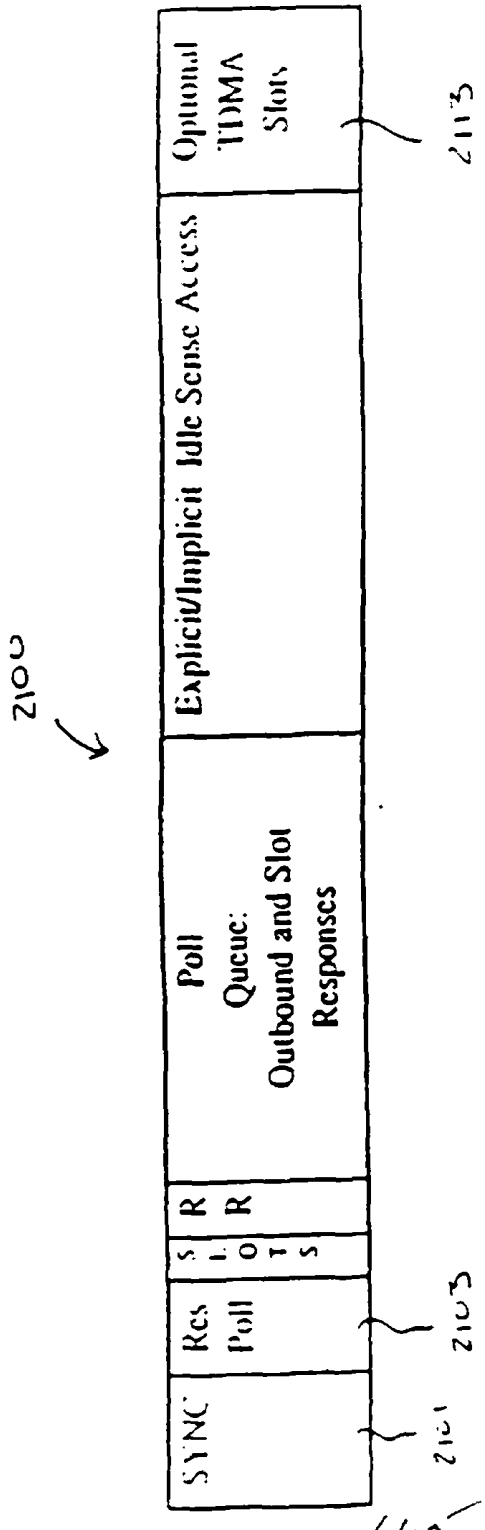
2100
SYNC
Res Poll
S L O T S
R R
Poll Queue: Outbound and Slot Responses
Explicit/Implicit Idle Sense Access
Optional TDMA Slots
2101
2103
2113

26/65

FIG. 21

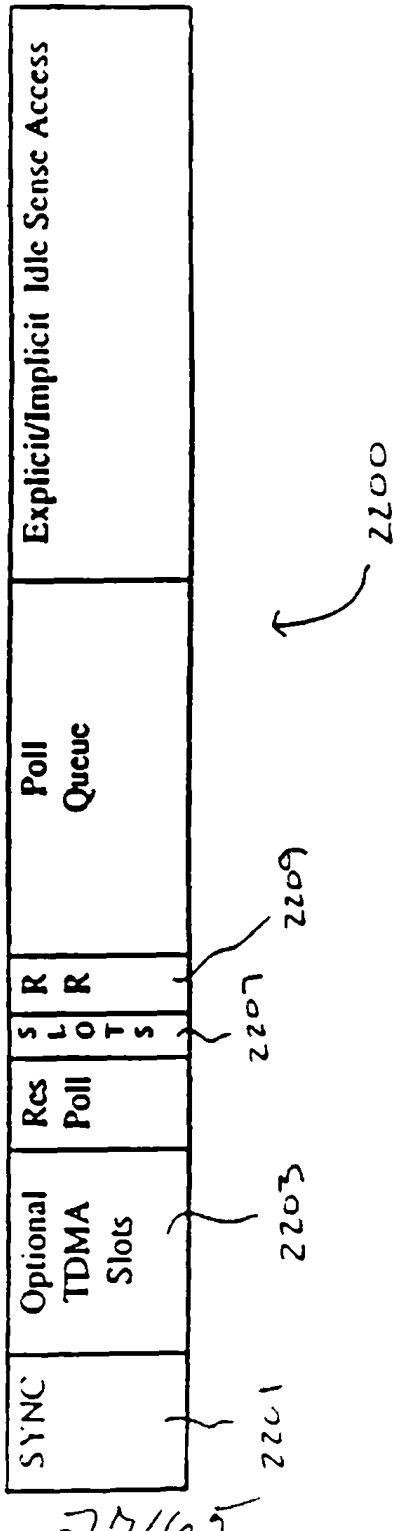
SYNC
Optional TDMA Slots
Res Poll
S L O T S
R R
Poll Queue
Explicit/Implicit Idle Sense Access
2201
2203
2207
2209
2200

27/65

Fig. 22

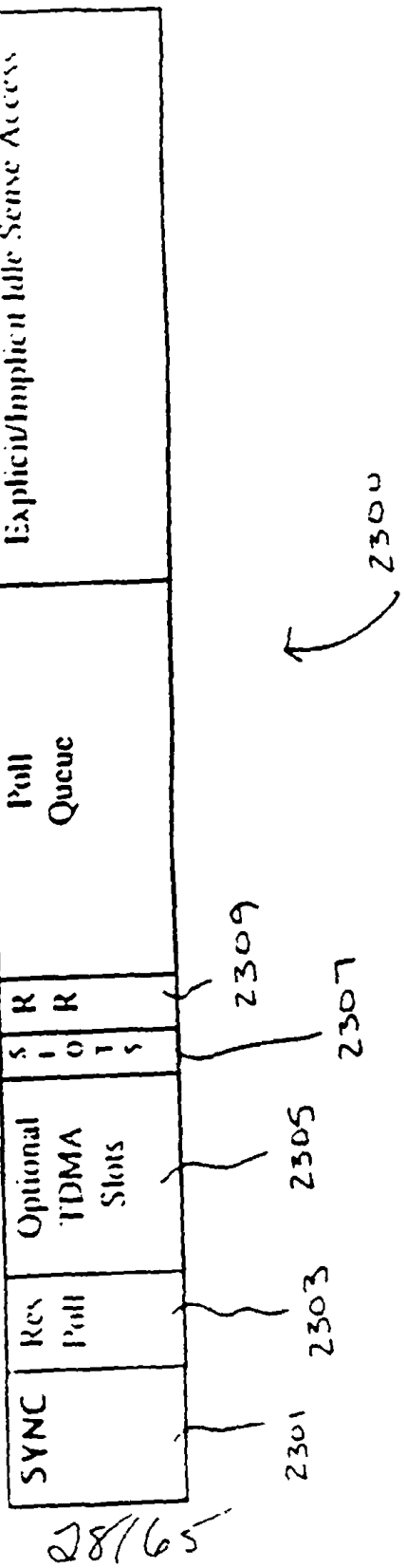
SYNC
Res Poll
Optional TDMA Slots
S I O T S
R R
Poll Queue
Explicit/Implicit Idle Sense Access
2301
2303
2305
2307
2309
2300
28165

FIG. 23

SYNC
Optional TDMA Slots
Poll Message Queue
Res Poll
SLOTS
RR
Poll Inbound Message Queue or Explicit/Implicit Idle Sense Access
2401
2403
2405
2400

Fig. 24

2500
2501
2503
2504
30/63
Preamble
SYNC
Res Poll
Freq Switching
Training and Acquistion
14 bytes
12 bytes
150 µsec →
⇐ 300 µsec ⇒
120 µs + +
110 µs + +

Fig. 25

SYNC

Byte	Content	Definition
1	FLAG	Frame Delimiter
2	Dest. Address 1	Destination Address (SYNC = Broadcast = $FFFF_H$)
3	Dest. Address 2	Destination Address, 2nd Byte
4	TYPE	Message Type = SYNC, Priority Sync, or Priority SYNC with HELLO
5	Source Address 1	Control Point Address
6	Source Address 2	Control Point Address, 2nd Byte
7*	SYSTEM ID	System Identifier (LAN ID)
8*	NET ID	Net ID
9*	Command/Status 1	Control Point Status
		2 Bits Control Point Type
		2 Bits Loading Factor
		1 Bit Scheduled Service Availability
		3 Bits Reserved
10*	Command/Status 2	Scheduled Services
		5 Bits Number of Allocated TDMA Time Slots
		3 Bits Number of Available Time Slots
11*	Random	Randomly Selected Character for Improved Encryption
12	CRC 1	Error Check
13	CRC 2	Error Check
14	FLAG	Frame Delimiter

* Optional Design Use

Fig. 26

PCT/US95/09380

2100

Reservation Poll

Byte	Content	Definition
1	FLAG	Frame Delimiter
2	Dest. Address 1	Destination Address (RES = Broadcast = $FFFF_H$)
3	Dest. Address 2	Destination Address, 2nd Byte
4	TYPE	Message Type = RES POLL
5	SLOT PARMS	3 Bits Number of Slots
6		5 Bits Probability Factor
7*	Sequence	Hopping Sequence ID
8*	Index	Hopping Sequence Index
9*	NET PARMS	
		3 Bits Hop Rate
		2 Bits AI's per Hop
		3 Bits Reserved
10	CRC 1	Error Check
11	CRC 2	Error Check
12	FLAG	Frame Delimiter

FIG 27

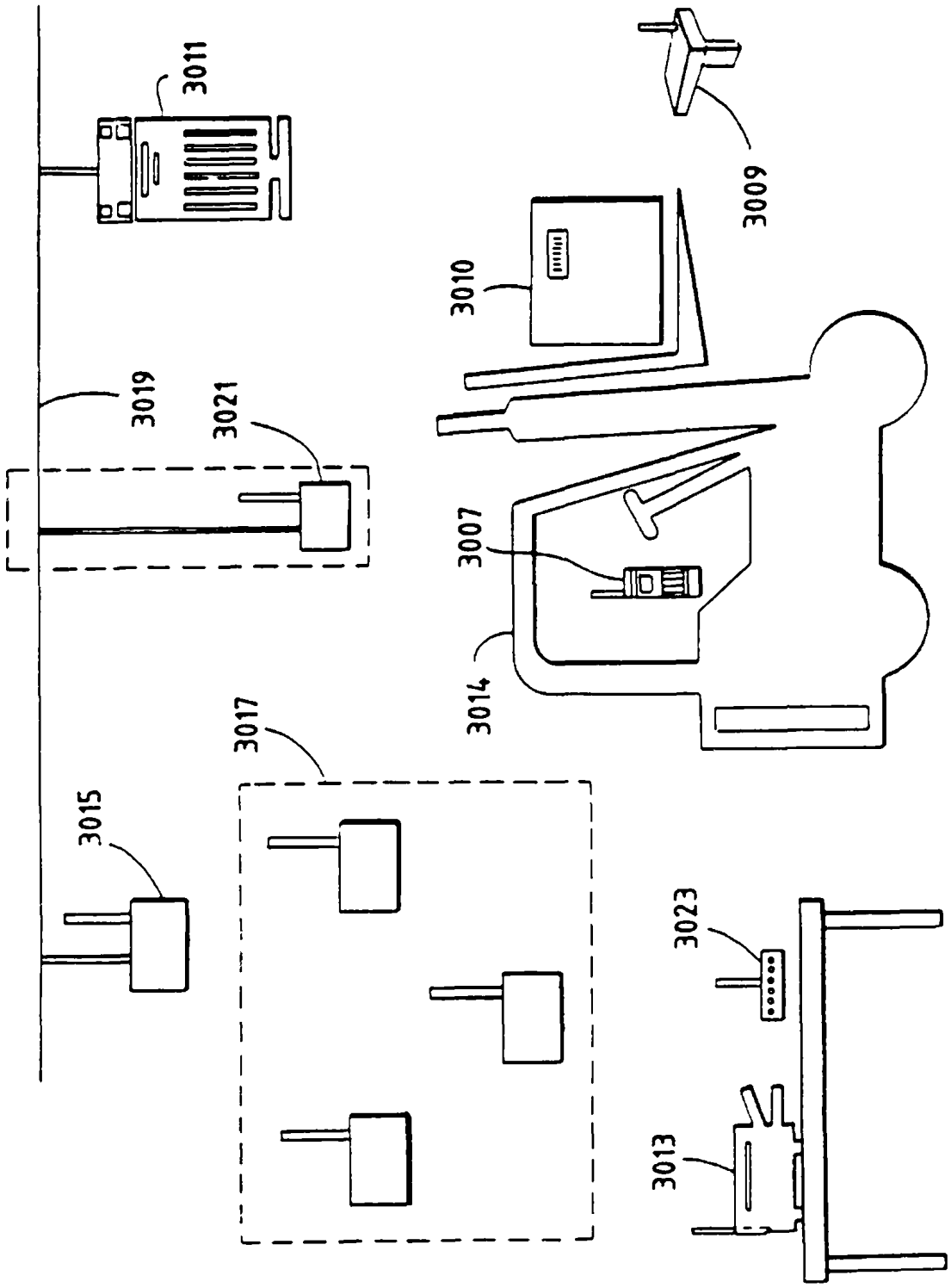

Fig. 28A

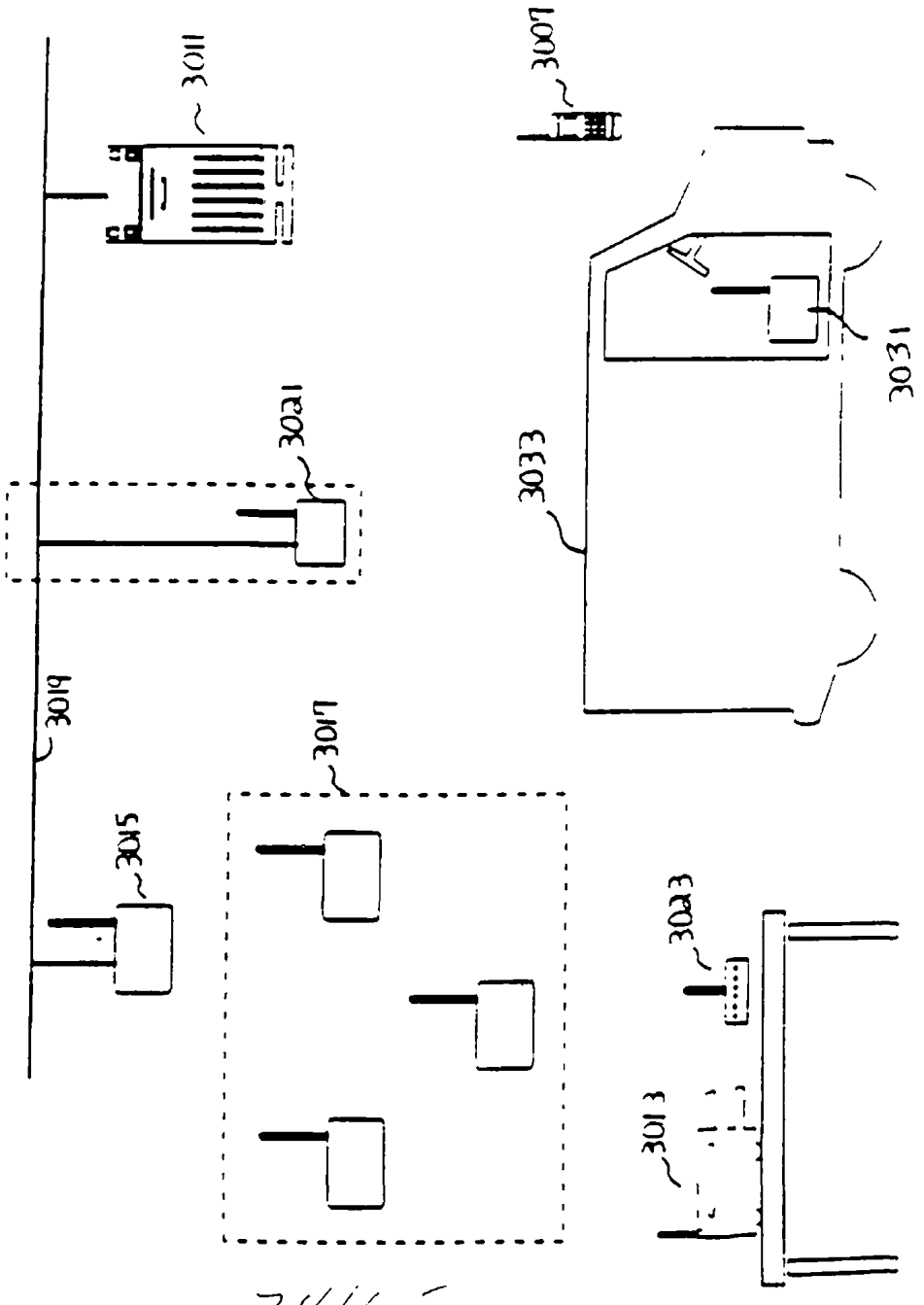
3011
3007
3021
3031
3033
3019
3017
3015
3023
3013

FIG. 28c

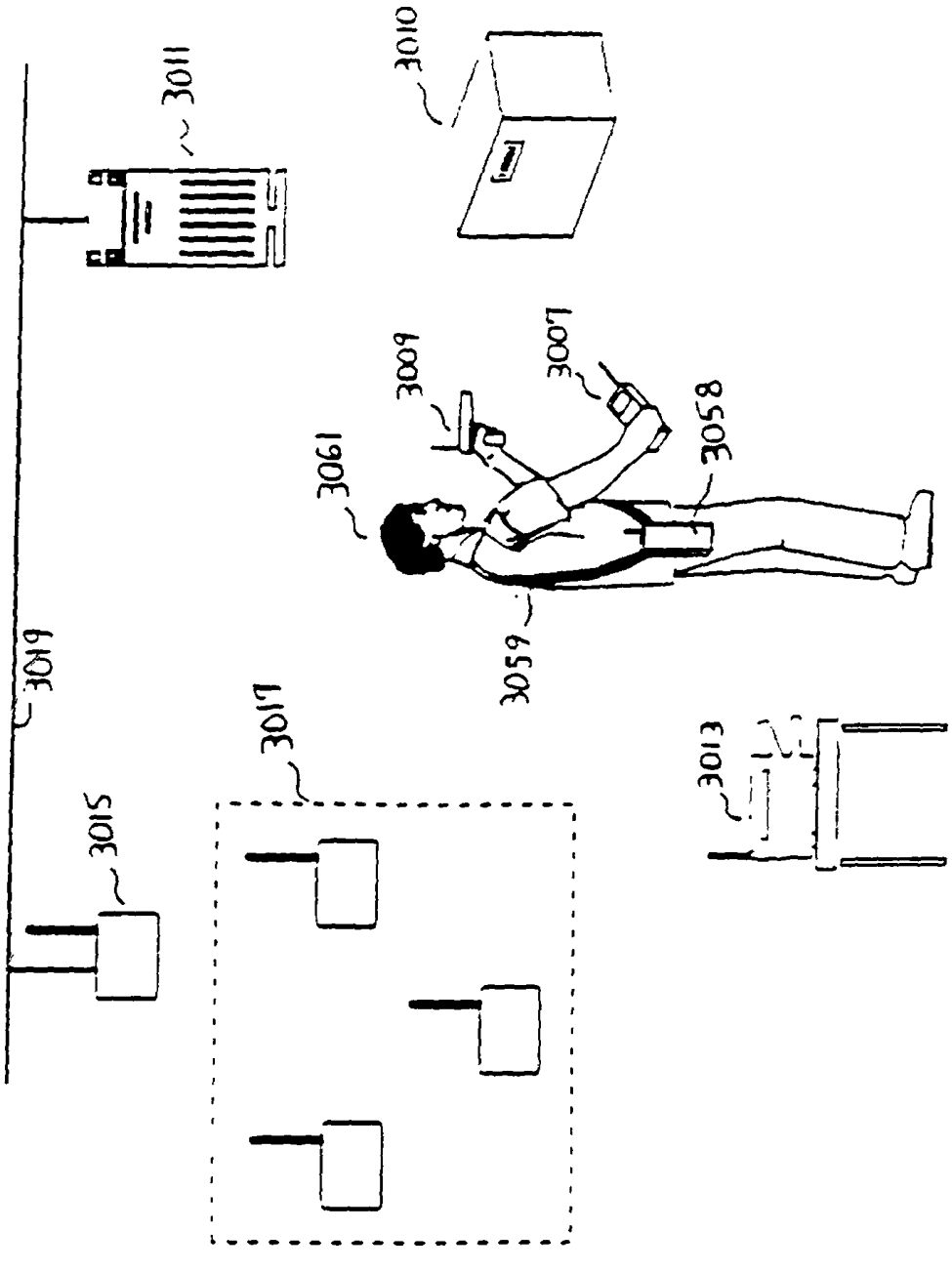
3010
3011
3009
3007
3058
3061
3059
3019
3017
3015
3013

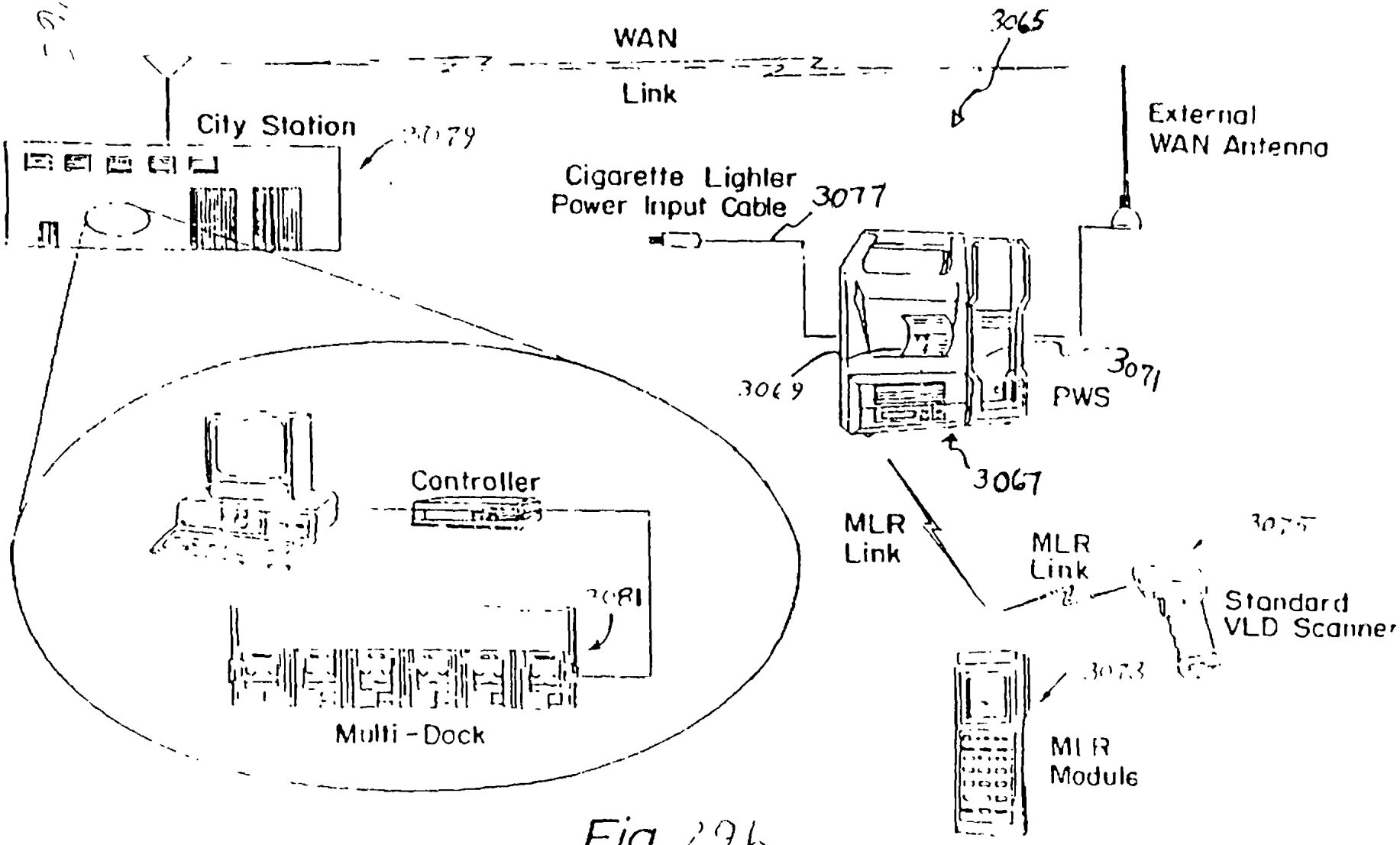
WAN
Link
3065
City Station
External
WAN Antenna
Cigarette Lighter
Power Input Cable
3077
3069
PWS
3071
3067
Controller
MLR
Link
MLR
Link
Standard
VLD Scanner
Multi - Dock
MLR
Module

Fig. 29b

3113
3110
RADIO
MICROPROCESSOR
INTERFACE
TXD
RXD
RTS
CTS
DCD
ADDRESS
3112
3120
3121
3115

FIG. 30

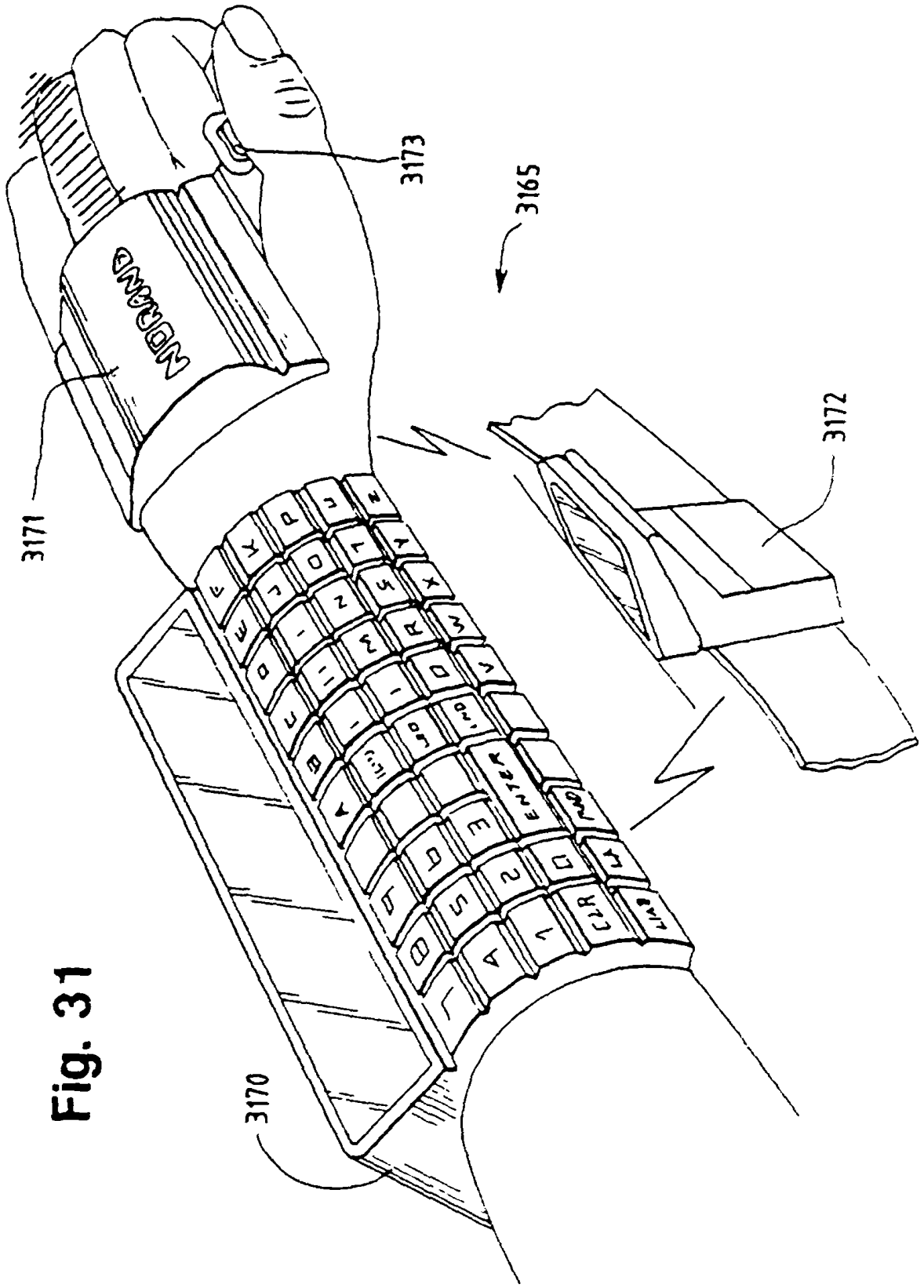

Fig. 31

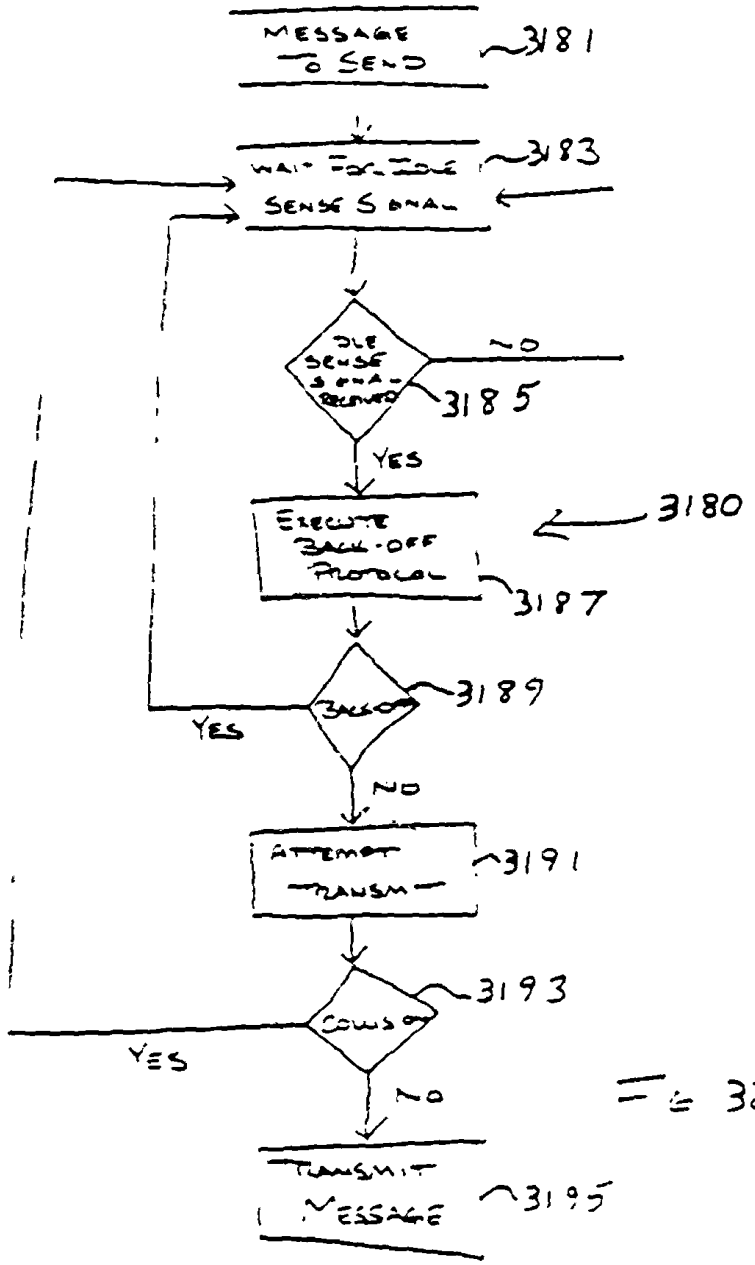
MESSAGE TO SEND
3181
WAIT FOR IDLE SENSE SIGNAL
3183
IDLE SENSE SIGNAL RECEIVED
NO
3185
YES
EXECUTE BACK-OFF PROTOCOL
3180
3187
BACKOFF
3189
YES
NO
ATTEMPT TRANSM
3191
COLLISION
3193
YES
NO
TRANSMIT MESSAGE
3195

Fig 32

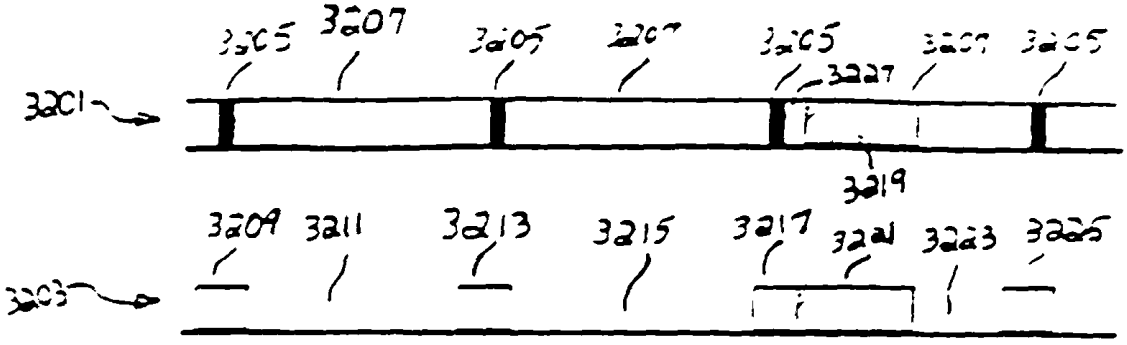

FIG. 33a

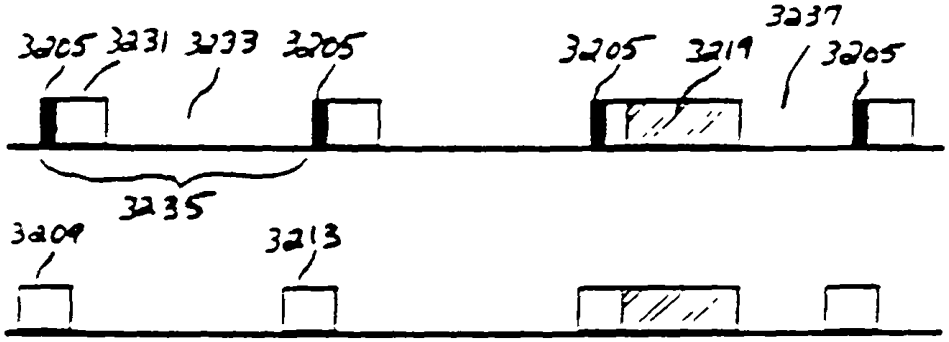

FIG. 33b

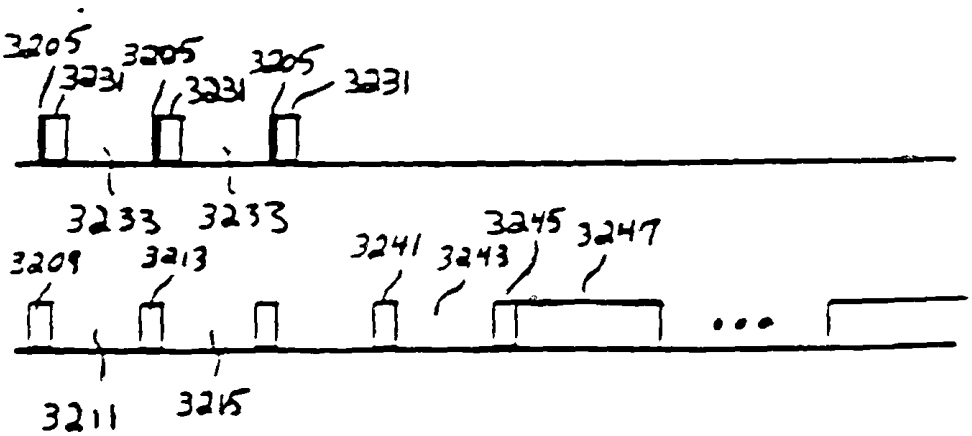

41/65 FIG. 33c

3261
3261
3269
3261
3261
3261
3257
3251
3263
3265
3267
3271
3253
3273
3275
3255
3259

FIG. 34

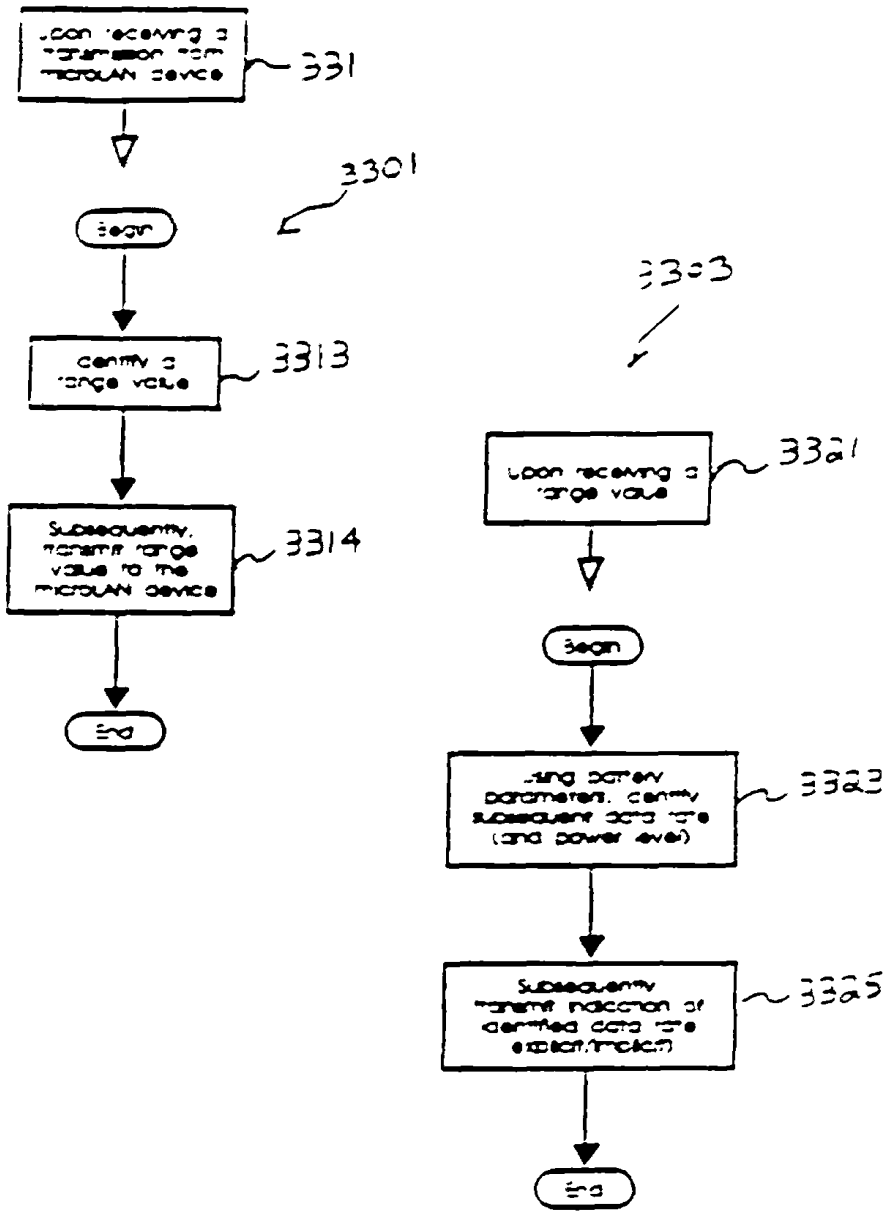
Upon receiving a transmission from MICROLAN device
331
3301
Begin
Identify a range value
3313
Subsequently, transmit range value to the MICROLAN device
3314
End
3303
Upon receiving a range value
3321
Begin
Using barrow parameters, identify subsequent data rate (and power level)
3323
Subsequently transmit indication of identified data rate selection/modem
3325
End

FIG. 35

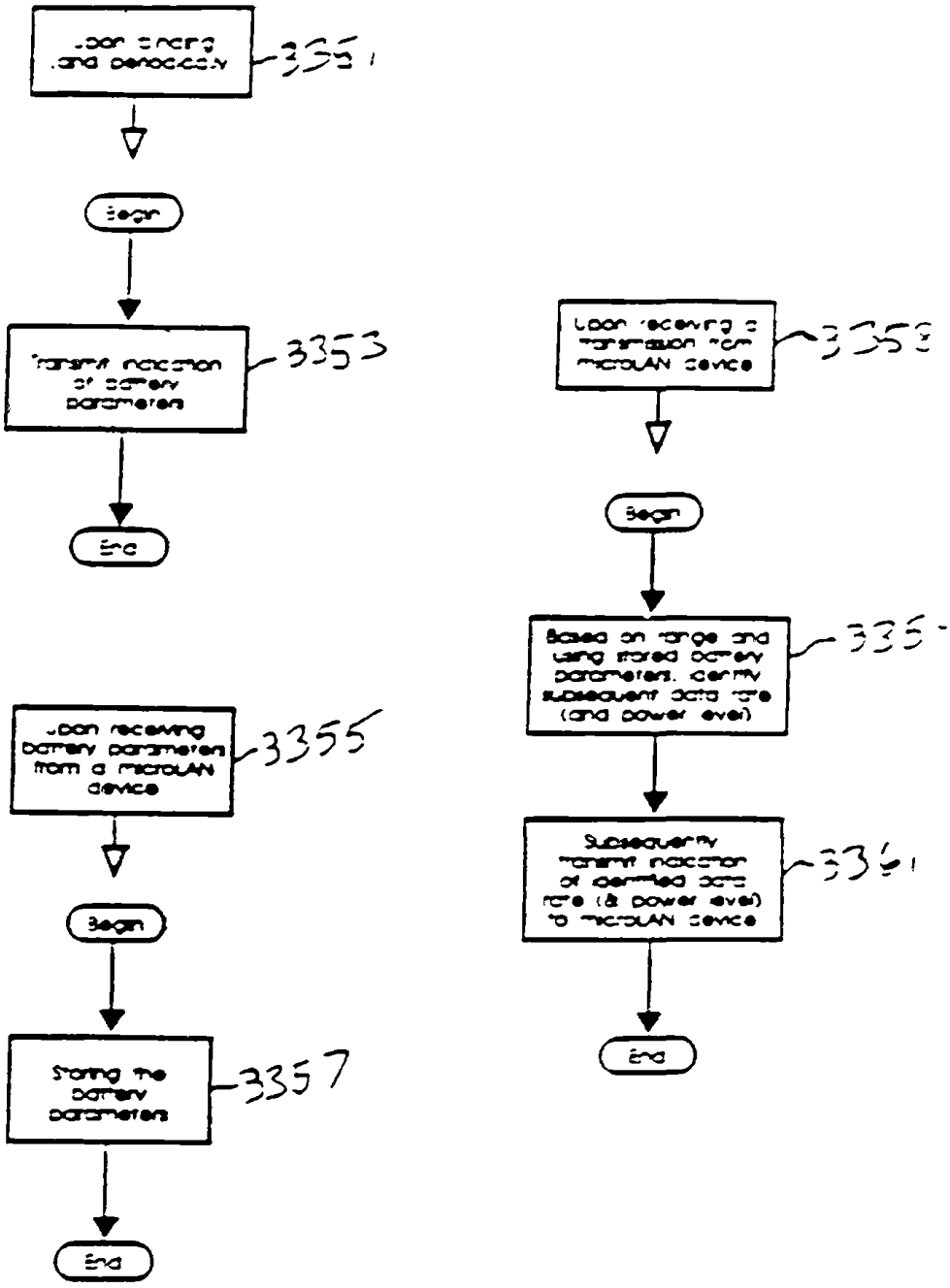
Upon entering and periodically
3351
Begin
Transmit indication of battery parameters
3353
End
Upon receiving battery parameters from a microLAN device
3355
Begin
Storing the battery parameters
3357
End
Upon receiving a transmission from microLAN device
3359
Begin
Based on range and using stored battery parameters, identify subsequent data rate (and power level)
3361
Subsequently transmit indication of identified data rate (& power level) to microLAN device
End

FIG. 36

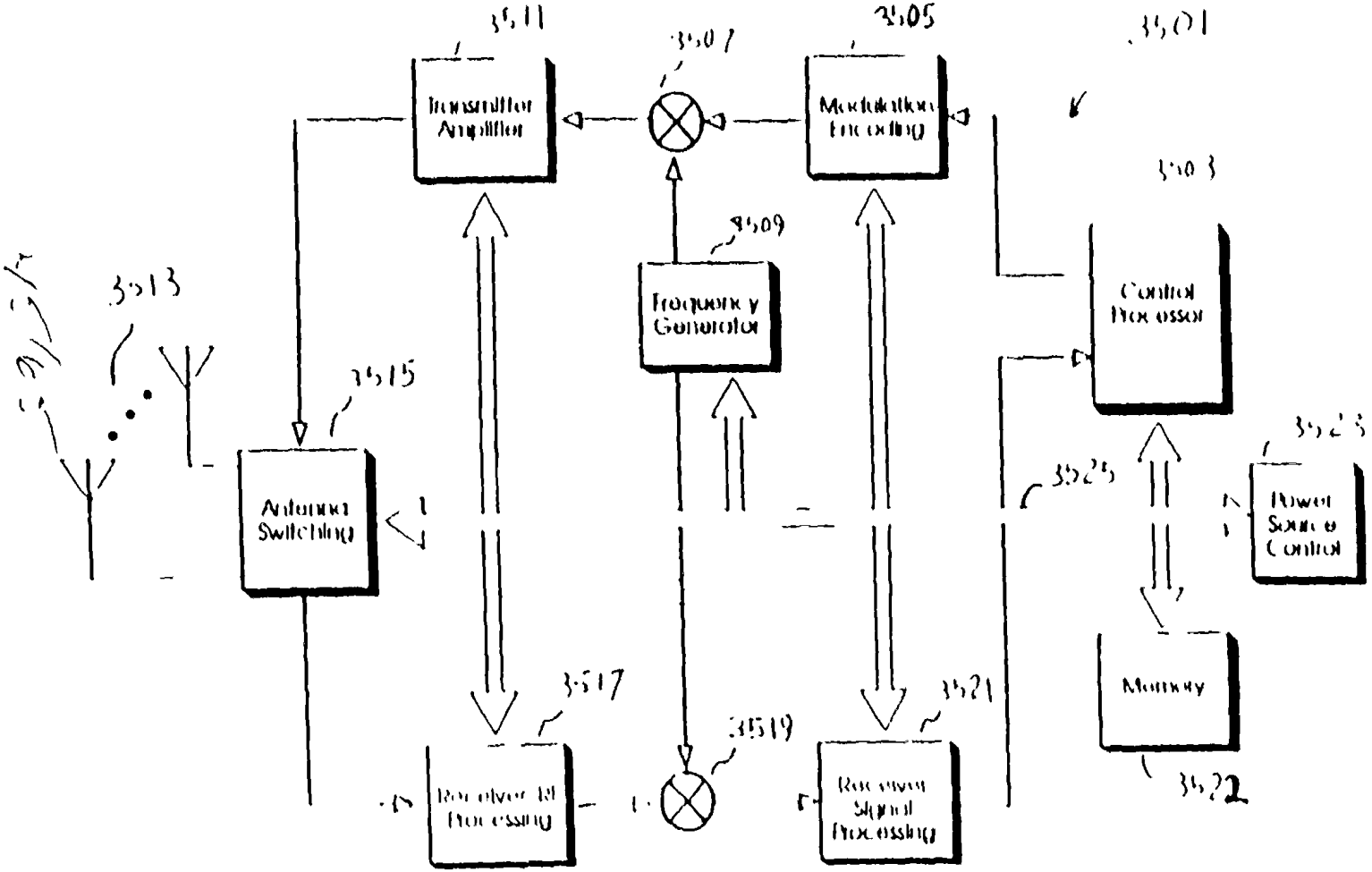
Transmitter Amplifier
Modulation Encoding
Frequency Generator
Control Processor
Antenna Switching
Power Source Control
Memory
Receiver RF Processing
Receiver Signal Processing

Fig. 37

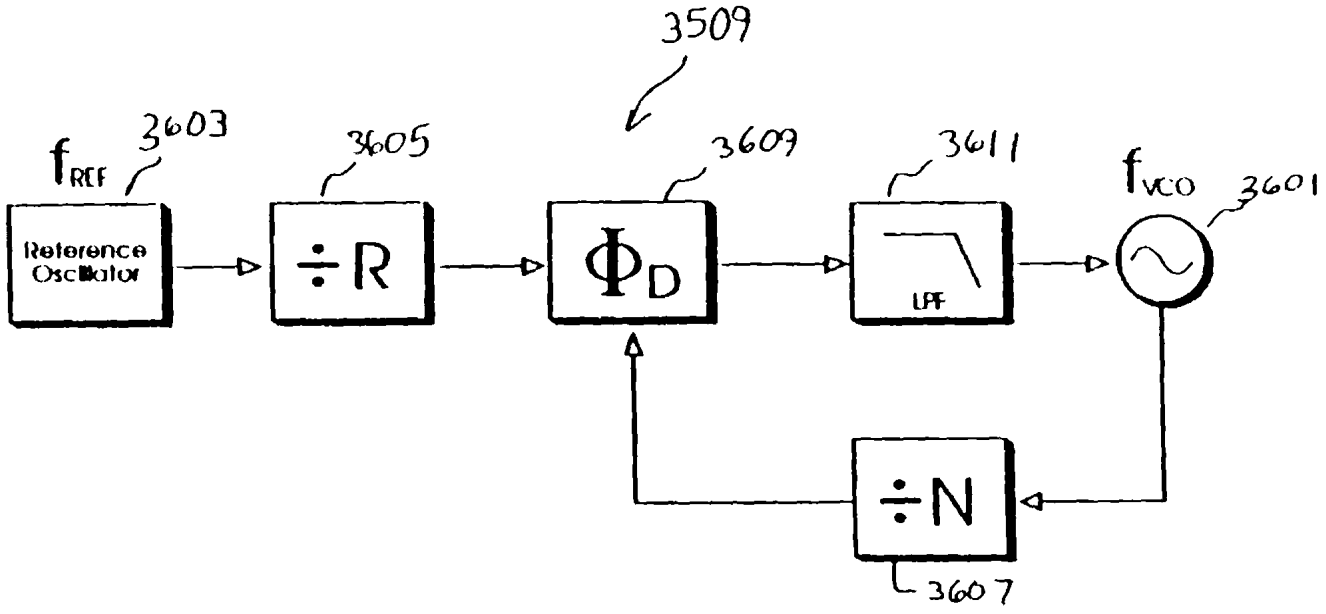
3509
f_{REF}
3603
3605
3609
3611
f_{VCO}
3601
Reference Oscillator
÷R
Φ_D
LPF
÷N
3607

Fig. 38

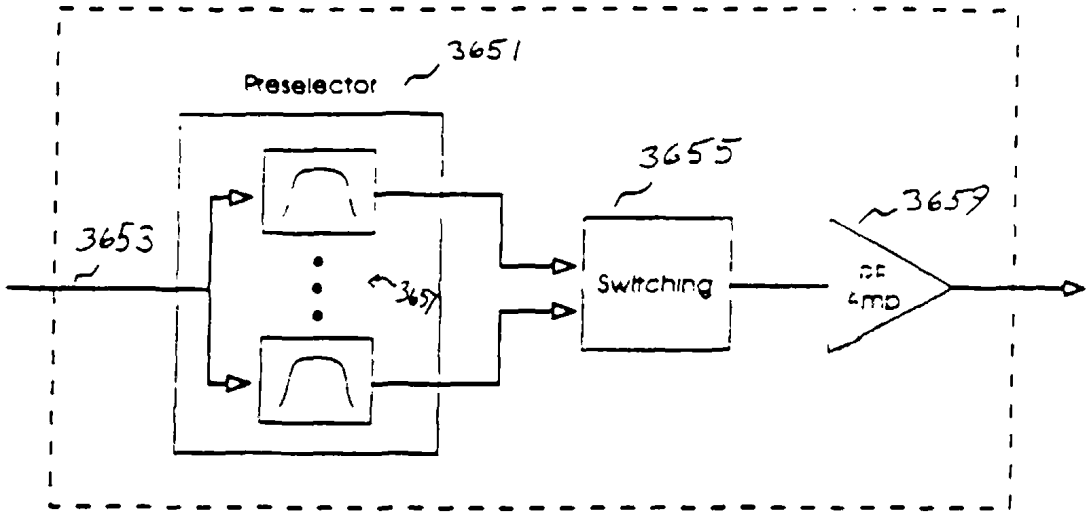

Fig. 39

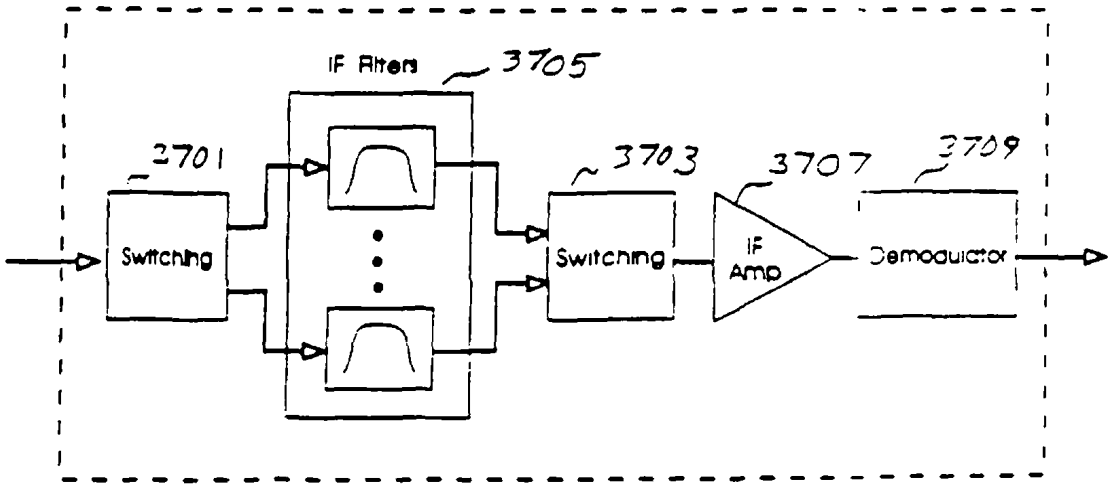

Fig. 40

47/65

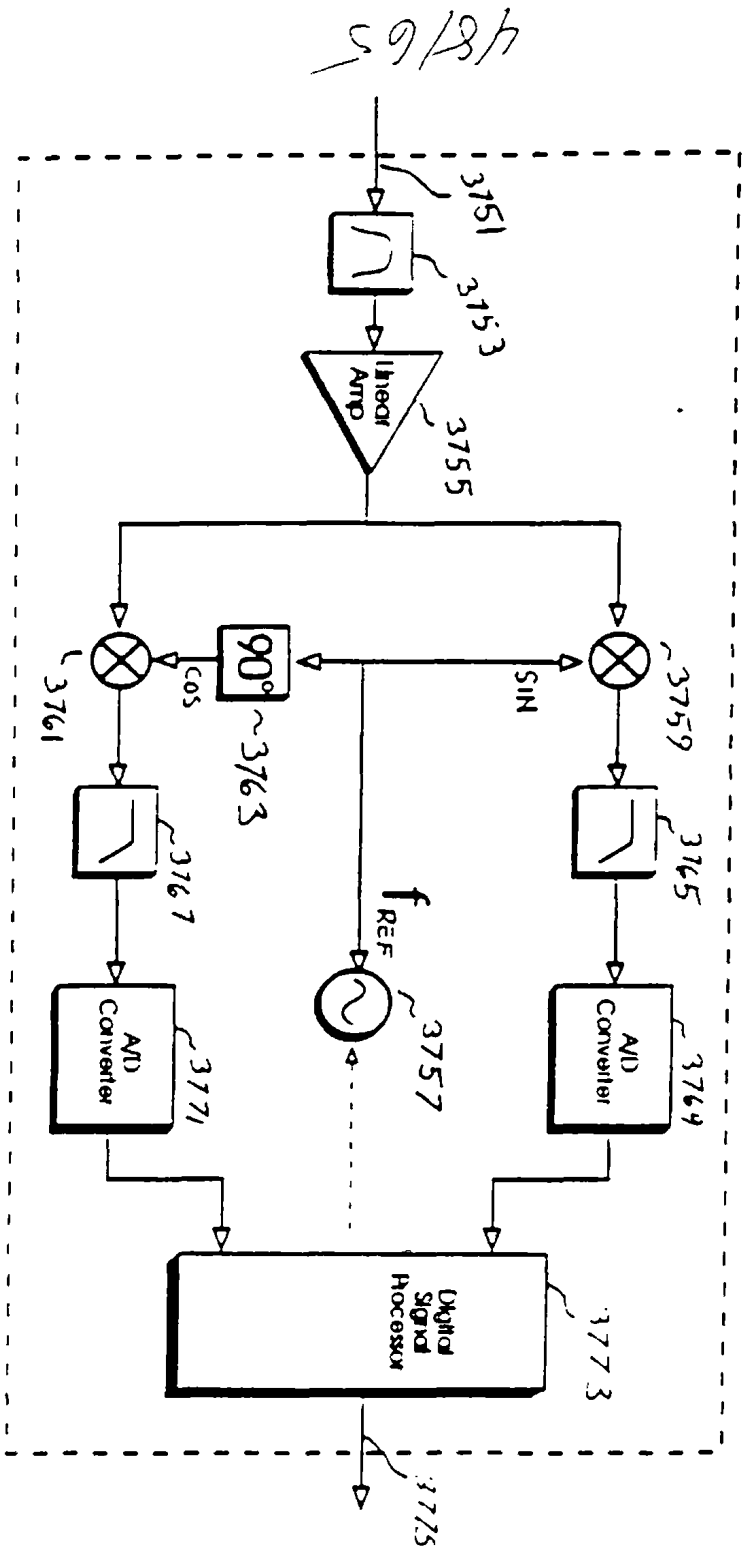
3751
3753
Linear Amp
3755
90°
COS
SIN
3761
3763
3759
3765
3767
f REF
3757
A/D Converter
3771
A/D Converter
3769
Digital Signal Processor
3773
3775

Fig. 41

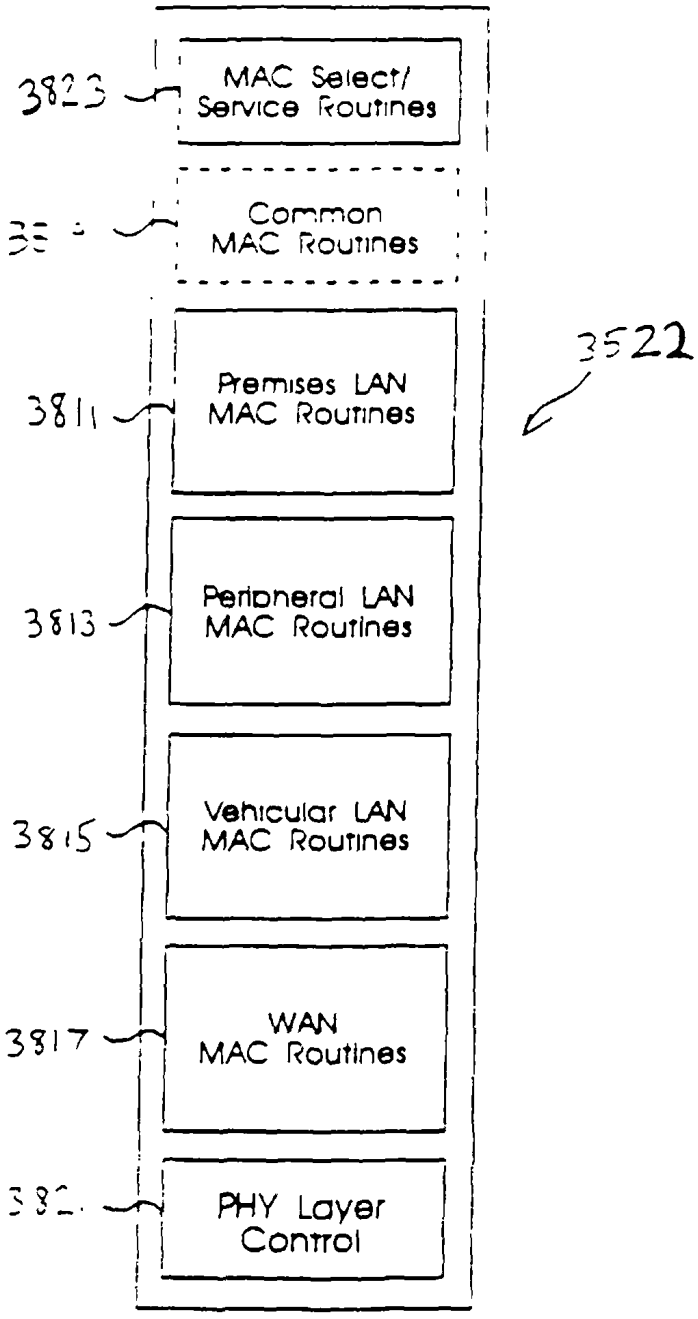
3823
MAC Select/
Service Routines
Common
MAC Routines
3522
3811
Premises LAN
MAC Routines
3813
Peripheral LAN
MAC Routines
3815
Vehicular LAN
MAC Routines
3817
WAN
MAC Routines
PHY Layer
Control

Fig. 42

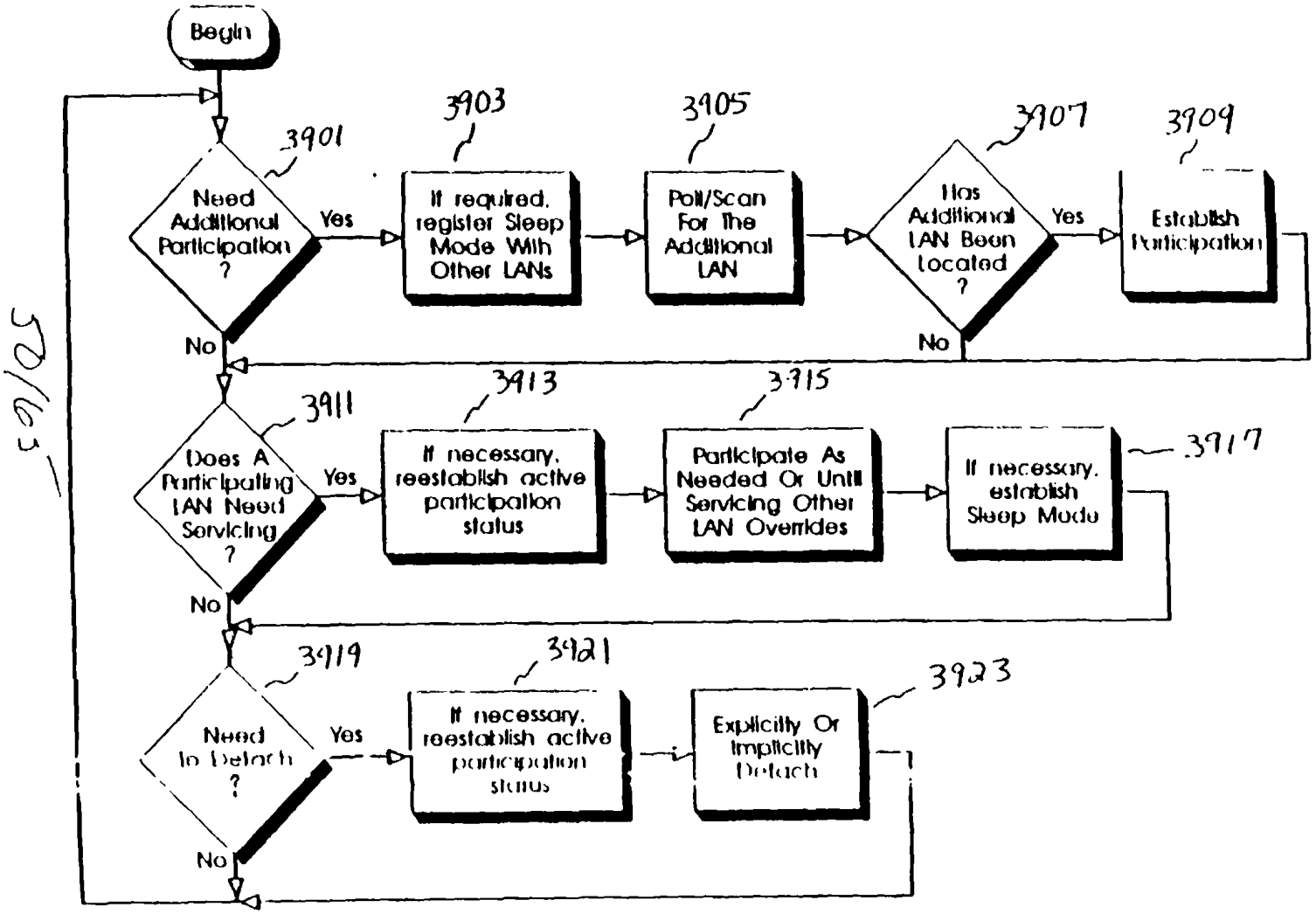
Begin
3901
Need Additional Participation ?
Yes
No
3903
If required, register Sleep Mode With Other LANs
3905
Poll/Scan For The Additional LAN
3907
Has Additional LAN Been Located ?
Yes
No
3909
Establish Participation
3911
Does A Participating LAN Need Servicing ?
Yes
No
3913
If necessary, reestablish active participation status
3915
Participate As Needed Or Until Servicing Other LAN Overrides
3917
If necessary, establish Sleep Mode
3919
Need To Detach ?
Yes
No
3921
If necessary, reestablish active participation status
3923
Explicitly Or Implicitly Detach
3925

Fig. 43

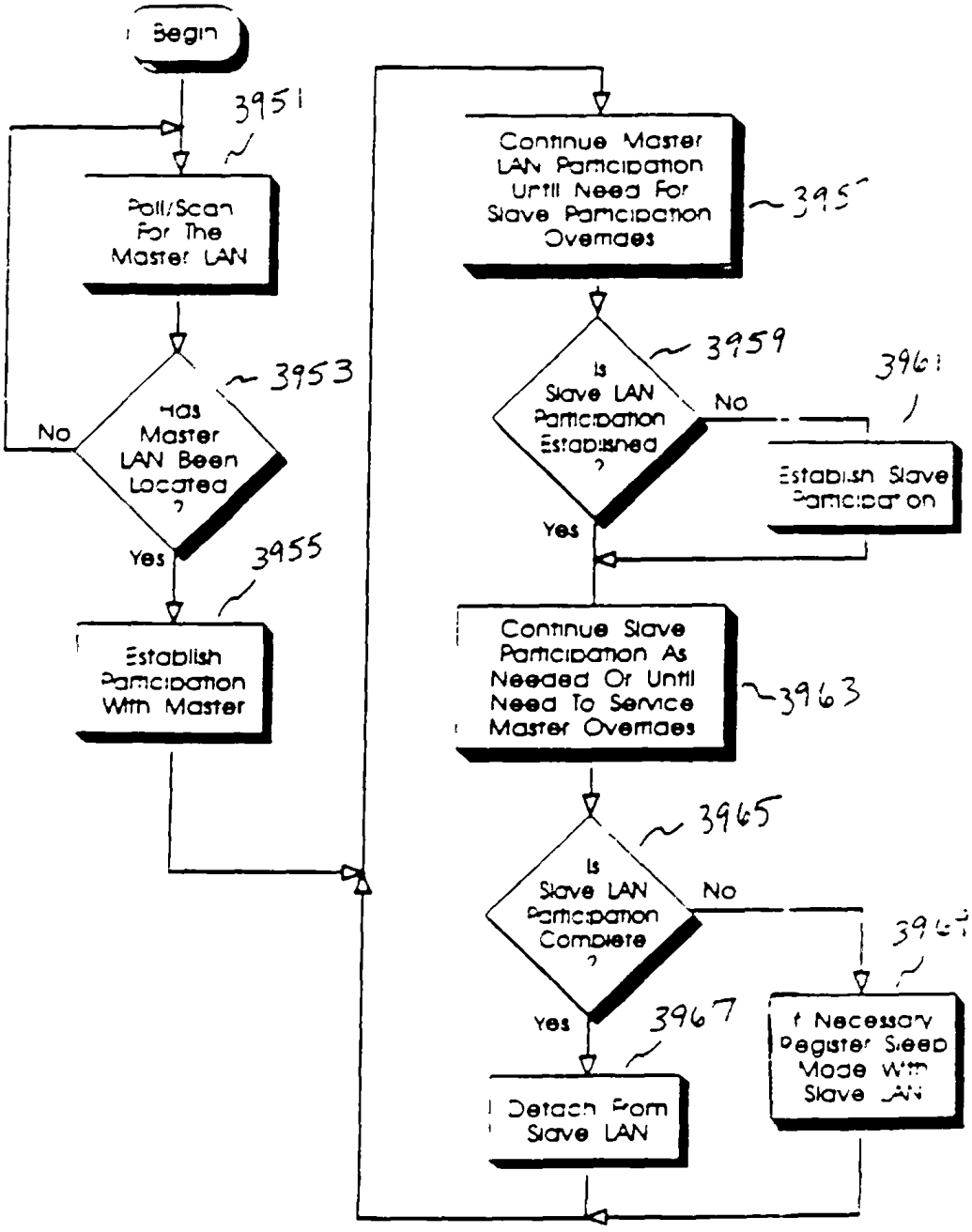
Begin
3951
Poll/Scan For The Master LAN
3953
Has Master LAN Been Located ?
No
Yes
3955
Establish Participation With Master
Continue Master LAN Participation Until Need For Slave Participation Overrides
3957
3959
Is Slave LAN Participation Established ?
No
Yes
3961
Establish Slave Participation
Continue Slave Participation As Needed Or Until Need To Service Master Overrides
3963
3965
Is Slave LAN Participation Complete ?
No
Yes
3967
Detach From Slave LAN
If Necessary Register Sleep Mode With Slave LAN

Fig. 44

57/65

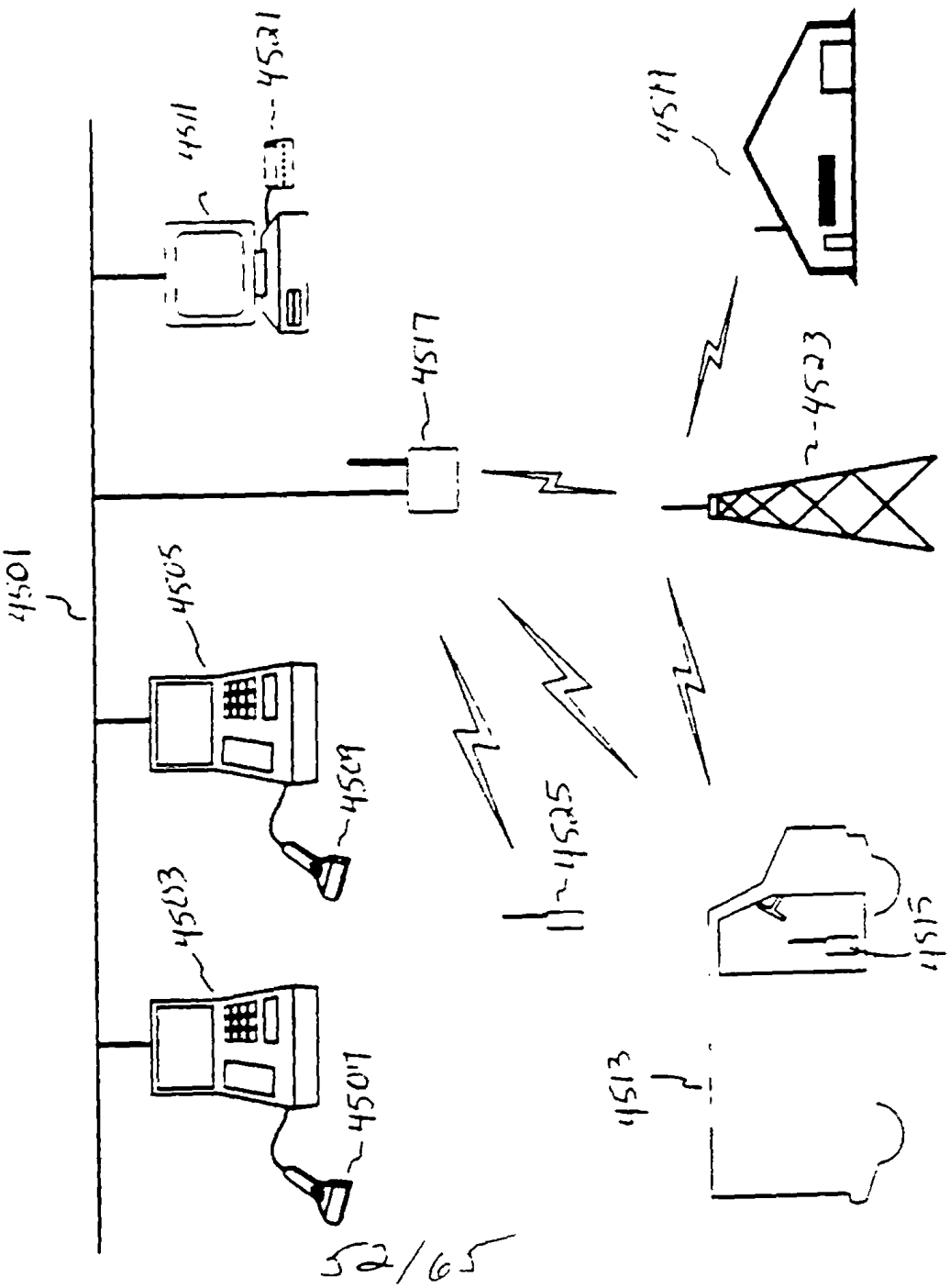
4501
4503
4505
4507
4509
4511
4513
4515
4517
4519
4521
4523
4525

FIG. 45

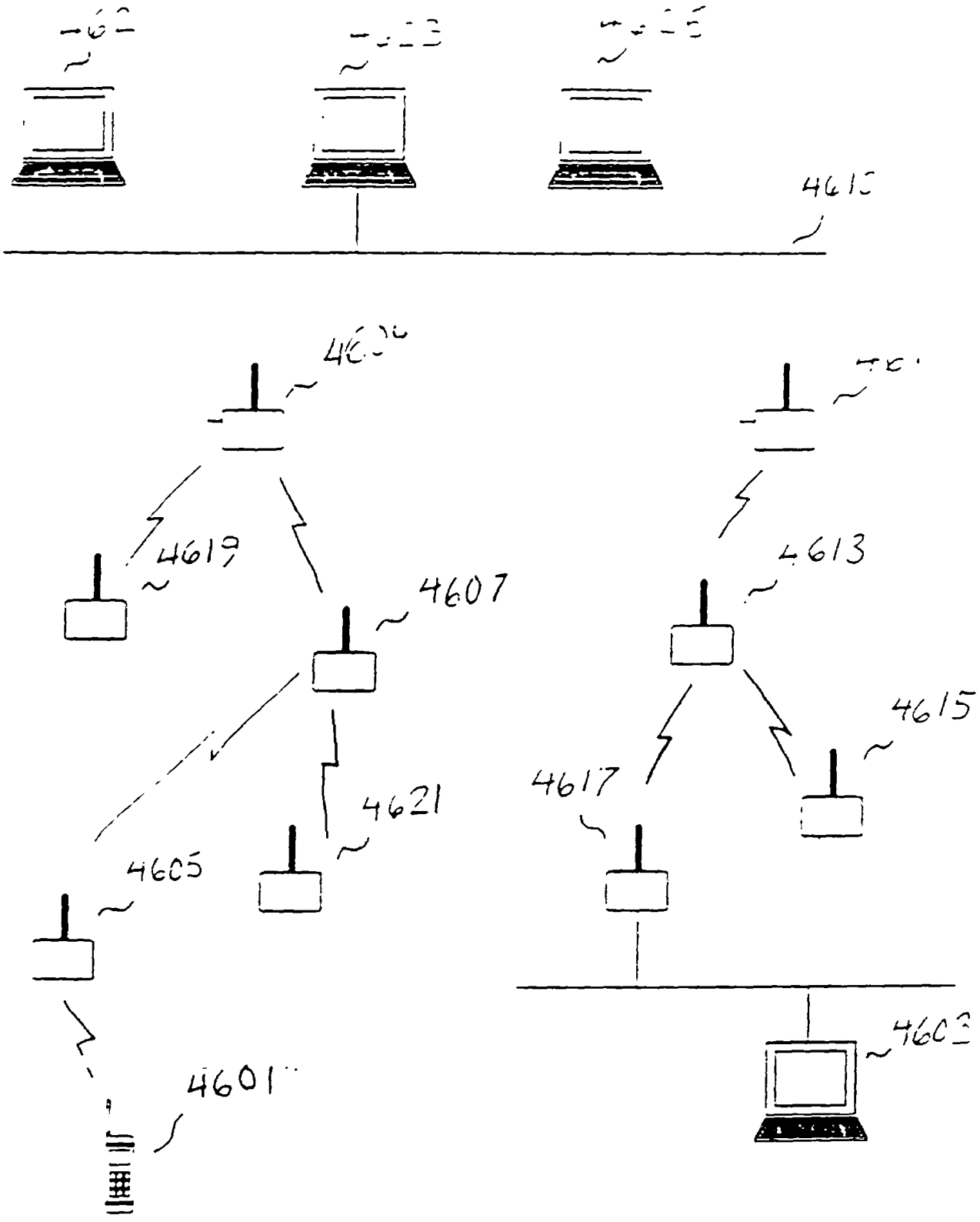

Fig. 46a

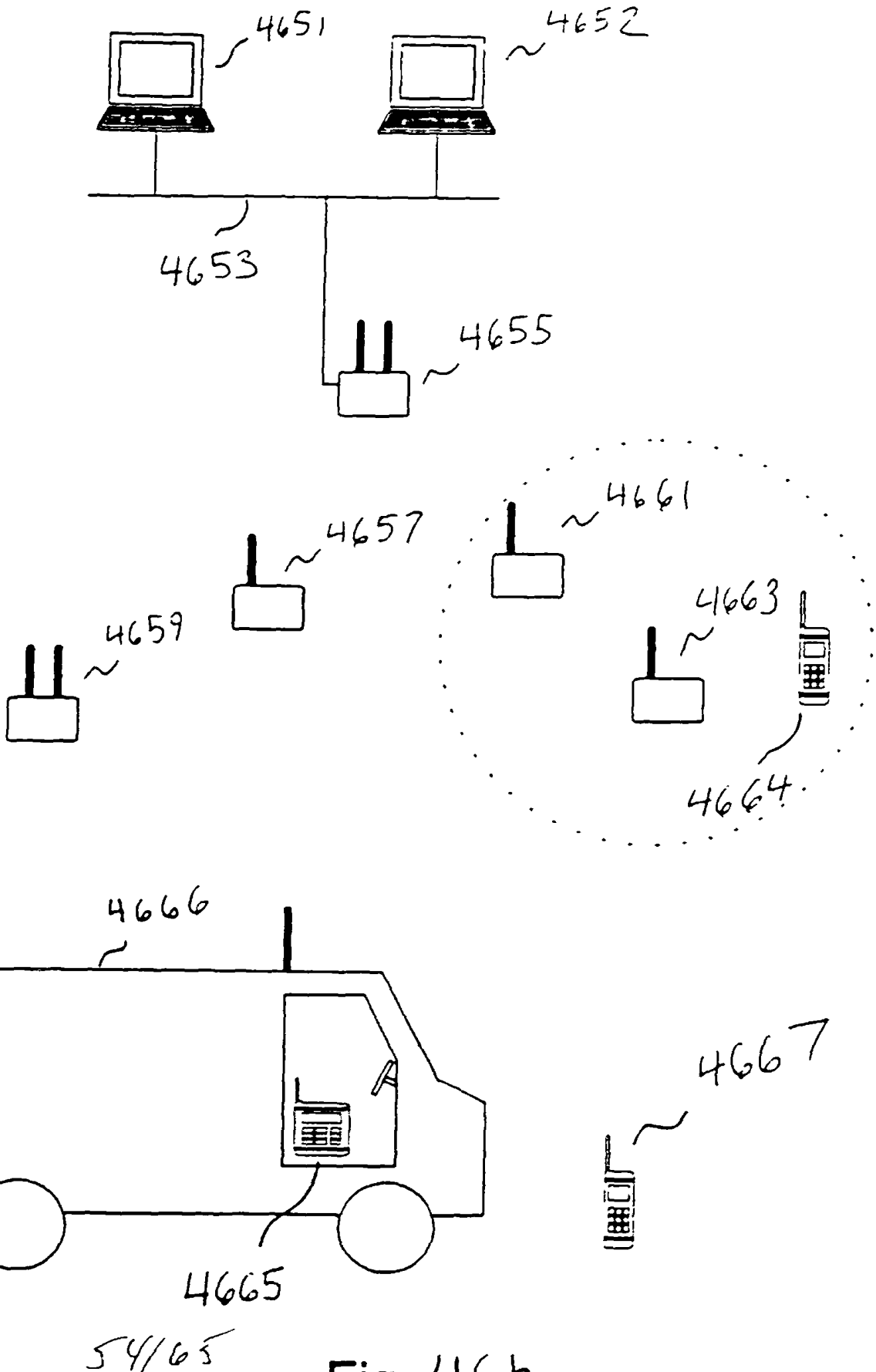

Fig. 46b

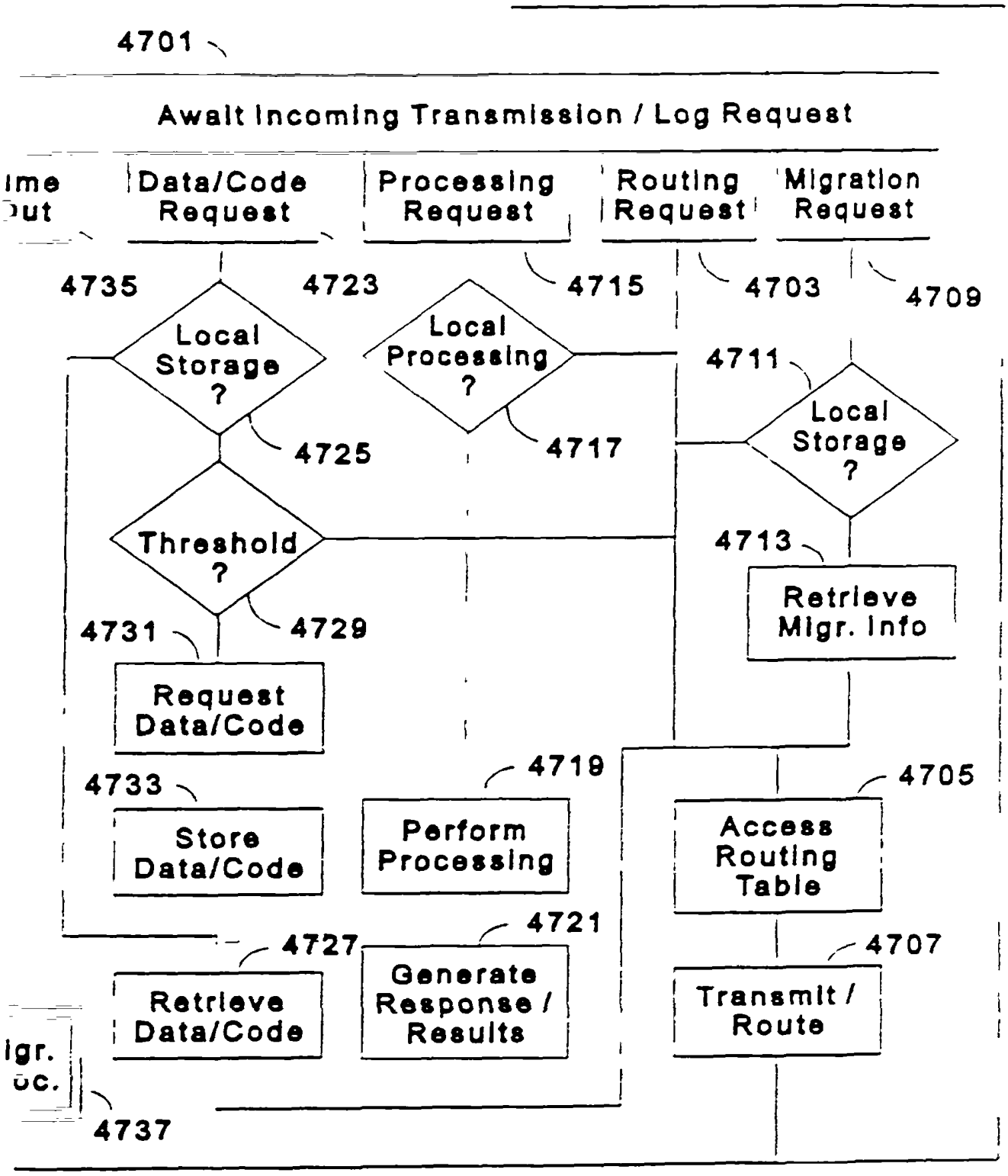

55165

Fig. 47a

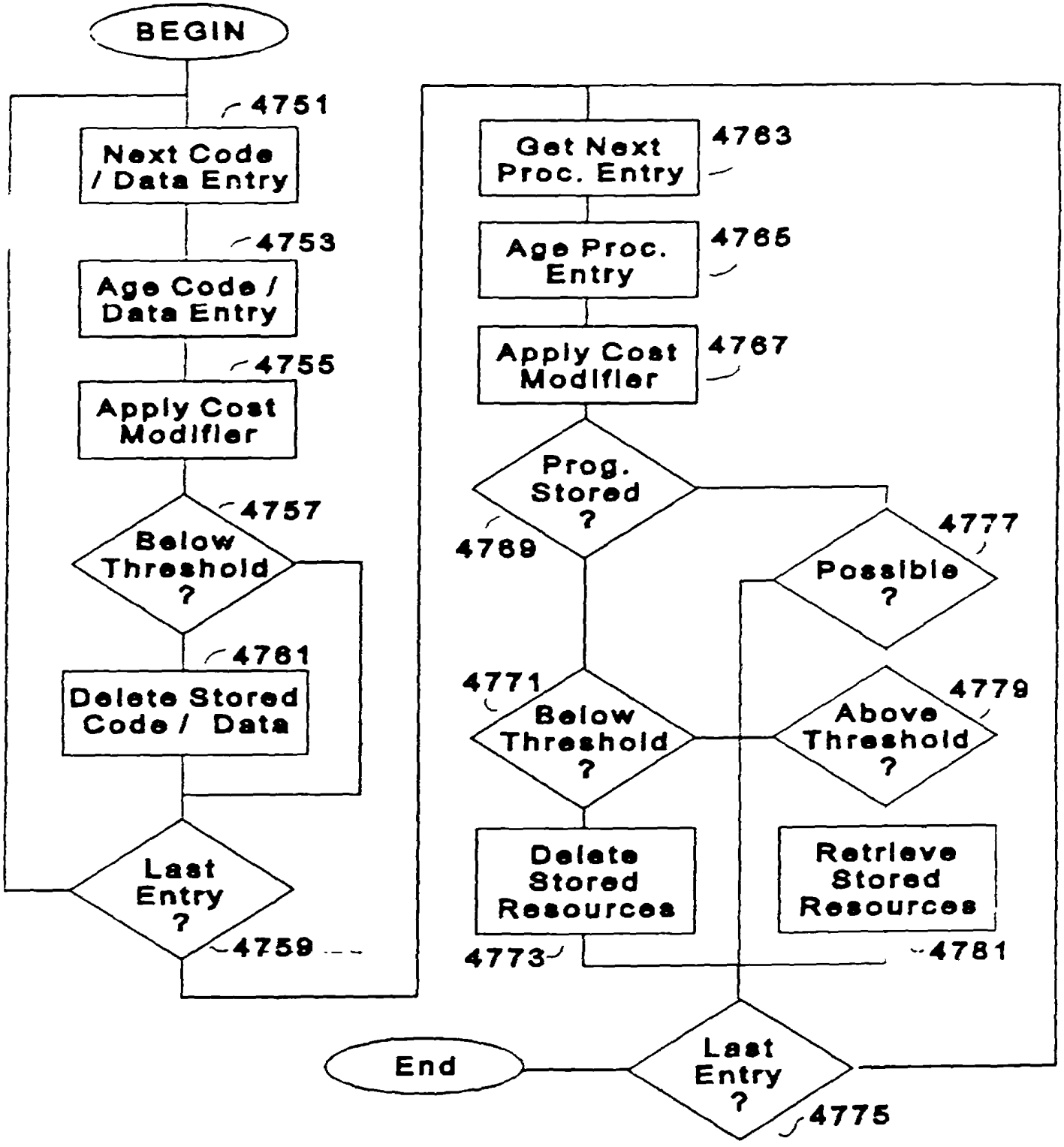
BEGIN
4751
Next Code / Data Entry
4753
Age Code / Data Entry
4755
Apply Cost Modifier
4757
Below Threshold ?
4761
Delete Stored Code / Data
Last Entry ?
4759
Get Next Proc. Entry
4763
Age Proc. Entry
4765
Apply Cost Modifier
4767
Prog. Stored ?
4769
Possible ?
4777
4771
Below Threshold ?
Above Threshold ?
4779
Delete Stored Resources
Retrieve Stored Resources
4773
4781
End
Last Entry ?
4775

Fig. 47b

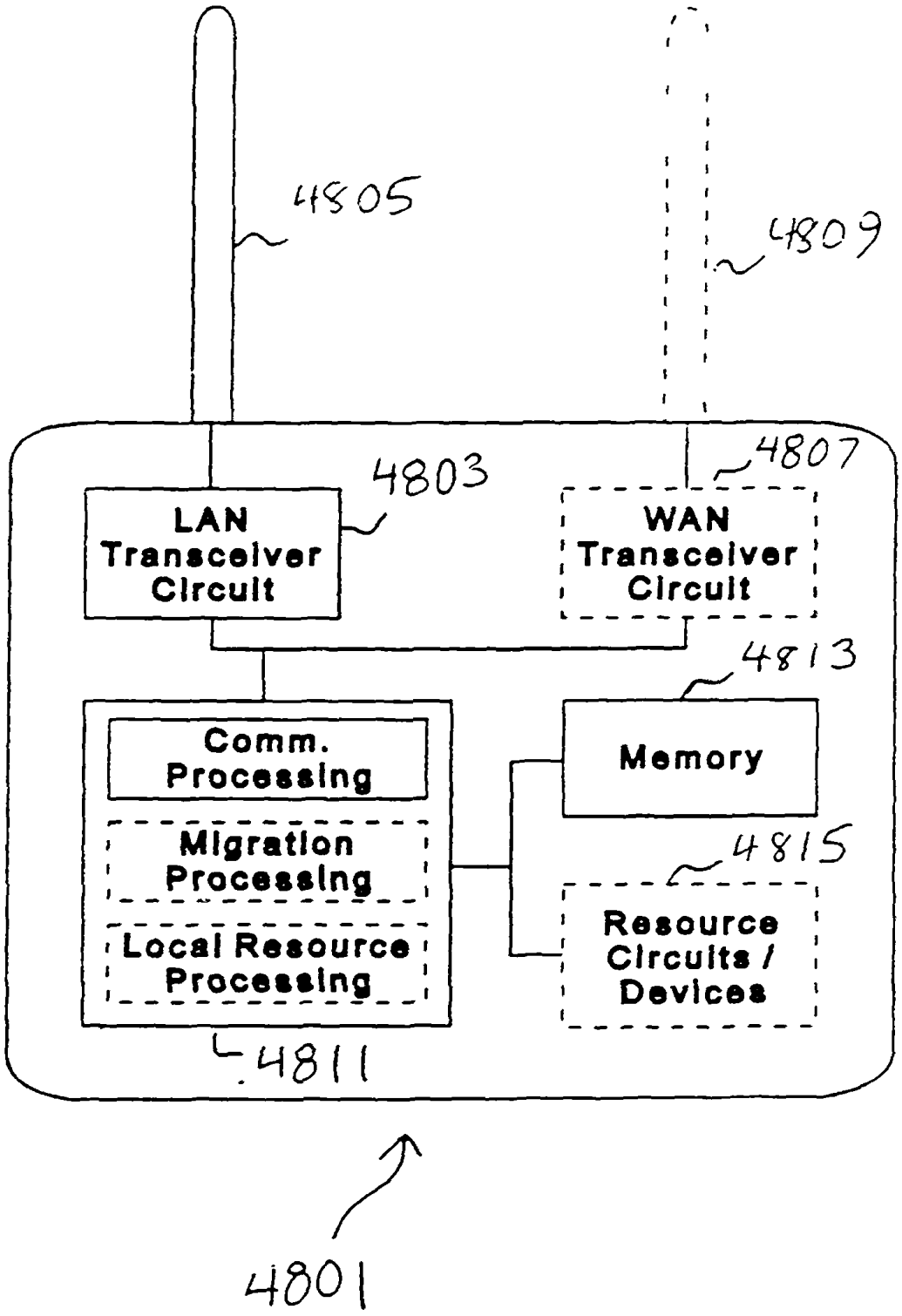
4805
4809
4803
4807
LAN Transceiver Circuit
WAN Transceiver Circuit
4813
Comm. Processing
Migration Processing
Local Resource Processing
Memory
4815
Resource Circuits / Devices
4811
4801

57/65

Fig. 4E

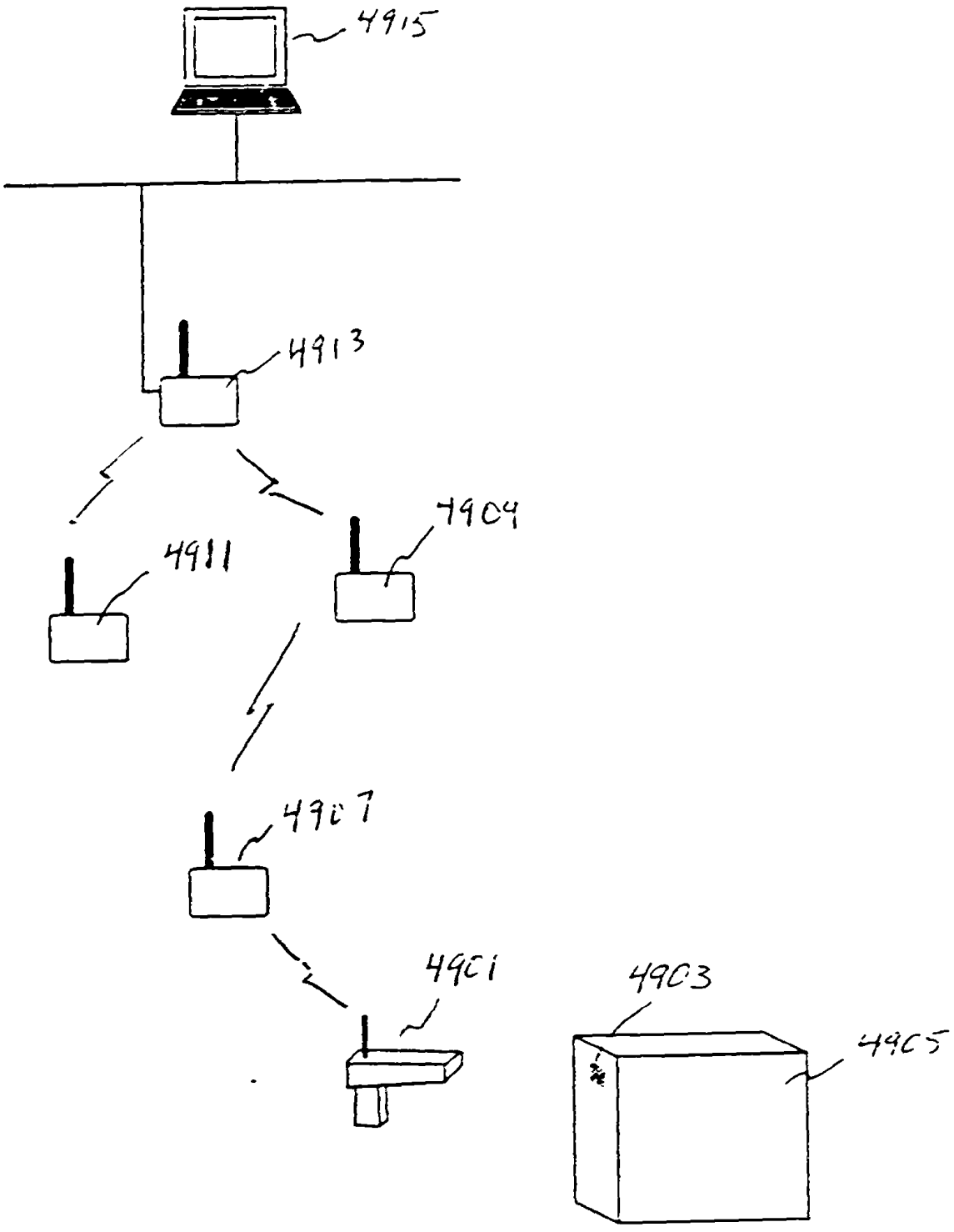

55/65

Fig. 49a

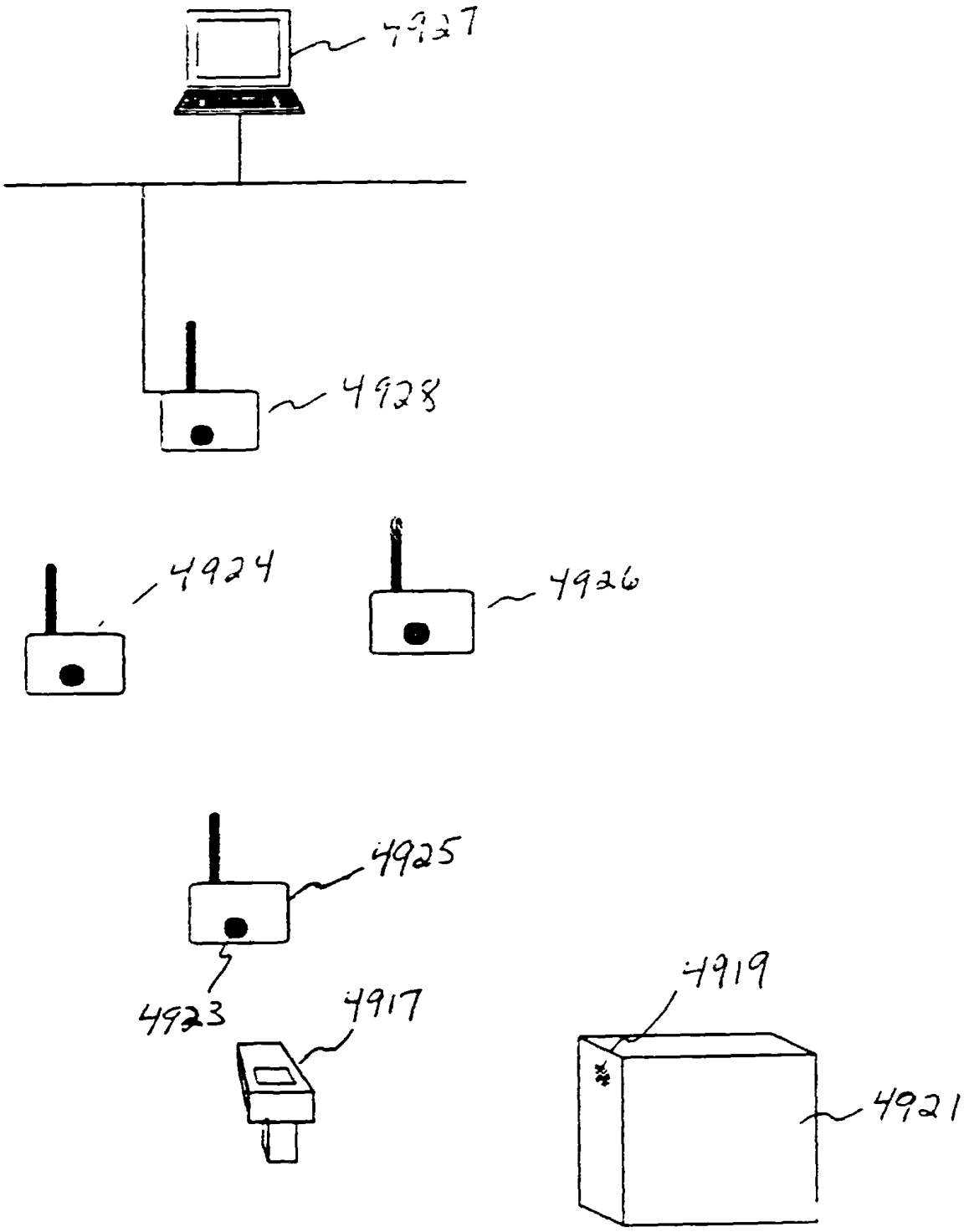

Fig. 49b

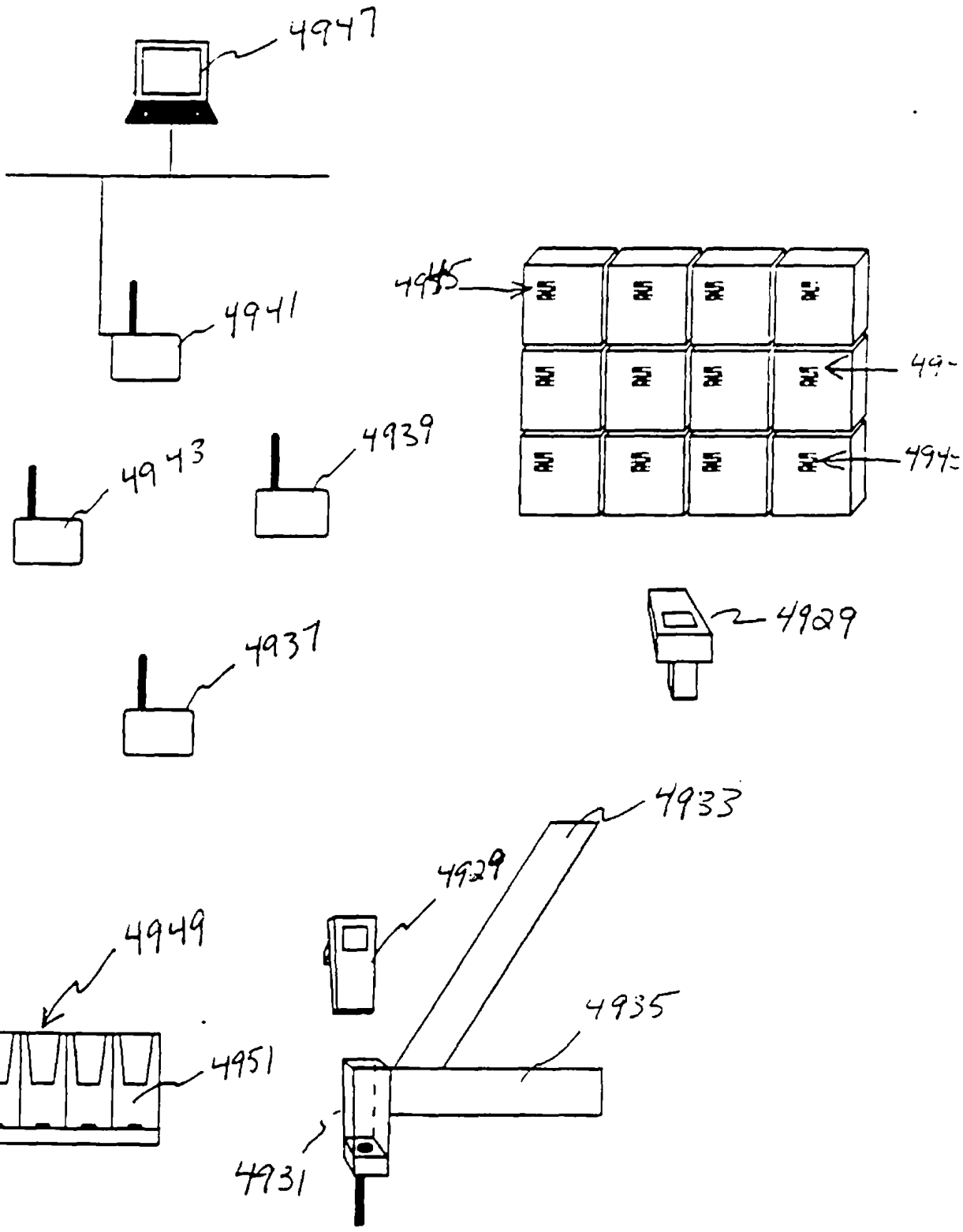

Fig. 49c

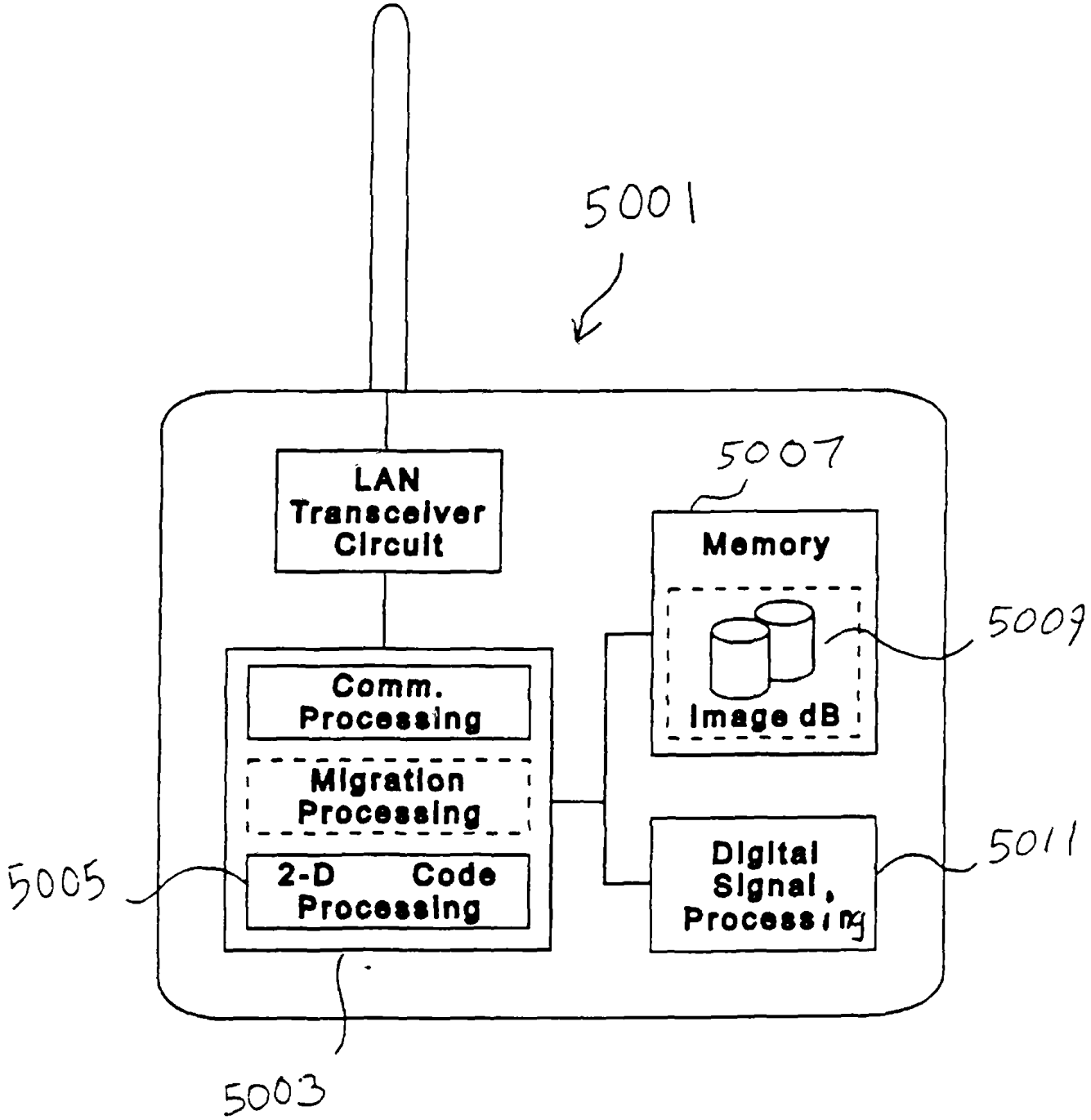
5001
LAN Transceiver Circuit
5007
Memory
Image dB
5009
Comm. Processing
Migration Processing
2-D Code Processing
5005
Digital Signal Processing
5011
5003

Fig. 50

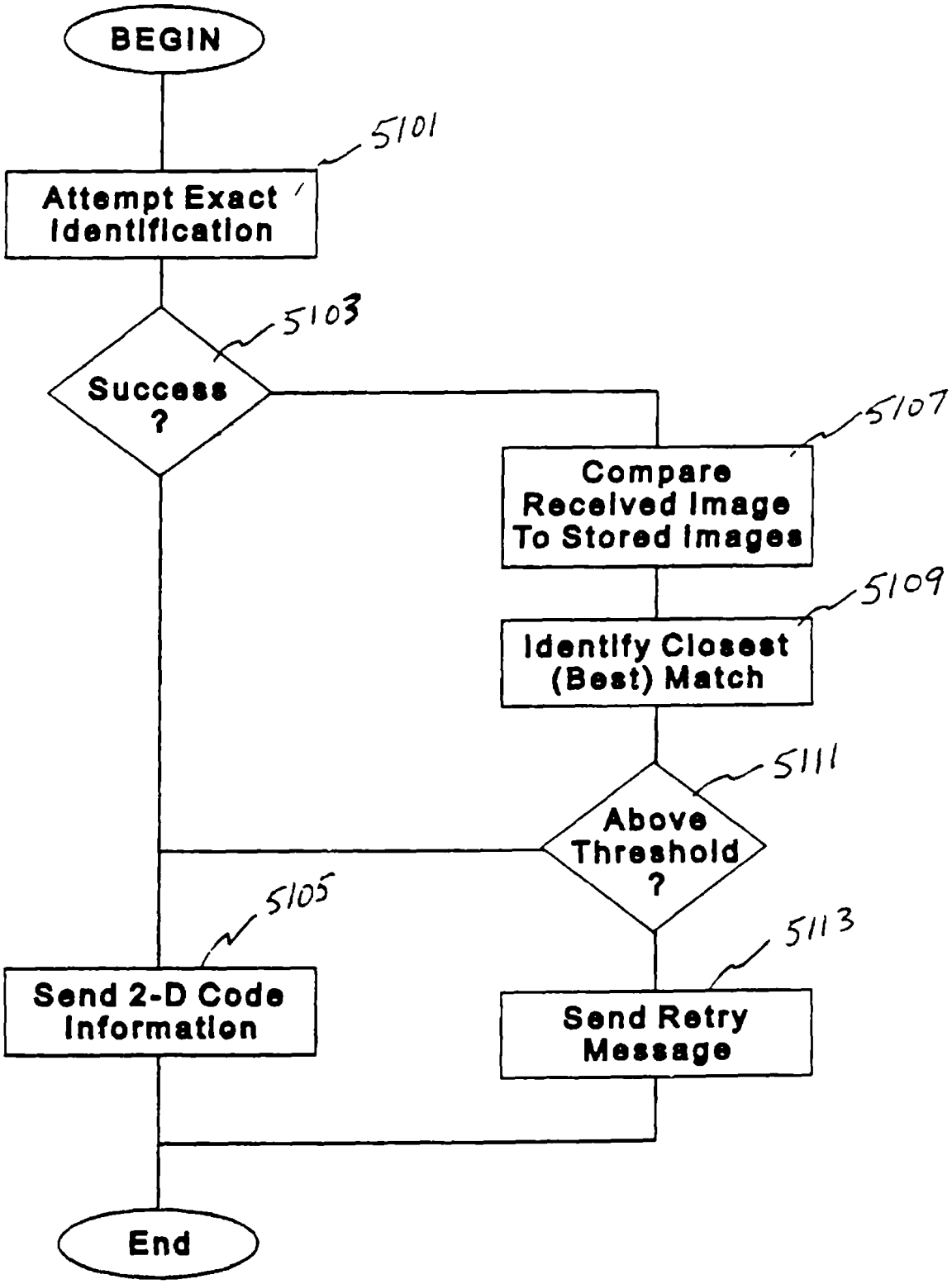
BEGIN
5101
Attempt Exact Identification
5103
Success ?
5107
Compare Received Image To Stored Images
5109
Identify Closest (Best) Match
5111
Above Threshold ?
5105
Send 2-D Code Information
5113
Send Retry Message
End

Fig. 51a

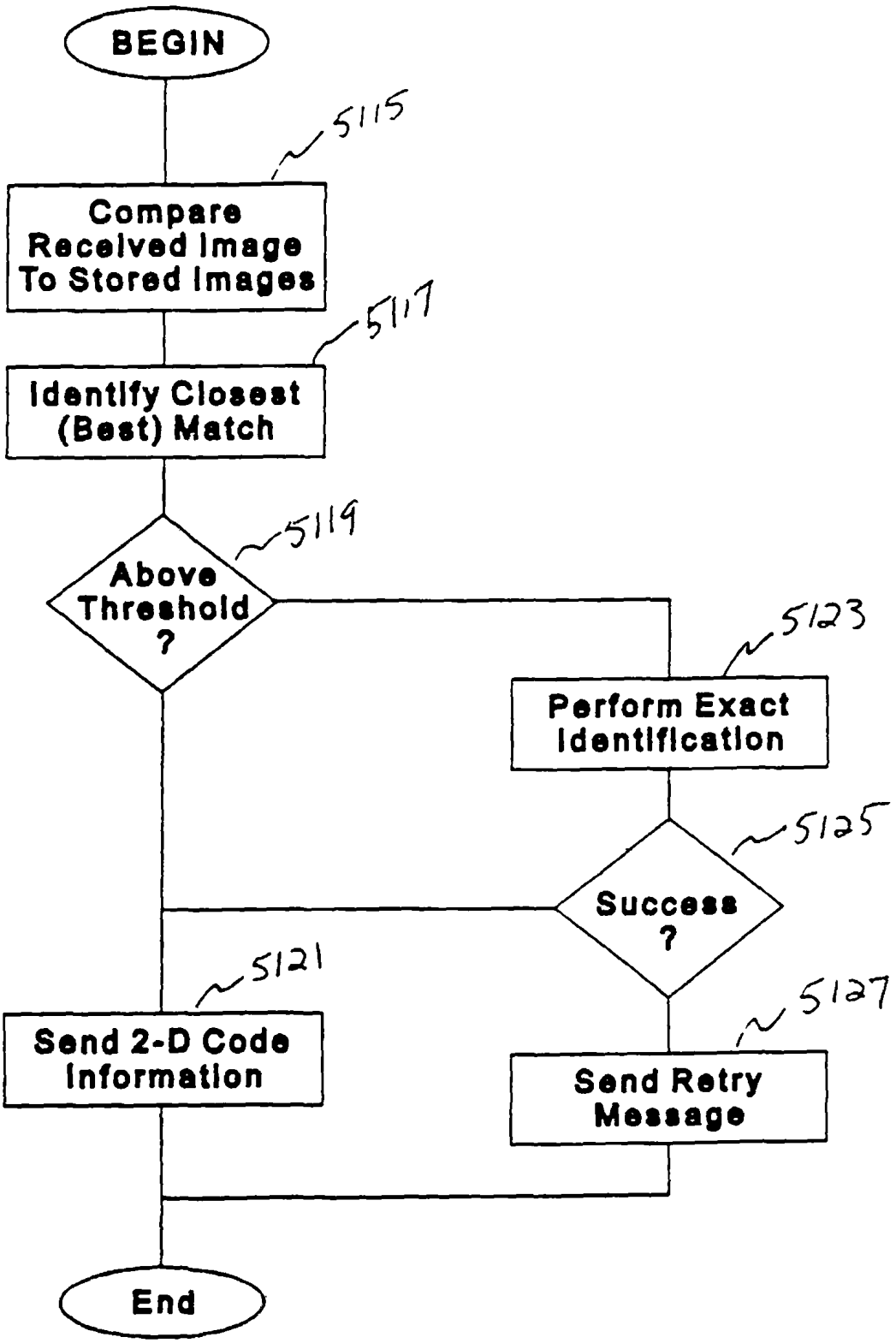
BEGIN
5115
Compare Received Image To Stored Images
5117
Identify Closest (Best) Match
5119
Above Threshold ?
5123
Perform Exact Identification
5125
Success ?
5121
Send 2-D Code Information
5127
Send Retry Message
End

Fig. 51b

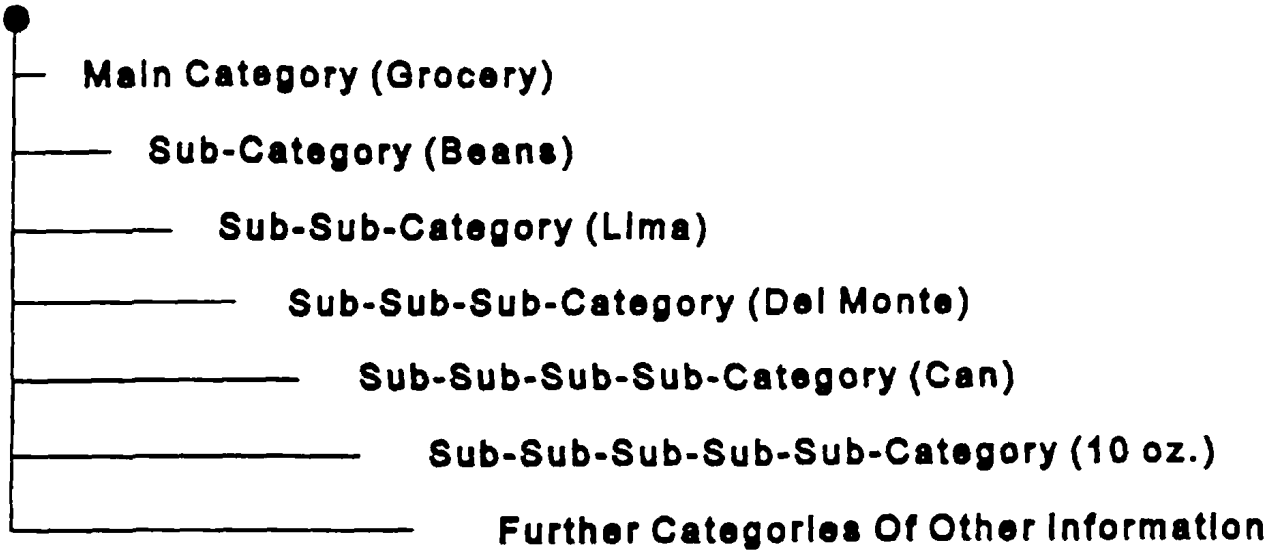

Fig. 52

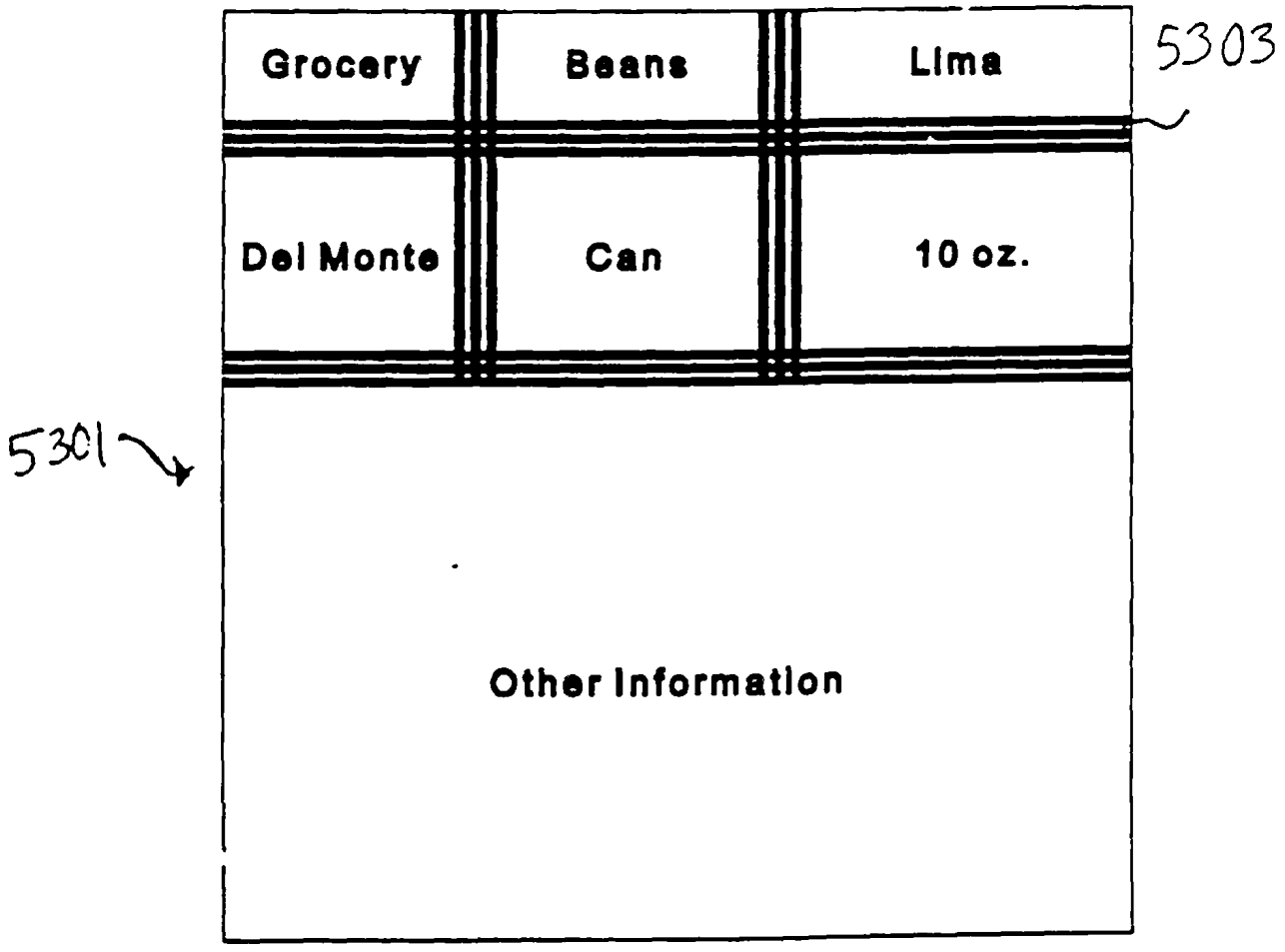

64/65

Fig. 53

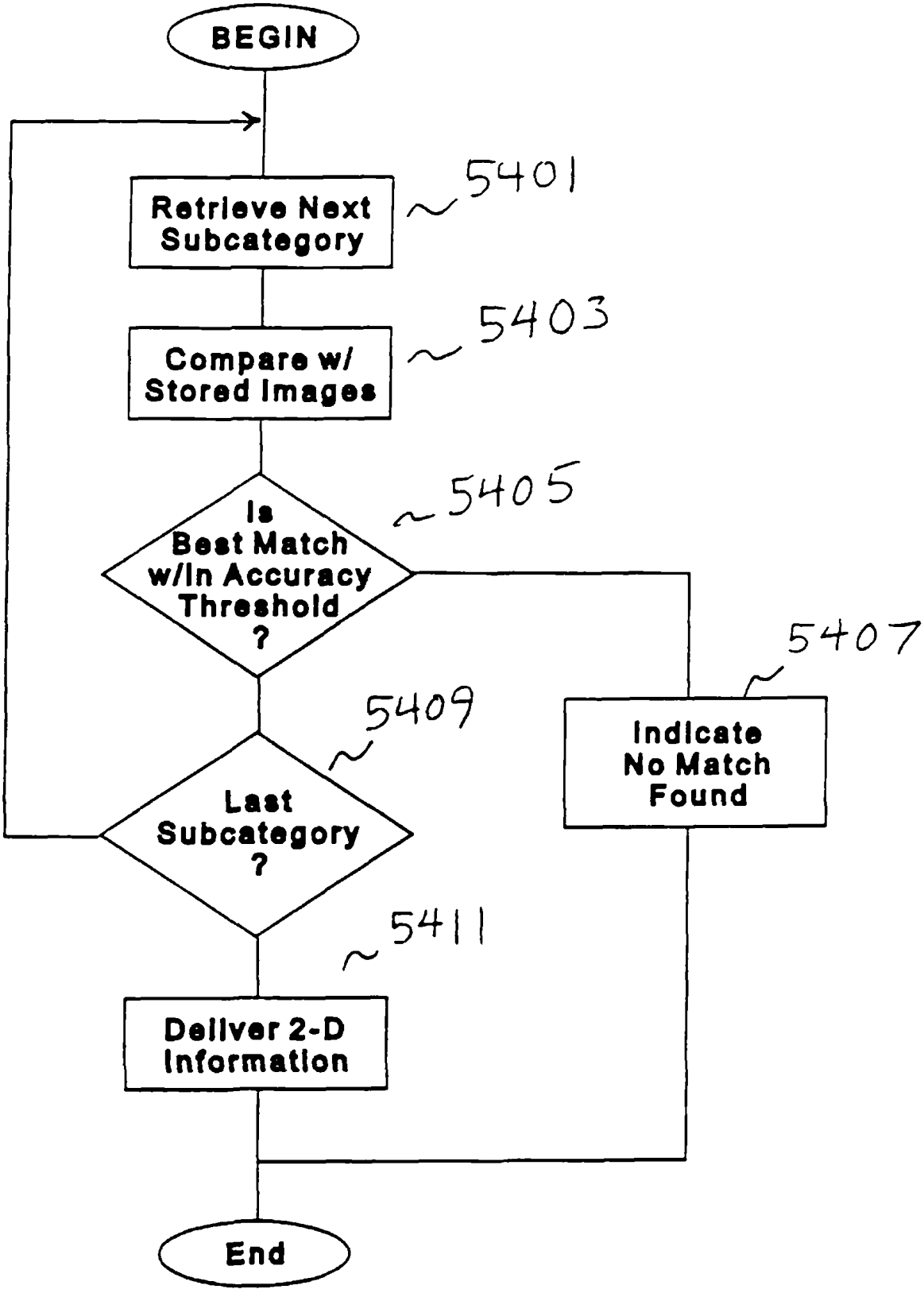
BEGIN
Retrieve Next Subcategory
5401
Compare w/ Stored Images
5403
Is Best Match w/In Accuracy Threshold ?
5405
Indicate No Match Found
5407
Last Subcategory ?
5409
Deliver 2-D Information
5411
End

Fig. 54