April 7, 1931. D. S. McCHESNEY ET AL 1,799,617

METHOD FOR MAKING BOOKS

Filed May 15, 1929

FIG. 5

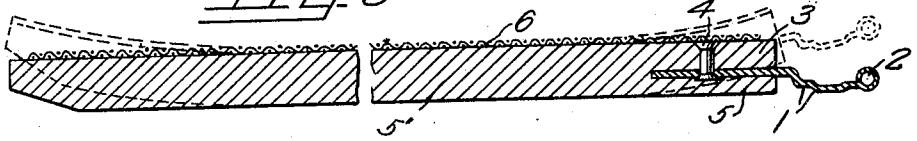

FIG. 1

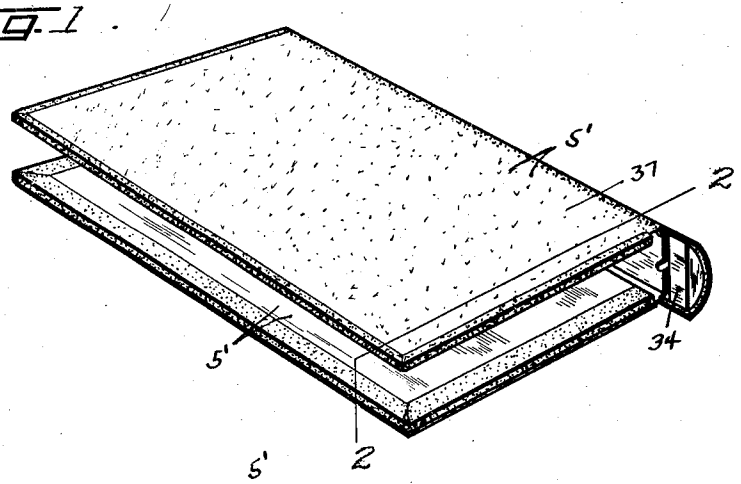

FIG. 2

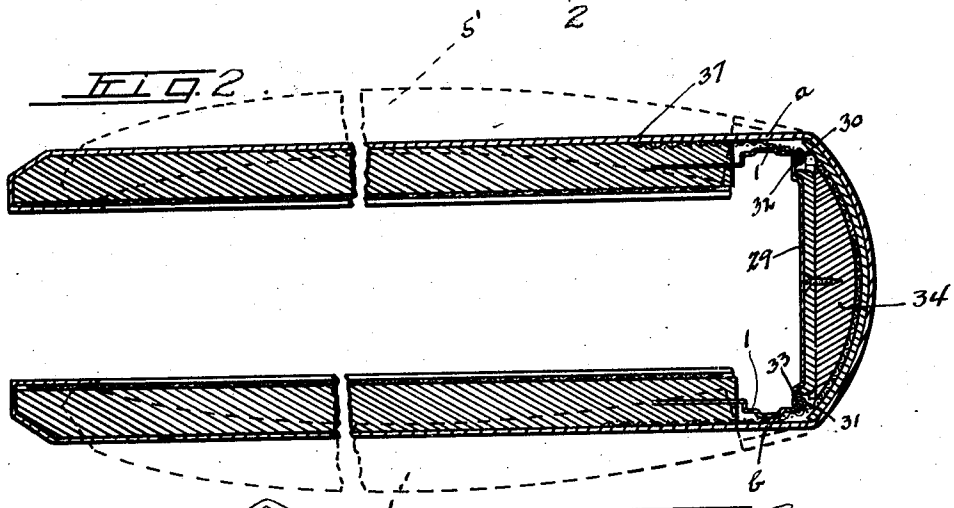

FIG. 4

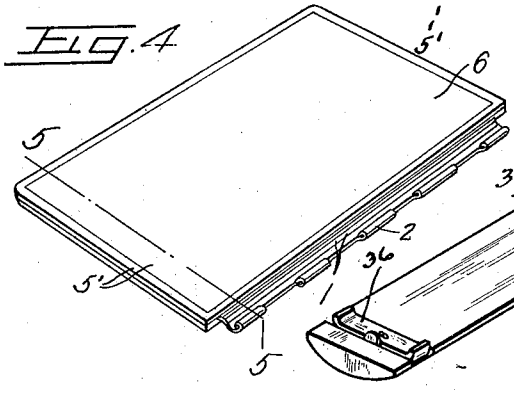

FIG. 3

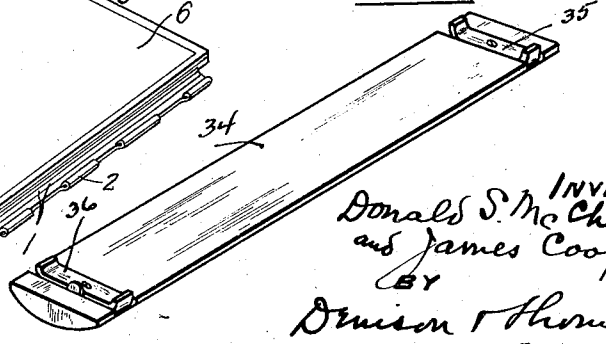

INVENTORS
Donald S. McChesney
and James Cooper
BY
Dennison & Thompson
ATTORNEYS

Patented Apr. 7, 1931 1,799,617

UNITED STATES PATENT OFFICE

DONALD S. McCHESNEY AND JAMES COOPER, OF SYRACUSE, NEW YORK, ASSIGNORS TO HALL & McCHESNEY, INC., OF SYRACUSE, NEW YORK, A CORPORATION OF NEW YORK

METHOD FOR MAKING BOOKS

Application filed May 15, 1929. Serial No. 363,280.

This invention relates to a new and improved method for making books.

The usual way in which books are manufactured, particularly books of the ledger and record type, is to form the covers of the book from a cardboard like material which is usually called bookbinder's board. These covers are then assembled with the back for the book on which they are usually hingedly mounted. After they are so assembled, the covers of the book and the back are covered with a material appropriate for the use to which the book is to be put.

This material is sometimes entirely leather, sometimes leather and cloth, and sometimes entirely cloth or canvas. The covering material is usually applied to the bookbinder's board by the use of a liquid paste or other adhesive.

This application of liquid adhesive necessarily moistens the covering material so that it is thereafter necessary to subject the book to a drying means.

It has been found that in the drying process, unless means is taken to prevent such a result, the leather or other covering of the book will tend to shrink in drying with the result that the bookbinder's board will be warped out of shape, inasmuch as its tensile strength is not sufficient to resist, unassisted, the contraction of the covering material in order to prevent the distortion of the bookbinder's board.

During the drying process, it has been the custom of those manufacturing books of this type to compress the same in heavy presses during the drying operation so as to prevent any distortion of the bookbinder's board. This method of drying requires that the book be kept in the press for a period of approximately 24 hours because of the fact that the book, being held firmly in the press will dry very slowly, much more slowly than would be the case if the whole book were exposed to the atmosphere.

The main object of our invention is to provide a method for making and driying books of the type described, which will permit the drying of the book in a comparatively short length of time without obtaining any distortion of the bookbinder's board at the end of the drying operations.

Another object is to disclose a method of drying books which will permit such drying without the use of a press or other restricting means for the bookbinder's board during the drying process.

Other objects and advantages will appear from the following description taken in connection with the accompanying drawings in which:—

Figure 1 is a perspective view of an assembled book.

Figure 2 is a section on line 2—2 of Figure 1.

Figure 3 is a perspective view of the form used to retain the back of the book in position during the drying operation.

Figure 4 is a perspective view of one of the covers of a book.

Figure 5 is a section on line 5—5 of Figure 4.

In carrying out our method of book manufacture, the individual covers for the book are first made in the usual way which consists of building up a cover to the desired thickness by adhesively fastening together two or more pieces of bookbinder's board.

Before such boards are fastened together, as perhaps may best be seen from Figures 4 and 5, a hinge member —1— carrying longitudinally extending eyes —2— is secured to one edge of a piece of bookbinder's board —3— by means of rivets —4—. A second piece of bookbinder's board —5— is then secured to board —3— so that the hinge member —1— is positioned between the boards —3— and —5—.

When a cover has been assembled in the manner just described, we cover the side of the cover which will be the inside of the cover when it is finally assembled in a book, with a coating of liquid paste or other adhesive. We then moisten with water, a piece of unshrunken textile material and for this purpose we have found unshrunken muslin to be satisfactory. The textile material —6— is then stretched and placed upon the side of the cover which carries the liquid adhesive. The

cover is then in condition to be subjected to a preliminary drying operation.

It will be understood that different types of drying apparatus may be employed provided only that the heat therein may be controlled within limits which will give the best results for this particular operation.

When a completed cover —5'— has been covered with liquid adhesive and the textile material —6— placed thereon in the manner heretofore described, such cover in its damp condition, is preferably subjected to heat above normal temperature.

When the cover —5'— and the textile material —6— carried thereon has been dried it will be found that the unshrunken textile material —6— having been moistened and then dried, will have shrunk and this shrinking of the the textile material —6— will have caused the cover —5'— to have been distorted into a concavo-convex shape with the concave side carrying the textile material.

In Figure 5, we have shown in heavy lines, the cover —5'— carrying the textile material —6— before the same has been subjected to the drying operation, and we have shown in dotted lines on such figure the shape of the cover —5'— after the same has been dried in the manner just described.

After a supply of covers —5'— have been dried, two of the covers are assembled on to a back plate —29— having on its opposite longitudinal edges, eyes —30— and —31— which co-act with hinge members —1— and pintles —32— and —33— to form piano hinges.

The covers —5'— are assembled on the back plate —29— with their concave faces on the inside. In Figure 2, we have shown in dotted line a pair of covers —5'— assembled on the back plate —29—. A back form —34— is then removably positioned on the rear face of back plate —29—by means of clips —35— and —36—.

With the members of the book assembled in the manner just described, the outside surfaces of the covers —5'— are covered with liquid paste or adhesive and the final outside covering material, for example, leather —37— is placed on one cover —5'—, around the back form —34— and on the other opposite cover —5'—.

The covering —37— extends inwardly on to the inner surfaces of covers —5'— only a comparatively short distance, a distance just sufficient that the edges of the book which are exposed to view will be covered by such covering.

With the book assembled and covered in the manner just described, it is in condition to be subjected to a second and final drying operation.

Due to the fact that the covering —37— whether made of leather or of other covering material will shrink to a certain extent during the drying operation, the bookbinder's board comprising the covers —5'— will be distorted in a direction opposite to the direction in which they were distorted when they were dried in the first drying operation with the unshrunken textile material —6— thereon.

We have found that if our method of making books is followed that the distortion of the covers —5'— in the second drying operation will be equal to the distortion which took place during the first drying operation, so that when the second drying operation has been completed, the covers —5'— will be flat and of the proper shape for the completed book.

We have discovered that the second drying operation will be performed with the greatest success if means is provided for supplying the circulating heated air with a small amount of moisture because of the fact that the presence of a small amount of moisture in the air will cause a more uniform drying of the bookbinder's board.

When the second drying operation has been completed, the book may be equipped in the usual manner to make it a complete book of the character desired.

It will be understood that our method may be followed by the use of various types of dryers.

It will also be understood that various types and weights of unshrunken textile material may be used on the covers during the first drying operation depending upon the thickness of the cover itself and also depending upon the type of material with which the outside of the covers of the book is to be covered.

It will also be understood that, depending upon the type of book which is being manufactured, a considerable variation is permitted in the temperature to which the covers are subjected during the drying operation, and it will also be understood that the length of time the cover will be subjected to heat and the length of time the assembled book is subjected to heat may also be varied to a considerable extent depending upon the type of book being manufactured, for although we have shown and described the different steps of our method of manufacturing books with a considerable degree of particularity, yet we do not desire to restrict ourselves to the temperatures to which the covers are subjected or to the duration of the drying process or the particular material used, as various changes and modifications may be made without departing from the spirit of the appended claims.

We claim:

1. In the method of manufacturing a book cover, the steps of securing a fabric to the inner surface of a bookbinder's board and shrinking the fabric to bow the board, then

securing a covering material to the exterior surface of the board and shrinking the covering material to return the board to plane form.

2. In the method of making a book, the steps consisting of securing fabric to one of the sides of a pair of book covers, shrinking the fabric, assembling the covers to a back member, securing a covering material to the other sides of the covers and shrinking such covering material.

3. In the method of making a book cover, the steps consisting of securing fabric to one side of a bookbinder's board, shrinking the fabric to bow the board, then securing a covering material to the other side of the bookbinder's board and shrinking the covering material to return the board to plane form.

4. In the method of manufacturing books, the steps consisting of forming a plurality of pieces of bookbinder's board to the desired shape for a book cover, applying a liquid adhesive to one side thereof, securing on such adhesive an unshrunken fabric, drying the bookbinder's board with the fabric thereon, assembling two of such dried bookbinder's boards to a back plate with the fabric-covered surfaces on the inside, securing a covering material to the outer surfaces of the bookbinder's boards by means of a liquid adhesive, and then drying such outside covering.

5. In the method of making a book, the steps consisting of securing fabric to one of the sides of a pair of book covers, subjecting such fabric to heat to shrink the fabric, assembling the covers to a back member, securing a covering material to the other sides of the covers and then subjecting the covering material to heat to shrink such covering material.

6. In the method of manufacturing book covers, the steps of securing a fabric to one side of a bookbinder's board, shrinking the fabric to bow the board, securing a shrinkable sheet of material to the opposite side of the board and shrinking such material to return the board to substantially flat form.

7. In the method of manufacturing book covers, the steps of securing a fabric to one side of a bookbinder's board, subjecting the fabric to heat above normal temperature to shrink the same and bow the board, securing a shrinkable sheet of material to the opposite side of the board, subjecting such shrinkable material to heat above normal temperature to shrink the same and return the board to substantially flat form.

8. In the method of manufacturing book covers, the steps of securing a sheet of shrinkable material to one side of a bookbinder's board, shrinking such material to bow the board, securing a sheet of shrinkable material to the opposite side of the board and shrinking such material to return the board to substantially flat form.

9. In the method of manufacturing book covers, the steps of securing a sheet of shrinkable material to one side of a bookbinder's board, subjecting the material to heat above normal temperature to shrink the same and bow the board, securing a sheet of shrinkable material to the opposite side of the board, subjecting such shrinkable material to heat above normal temperature to shrink the same and return the board to substantially flat form.

In witness whereof they have hereunto set their hands this 1st day of May, 1929.

DONALD S. McCHESNEY.
JAMES COOPER.