Sept. 16, 1958 E. F. STEFFEN 2,852,302

PICKUP DEVICE

Filed June 17, 1957

Fig. 1.

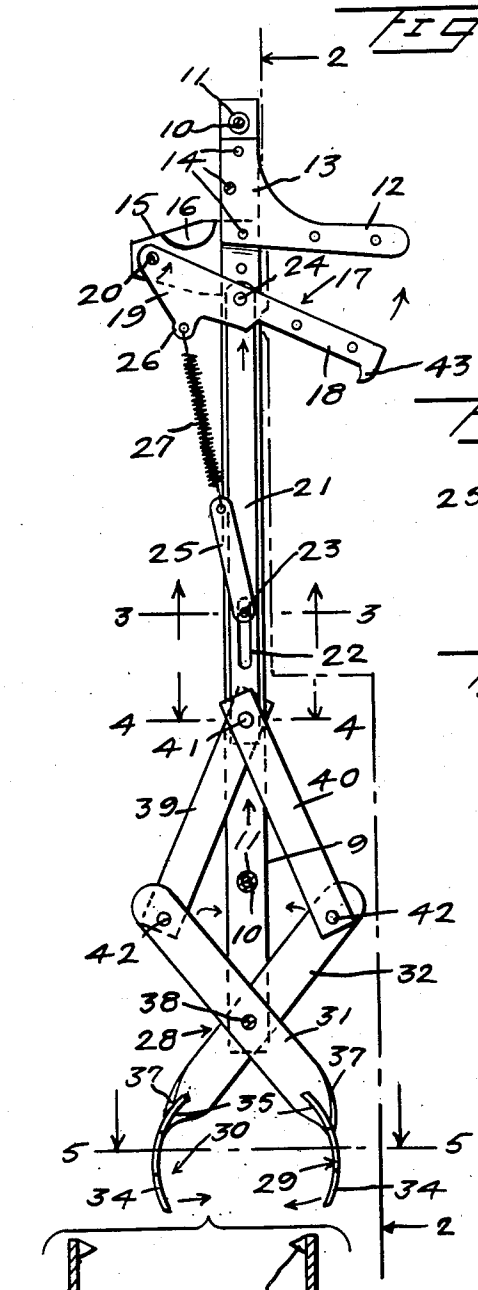

Fig. 2.

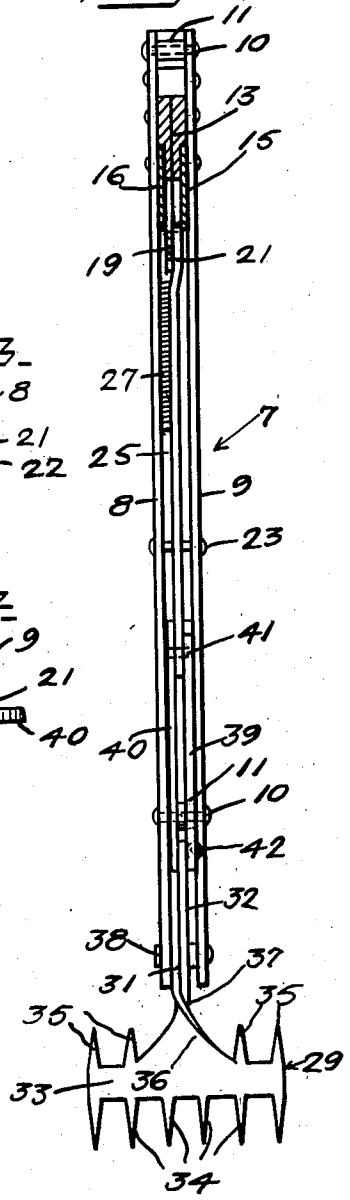

Fig. 3.

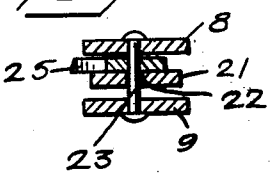

Fig. 4.

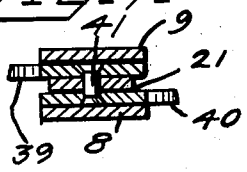

Fig. 5.

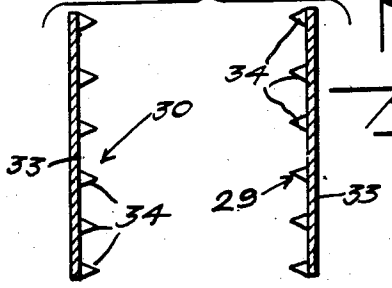

INVENTOR

E. F. Steffen

BY John N. Randolph

ATTORNEY

United States Patent Office 2,852,302 Patented Sept. 16, 1958

2,852,302

PICKUP DEVICE

Edward F. Steffen, Alvin, Tex.

Application June 17, 1957, Serial No. 666,075

4 Claims. (Cl. 294—117)

This invention relates to a pickup device for trash and refuse, especially bottles, cans and cups.

It is a primary object of the present invention to provide a pickup device which can be conveniently supported and manipulated by a person standing in an upright position for picking up refuse articles and trash from the ground and which is especially designed for picking up large objects such as bottles and cans without requiring the worker to stoop over to retrieve such objects.

During recent years the sides of highways have been cluttered with bottles, cans, paper cups and other trash and refuse thrown from motor vehicles. Collecting such items has proven very laborious for highway workers as it requires almost a constant stooping over.

Accordingly, it is an aim of the present invention to provide a device which is very light in weight so that it can be conveniently carried by a highway worker and which is so constructed that it will function effectively for picking up the various articles which litter the sides of highways including bottles, cans and cups, as well as other items of trash.

It is also a primary object of the present invention to provide a pickup device which is well adapted for use in cleaning trash from stadiums, fair grounds, picnic grounds and the like.

Various other objects and advantages of the invention will hereinafter become more fully apparent from the following description of the drawing, illustrating a presently preferred embodiment thereof, and wherein:

Figure 1 is a side elevational view, partly in section and partly broken away, showing the pickup device with one of the frame sides removed;

Figure 2 is an elevational view partly in longitudinal section, taken substantially along a plane as indicated by the line 2—2 of Figure 1; and

Figures 3, 4 and 5 are cross sectional views of the pickup device, taken substantially along planes as indicated by the lines 3—3, 4—4 and 5—5, respectively, of Figure 1.

Referring more specifically to the drawing, the pickup device in its entirety is designated generally 7 and includes two elongated bars 8 and 9 which are connected to one another and held in spaced apart relation by rivets 10 and spacing sleeves 11 which are disposed on said rivets and between the bars 8 and 9. Thus, said bars 8 and 9 constitute the frame of the pickup device 7. A handle 12 has an inner end portion 13 which is disposed within the frame 8, 9 and which is secured thereto by fastenings 14, adjacent the upper end of said frame. The handle 12 extends outwardly from one side of the frame between the bars 8 and 9 and is disposed substantially transversely of the frame. A pair of plates 15 and 16 are secured by fastenings 14 to the inner sides of the bars 8 and 9, adjacent the handle 12, and extend outwardly from the frame 8, 9 in the opposite direction to the handle 12.

A lever 17 comprises a handle 18 and a plate-like extension or strip 19 which is secured to and extends

from an inner end of the handle 18 through the frame between the bars 8 and 9 and which has a portion disposed between the mounting plates 15 and 16. The extension 19, adjacent its outer end, is swingably connected to and disposed between the plates 15 and 16 by a pivot fastening 20, which extends through the outer end thereof and through outer portions of said plates 15 and 16. A bar 21 is loosely disposed for longitudinal sliding movement between the frame bars 8 and 9 and has an upper end disposed beneath and spaced from the inner end 13 of the handle. Said bar 21, near to but spaced from its other lower end, is provided with a longitudinally elongated slot 22 which loosely engages a fastening 23 which extends through the frame and is anchored in the bars 8 and 9, for limiting the sliding movement of said bar 21 relative to the frame. The bar 21, adjacent its upper end, is connected to the strip 19 by a pivot fastening 24 which permits the lever 17 to swing relative to the bar 21. One end of a link 25 is pivotally connected to the fastening 23 between the bar 21 and the frame bar 8 and extends upwardly therefrom and outwardly of the frame toward the outer ends of the mounting plates 15 and 16. The strip 19, between and spaced from its pivots 20 and 24 is provided with a depending apertured ear portion 26 to which one end of a pull string 27 is connected. The other end of the pull spring 27 is connected to the opposite, upper end of the link 25. The spring 27 urges the lever 17 to swing downwardly away from the handle 12 and thus urges the bar 21 to slide downwardly in the frame 8, 9, away from the handle 12.

The pickup device 7 also includes a pair of tongs designated generally 28 comprising two corresponding jaws 29 and 30 and arms or shanks 31 and 32 which project from the jaws 29 and 30, respectively. Each jaw 29 and 30 includes an elongated intermediate portion 33 in the form of a solid bar or strip which extends from end-to-end of the jaw and which is provided with a plurality of corresponding teeth 34 which extend downwardly from the lower edge of the jaw portion 33. The teeth 34 taper toward their lower ends and are longitudinally spaced relative to one another with respect to the jaw portion 33. The jaw portion 33 is also provided with upwardly extending teeth 35 adjacent the ends thereof and which are likewise longitudinally spaced relative to one another and which also taper toward the outer ends thereof. Each jaw portion 33 has an integral upwardly extending tapered connector portion 36 which extends upwardly therefrom between the teeth 35, located adjacent each end thereof, and which connector portion 36 is twisted as seen at 37 through an arc of approximately 90° at its restricted upper end and merges with the arm or shank 31 or 32 of said jaw. The jaws 29 and 30 are transversely bowed from end-to-end thereof between the upper and lower edges thereof, as defined by the terminals of the teeth 35 and 34, and are disposed with the concave sides of said jaws facing inwardly or toward one another when the arms or shanks 31 or 32 are crossed relative to one another intermediate of their ends, as seen in Figure 1. Said crossed portions of the arms or shanks 31 and 32 are disposed between the lower ends of the frame bars 8 and 9 and are pivotally connected to one another and to the frame by a pivot fastening 38 which extends loosely through the shanks 31 and 32 and which is secured to the bars 8 and 9.

Complementary ends of a pair of links 39 and 40 straddle the lower end of the bar 21, beneath and spaced from the slot 22, and are pivotally connected thereto by a fastening 41. Said link ends are disposed between the frame bars 6 and 9. The links 39 and 40 extend downwardly and outwardly from the frame 8, 9 and have their opposite ends pivotally connected by fastenings 42

to the upper ends of the shanks 31 and 32, respectively.

The handle 12 may be held in the palm of either hand with the fingers of the same hand engaging around the handle 18. The pickup device 7 is of sufficient length, from the handle 12 to the jaws 29 and 30, so that if the device is held as just described by an adult standing in an upright position, the lower ends of the teeth 34 can contact the ground. The jaws 29 and 30 while in an open position, as illustrated in Figures 1 and 5, can be positioned over an article to be picked up such as loose trash, bottles, cans, paper cups or the like. The operator then exerts a squeezing pressure on the handles 12 and 18 for swinging the lever 17 upwardly and toward the stationary handle 12. This will cause an upward movement of the slide bar 21 and the links 39 and 40. Upward movement of the links 39 and 40 will cause an upward and inward pull to be exerted on the upper ends of the tong shanks 31 and 32 for causing said shanks to swing about the pivot 38 so that the lower ends of the shanks and the gripping jaws 29 and 30, which depend therefrom, will be swung inwardly, toward one another. Any of the refuse items aforementioned, not shown, can thus be gripped between the concave inner sides of the jaws 29 and 30 and the lower rake teeth 34 thereof are capable of closing to a sufficient extent, with the terminals of said teeth of the two jaws 29 and 30 substantially in contact with one another, so that any such refuse items can be gripped and picked up by the device 7. Any item thus held in the jaws 29 and 30 can be released to drop into any suitable container, not shown, by merely releasing the gripping pressure on the handle 18 to permit the spring 27 to swing the lever 17 downwardly and away from the handle 12, and so that said lever will exert a downward thrust on the bar 21 and links 39 and 40 for swinging the tong shanks 31 and 32 in the opposite directions to cause the jaws 29 and 30 to swing apart back to open positions as seen in Figures 1 and 5. The tapered lower teeth 34 of the jaws will act as rake teeth for raking the ground as the jaws are swung toward closed positions for grasping a refuse article to be picked up. The upper teeth 35 function as guard teeth to prevent any item which has been picked up from escaping from the upper edges of the jaws. The outer end of the lever handle 18 is preferably provided with a downwardly extending tapered projection forming a finger stop 43 which is adapted to be engaged by the litle finger of the hand used to operate the pickup device 7, to prevent the fingers slipping out of engagement with said handle 18.

Various modifications and changes are contemplated and may be resorted to, without departing from the function or scope of the invention as hereinafter defined by the appended claims:

I claim as my invention:

1. A pickup device comprising an elongated frame having an upper end and a lower end, a stationary handle fixed to the frame near the upper end thereof and projecting laterally in one direction from the frame, a pair of tong shanks having intermediate portions disposed in crossed relation to one another and pivotally connected to the lower end of the frame, said tong shanks having outer ends provided with gripping jaws disposed beyond the lower end of the frame, a bar slidably disposed in the frame between the handle and tong shanks, links connecting inner ends of the tong shanks to an adjacent end of the bar, a lever having an intermediate portion loosely disposed in the frame and pivotally connected to the opposite end of the bar, means projecting laterally from the frame near its upper end in a direction away from said handle and to which one end of said lever is pivotally connected, and the other free end of the lever forming a handle portion disposed beneath and adjacent said stationary handle and swingably movable toward the stationary handle by a gripping action for exerting a pull on the bar and links for swinging the tong shanks in directions for closing the jaws.

2. A pickup device as in claim 1, means slidably connecting the bar to the frame comprising a fastening extending through and anchored to said frame and an elongated slot formed in and disposed longitudinally of said bar for loosely engaging said fastening, spring means connecting the fastening and lever for urging the lever to swing downwardly for moving said tong jaws to an open position.

3. A pickup device as in claim 1, each of said tong jaws being elongated in a direction crosswise of the shank thereof and including a solid intermediate portion extending from end-to-end of the jaw, rake teeth extending downwardly from said intermediate portion in longitudinally spaced relation to one another, and guard teeth extending upwardly from said intermediate portion, said rake teeth and guard teeth being tapered toward the terminals thereof, and the shank having a twisted and flared end merging integrally with the intermediate portion of the jaw between certain of said guard teeth.

4. A pickup device as in claim 3, said jaws being transversely bowed from end-to-end thereof between the terminals of the rake teeth and guard teeth to provide concave inner sides disposed in opposed relation to one another.

References Cited in the file of this patent

UNITED STATES PATENTS

755,454	Clear	Mar. 22, 1904
786,663	McCoy	Apr. 4, 1905
923,299	Rogers	June 1, 1909
1,205,414	Titus	Nov. 21, 1916
1,220,899	Sorensen	Mar. 27, 1917
1,224,571	Schaier	May 1, 1917