United States Patent

Strauss, Jr.

[15] **3,697,911**

[45] **Oct. 10, 1972**

[54] **COIL FORM**

[72] Inventor: **William A. Strauss, Jr.**, Darling Hill Road, Mason, N.H. 03048

[22] Filed: **Jan. 20, 1971**

[21] Appl. No.: **108,028**

[52] **U.S. Cl.** **336/84,** 336/130, 336/192, 336/200, 336/225

[51] **Int. Cl.**.....**H01f 27/28**

[58] **Field of Search**.....336/200, 225, 223, 221, 178, 336/84, 130, 136, 192

[56] **References Cited**

UNITED STATES PATENTS

3,267,402	8/1966	Reimer	336/200
3,089,106	5/1963	Saaty	336/200
3,238,480	3/1966	Killoran	336/200 X
3,560,904	2/1971	Wilkes	336/200 X
3,002,260	10/1961	Shortt et al.	336/200 X
2,916,560	12/1959	Mathez	336/178 X
2,014,524	9/1935	Franz	336/200
2,911,605	11/1959	Wales, Jr.	336/200

Primary Examiner—Thomas J. Kozma
Attorney—John Noel Williams

[57] **ABSTRACT**

Configurations of conductor loops forming electromagnetic coil forms. A substrate carrying a conductor loop has a center opening through which a core protrudes, and while the core remains against the substrate, it passes over and under portions of the coil producing coupling. Also featured is a conductor loop folded upon itself suitable for receiving a core that passes over and under folded portions of one side of the loop to produce coupling. Provisions of multiple coils, convenient terminals and tuning are described.

17 Claims, 16 Drawing Figures

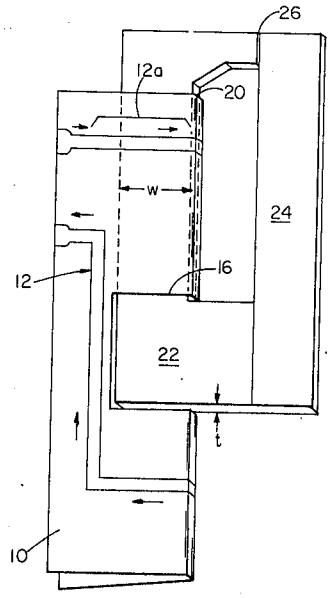

FIG 1

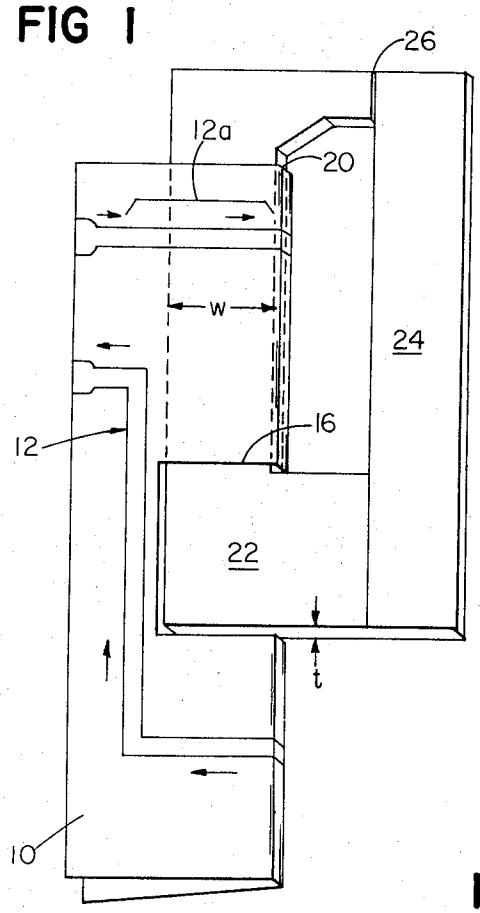

FIG 1a

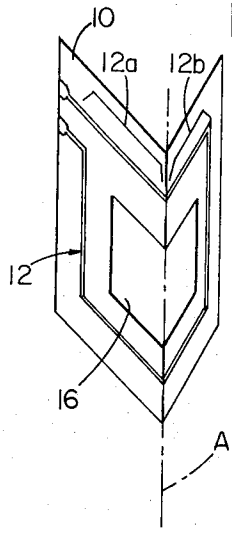

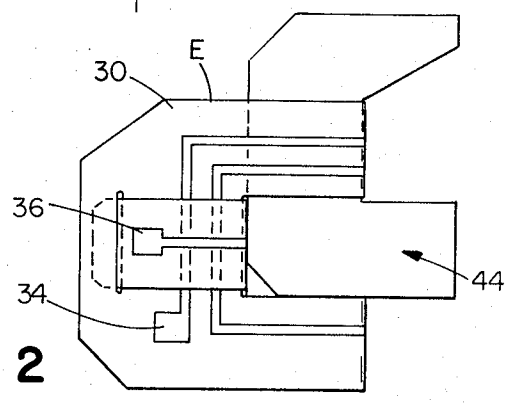

FIG 2

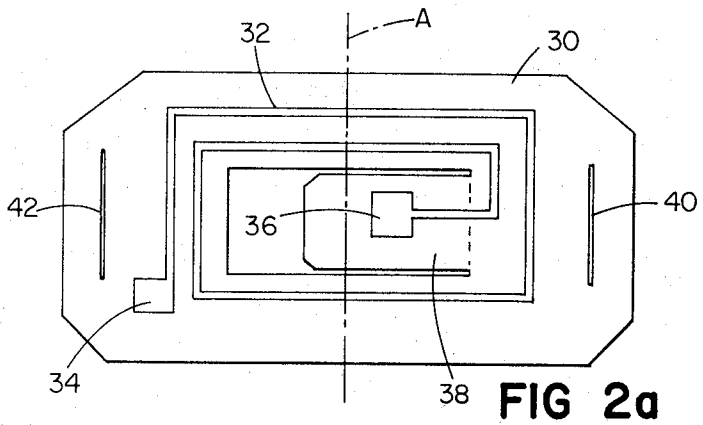

FIG 2a

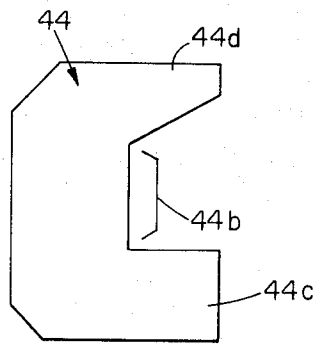

FIG 2d

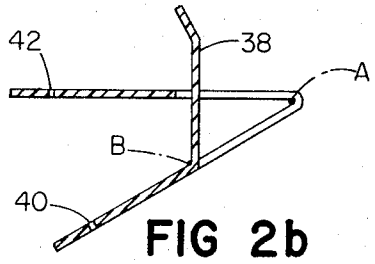

FIG 2b

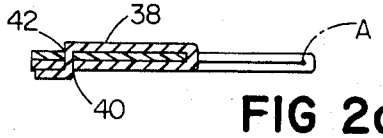

FIG 2c

FIG 3

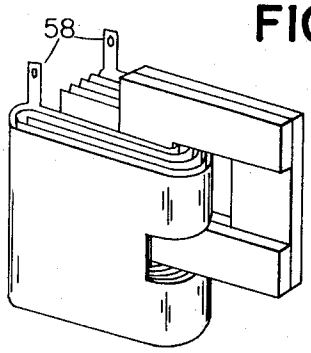

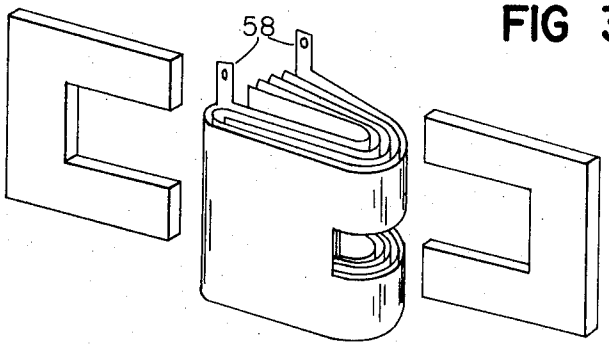

FIG 3a

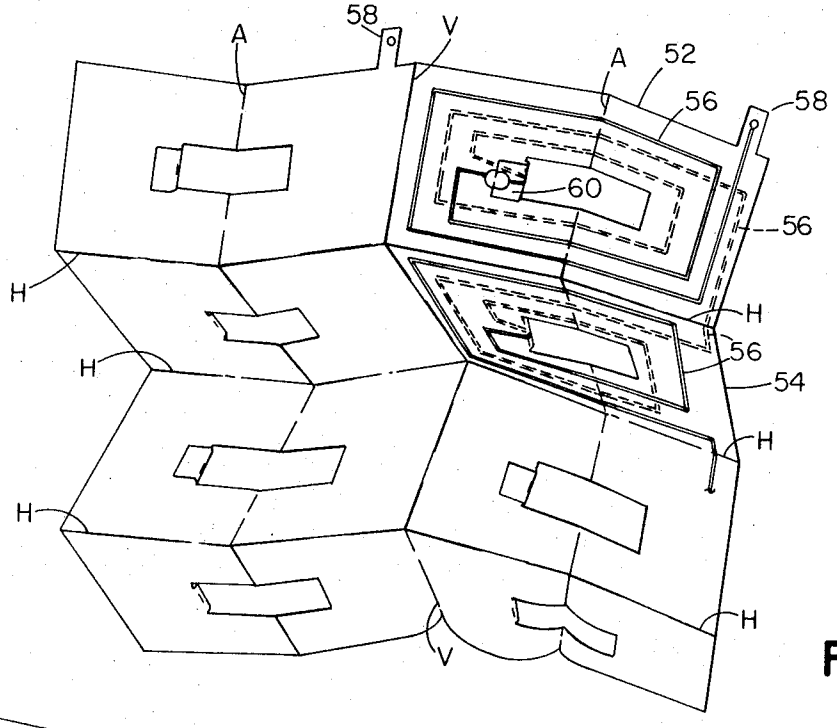

FIG 3b

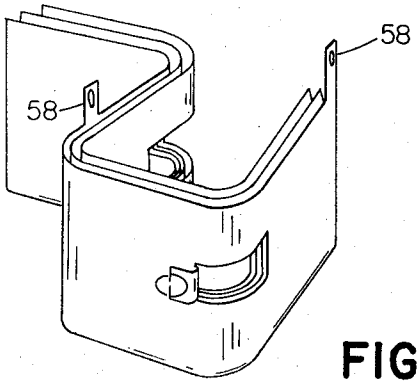

FIG 3c

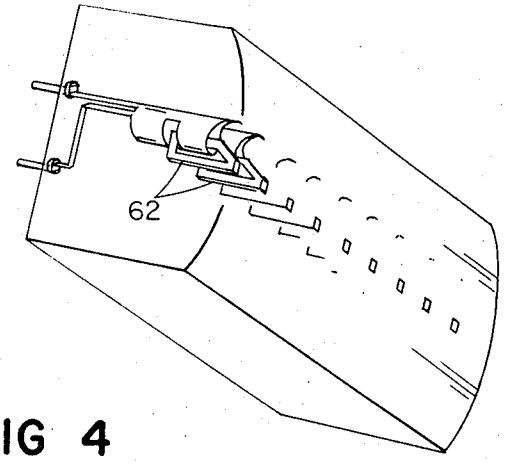

FIG 4

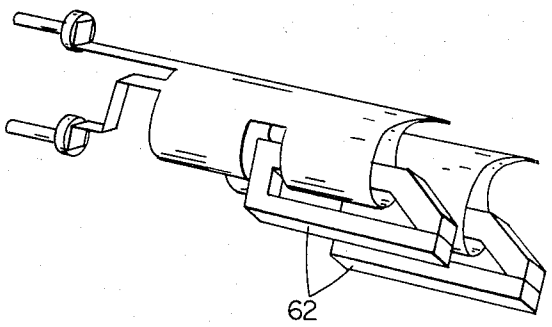

FIG 4a

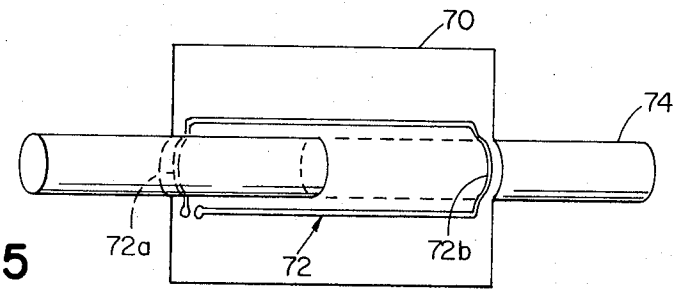

FIG 5

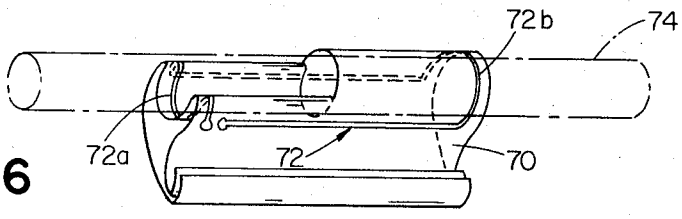

FIG 6

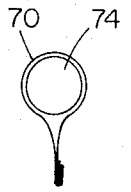

FIG 6a

COIL FORM

This invention relates to electromagnetic devices and in particular to coil and core assemblies.

An object of the invention is to enable effective replacement of the conventional wire wound coil form by an essentially two dimensional coil form, e.g., comprising a conductor path attached to a supporting material such as a printed circuit.

Previously it has been suggested to provide spiral forms of conductor patterns on flat supporting members, with a central aperture through which the core or pole piece has been mounted, much as an arrow pierces an archery target. Multiple windings have been constructed by providing a multiplicity of layers interconnected electrically. Such constructions occupy too much space and have the further disadvantage of positioning the winding at a distance from the inductive core element.

According to one aspect of the present invention a substrate carrying a loop or coil has an opening in the center and a core member lies substantially parallel to a portion of the substrate, but protruding through the opening. The core is shaped and positioned relative to the substrate so that the core overlies a first portion of the coil and underlies a second portion of the coil with resultant electromagnetic coupling.

According to another aspect of the invention a conductor path in the form of a loop or coil is folded upon itself so that portions of the loop on opposite sides of the fold carry current in opposite directions. A core member is disposed between these portions, thus exposed to their inductive fields, with resultant electromagnetic coupling. Advantageously an opening is provided within the loop through which the core may exit to complete a magnetic circuit without exposure to cancelling effects of other portions of the folded conductor loop. Certain embodiments feature multiple turns and a central portion of the substrate is folded outward to provide a convenient terminal for the interior lead; in other cases a second conductor in the opposite side of the substrate is connected across the thickness of the substrate to the interior lead of the coil, this second conductor (optionally in the form of a second coil) extends outward to provide a convenient terminal.

According to another aspect of the invention a laminar coil form is constructed, e.g., of a printed circuit or deposit on a flexible substrate, so that the center of the coil is free of conductors for a sufficient diameter to provide adequate clearance, and the form is folded around a core in the manner that the core does not extend beyond the center to a point where it intersects the conductors returning on the opposite side.

According to another aspect the core is allowed to intersect some but not all the conductors on the side of a loop past center, each turn intersected cancelling the inductive effect of a previous turn crossing the core originally. By making the core movable inductance can thus be adjusted through a tuning effect.

Two or more conductor loops on opposite sides of an insulated supporting structure or a multiplicity of loops on the same side separated by insulating layers may be employed. These loops may be serially connected electrically or isolated to provide, for example, a primary and secondary transformer winding.

The invention is advantageous where the core is of various shapes. For example, core forms common to the inductor industry such as C and I, EI, EE, F, UI and DU shapes may be employed in such a way that one or more coil forms may be slipped onto the legs and folded flat, replacing the coil form wound onto a bobbin or, alternatively, eliminating the need to wind the coil directly onto the leg of the core.

To illustrate, a typical inductive element used to read or write on magnetic tape such as that used by the computer industry takes the form of a "C and I" core. Thin metal laminations are prepared in thicknesses usually of 0.001 inch to 0.002 inch from a "soft magnetic material" such as an 80 percent Nickel 20 percent Iron alloy, suitably heat-treated to provide high initial magnetic permeability.

These laminations are then electrically insulated and exactly overlaid one upon the other and adhesively bonded in a stack of approximately 0.050 inch in thickness.

The ends of the legs of the C shaped stack are then ground flat as is one side of the I stack in such a way that when placed together a complete magnetic path or circuit is provided. A "gapping" material of a few millionths of an inch in thickness will be inserted between one leg of the C and the mating I so that magnetic flux will be forced to pass through the oxide coated tape moving by this gap.

According to previous techniques, the C-shaped member would then be wound with a coil so that magnetic flux can be induced in the core by a current passing through the coil in the "write" mode, or so that a current will be induced in the coil by the passing magnetic tape in the "read" mode.

In such practice the C-shaped core is prepared for its coil winding by first wrapping the waist or central portion with pressure sensitive insulating tape. Insulated Copper wire of a diameter in the range of 0.001 inch to 0.005 inch is then wound around the core to form a coil of a precise number of turns, typically 45 to 50 depending upon the particular design. The coil must then be secured in place by again wrapping with pressure sensitive tape or by dissolving an adhesive coating on the wire if such a coating has been provided. The ends of the leads must then be stripped of insulation to prepare them for electrical connection.

This series of operations normally requires about 15 minutes. There are 18 such cores and windings in a typical 9 channel head used by the computer industry.

According to the present invention a spiral conductor pattern is prepared in the form of a conductive coating or a suitable thin foil temporarily or permanently supported by a thin flexible material which may be a dielectric such as polyester or polyimide film, or even a thin metal sheet with suitable insulative layer.

This conductor pattern which I call a flexible printed circuit coil form, can be in the form of a conductor etched in 0.0005 inch thick Copper foil, spaced 0.010 inch apart on center 0.005 inch wide. Fifty turns can readily be provided around a rectangular clear area or window at the center. If the height or minor dimension of the window is sufficient, one leg of the "C" may pass through a vertical slit in the window or through the window area if it has been completely or partially cut away. The length or major dimension of the window area

should approach twice the width of the portion of the core to be wound plus approximately twice the thickness of the core stack.

Thus, a pre-prepared coil form with terminals previously provided for connection may be slipped in the core, greatly reducing assembly time as well as reducing the overall thickness of the wound core assembly. It will produce the same general input-output characteristics as a conventional coil form.

Referring now to the drawings:

FIG. 1 is a perspective view of a preferred embodiment of the invention comprising a C and I core to which a coil form is applied;

FIG. 1*a* is a perspective view of the coil form of FIG. 1;

FIG. 2 is a side view of another preferred coil and core assembly, FIG. 2*a* is a side view of the coil form of FIG. 2 in unfolded position, FIGS. 2*b* and 2*c* are cross-sections along the center line during folding and FIG. 2*d* is a side view of the core;

FIG. 3 is a perspective view of another embodiment, FIG. 3*a* is an exploded view thereof, and FIGS. 3*b* and 3*c* are views of the coil form of FIG. 3 at various stages of folding;

FIG. 4 is a diagrammatic view of a magnetic recording head and FIG. 4*a* is a perspective view of core assemblies thereof;

FIG. 5 is a side view of another core assembly; while

FIGS. 6 and 6*a* are perspective and end views thereof in folded condition.

Referring to FIGS. 1 and 1*a*, a substrate 10 of electrically insulating material such as polyester film (Dupont's Mylar) carries on one side a printed circuit conductive loop 12. An opening 16 is provided in the center region and the member is folded about axis A, which passes through the center region 16. Referring to loop 12 in FIG. 1*a*, portion 12*a* of the loop on the left side of axis A of the fold carries current in opposite direction (after folding) from the direction of current in portion 12*b* on the opposite side of the fold. Referring to FIG. 1, the C form core member 20 is inserted through an outer edge of the fold, the core lying under loop portion 12*a* and over loop portion 12*b* of the folded substrate. The core forms an angle in the center region, core portion 22 exiting through opening 16. Core portions including I section 24 external of the folded coil form complete the magnetic circuit with gap 26 formed between one leg of C section 20 and I section 24. The core is of a width w greater by a substantial factor, e.g., 10, from the thickness t of the core, and opposite portions of the substrate lie against corresponding flat sides of the core. Advantageously these surfaces have adhesive, (e.g. a layer of pressure-sensitive adhesive in the inner side of the substrate) bonding the coil form and core together. From the compact relationship of core and substrate shown in FIG. 1 the side portions of the substrate lying beyond the core can be further folded or rolled to make a smaller package.

Coil forms embodying the invention just illustrated may be used for various purposes to which coil forms are put, i.e., to detect or generate electromagnetic fields, and as transformer windings, inductively coupled logic networks, relays, rotating electrical equipment, etc. In such cases they can contribute to low cost, compactness, ease of assembly, lightness of weight, etc.

While for ease of illustration loops are shown on the outside surface of the substrate, they can be placed only on the inside surface next to the core, with suitable insulation. Then the substrate can have electromagnetic shielding properties preventing one assembly from affecting the next adjacent assembly, resulting in considerable advantage and permitting close packing.

Referring to FIGS. 2 – 2*d* in this embodiment a substrate 30 carries a conductor loop 32 of greater than one turn, having outer terminal 34 and inner terminal 36. A central opening is formed in the substrate through which is established a fold axis A. The cut portion from the center is left as a tab protruding from one side of the opening toward the fold axis, and the inner terminal 36 resides on this tab. After the member is folded about axis A the tab 38 is bent down (about an axis B, parallel to but spaced from axis A) through the opening in the opposite part of the member (FIG. 2*b*) positioning inner terminal 36 adjacent to terminal 34, for ease of connection to external circuits. If the substrate is of sufficient stiffness, e.g., of insulating paper or anodized metal, it is inserted through slits 40, 42 in the two legs of the fold, securing the two legs together and at the same time positioning the terminal.

This coil form is shown in FIG. 2 utilized by insertion of a C shaped core 44 (FIG. 2*d*) so that the backbone 44*b* of the core extends from edge E of the substrate to the central opening while upper leg 44*c* of the core protrudes through the opening and lower leg 44*d* lies wholly beyond the coil form.

Referring to FIGS. 3 – 3*c* a single flexible substrate of insulating material has multiple panels 52, 54, etc., each carrying conductor loops 56 on front and back. The panels are connected to each other through horizontal folds H and vertical folds V. The individual panels and the loops thereon are also folded upon themselves along axis A. The conductor loops are connected in series through tabs 58, 60 which are bent from one to the reverse side and there affixed. Each tab carries a terminal of one loop into electrical contact with a terminal of the loop on the reverse side, tabs 58 being on the outside of the loops and tabs 60 on the inside of the loops.

A multiple winding coil is formed by folding the substrate as indicated. Openings within the loops on each panel register with each other, providing an opening through the entire core. A core protrudes through this opening in the general manner previously described.

In other embodiments the coils on opposite sides may be connected by conductive material extending across the thickness of the substrate; in other embodiments the coils may be electrically separate, i.e., for use on transformers.

Referring to FIGS. 4 and 4a a multiple channel recording head is formed by individual core members 62 mounted side by side, each assembled with a coil form in the manner described above.

Referring to FIG. 5 there is shown a planar substrate 70 carrying a conductive loop 72 and having a slit in the center. A core member 74 of rod form lies substantially parallel to the substrate but protrudes through the slit. It has sufficient length to extend across the loop 72, the core lying over loop portion 72*a* and under loop portion 72*b*, portions 72*a* and 72*b* carrying current in opposite directions with resultant electromagnetic

coupling. Here again, use is made of conductor segments which do not fully surround the core, but provide limited C-shaped envelopments, that effect coupling.

In FIG. 6 and 6*a* a coil form is shown similar to FIG. 5, arranged to receive a parallel core, but made more compact by folding back of the outer portions of the substrate.

It will be understood that various specific details can be varied within the spirit and scope of the claims.

What is claimed is:

1. In an electromagnetic device, a substrate carrying bodily a preformed conductive loop, said loop defined by conductive material extending about a center region on the substrate, an opening in the substrate in said center region of said loop and a core member lying substantially parallel to the substrate, said core member protruding through said opening, one portion of said loop upon said substrate overlying and one portion of said loop carrying opposite travelling current underlying said core, each said portion lying at a substantial angle to the axis of said core with resultant electromagnetic coupling.

2. In an electromagnetic device, a conductor in the form of a preformed loop, said loop folded upon itself about a line projected across said loop, defining a saddle-like configuration, so that current flowing in a given sense through said conductor progresses in opposite directions in first and second portions of the conductor that lie generally on the same side of the loop but on opposite sides of the fold, a core member disposed within said fold between said conductor portions in a position exposed to the inductive fields of said portions, said portions cooperating to provide effective electromagnetic coupling with said core.

3. The electromagnetic device of claim 2 wherein the remainder of said loop lies beyond said core, preventing cancellation of the combined inductive effect on said core of said first and second portions.

4. The electromagnetic device of claim 2 wherein said loop has multiple turns, each turn being folded and said core being disposed therewithin.

5. The electromagnetic device of claim 2 wherein said conductor path is carried by a substrate that is folded upon itself.

6. The device of claim 5 wherein said substrate is flexible and is secured in folded position.

7. The device of claim 6 wherein said loop comprises a printed circuit on said flexible substrate.

8. In an electromagnetic device, a conductor in the form of a preformed loop, said loop folded upon itself about a line projected across said loop so that current flowing in a given sense through said conductor progresses in opposite directions in first and second portions of the conductor that lie on opposite sides of the fold, a core member disposed within said fold between said conductor portions in a position exposed to the inductive fields of said portions, said portions cooperating to provide effective electromagnetic coupling with said core, said loop being carried on a substrate, said substrate having an opening within said loop, said substrate being folded with the line of fold projected through said opening, and an extension of said core extending through said opening.

9. The device of claim 8 including magnetic portions beyond said loop associated with said core to define substantially a magnetic circuit.

10. The device of claim 2 wherein said electromagnetic device is disposed in a head member in close-packed relation to adjacent such devices for use with magnetic tape.

11. A printed circuit coil form comprising a conductive pattern, in the form of a loop, on a substrate, an opening in said substrate in the center region of said loop and folded in saddle-like configuration along an axis passing through a mid-portion of this opening about a core, said core entering the coil form from an outer edge thereof and exiting through said opening.

12. A structure as described in claim 11 wherein said coil form comprises a laminated assembly of more than one layer of conductor patterns connected serially.

13. A structure as described in claim 11 wherein said coil form comprises more than one conductor pattern electrically isolated from each other.

14. A structure as described in claim 11 including a flexible layer which provides a shielding effect.

15. A structure as described in claim 11 including a flexible layer serving as an adhesive to bond the folded structure to another portion of the assembly.

16. A coil forming structure comprising a conductor pattern of one or more turns forming a coil supported in insulated condition upon a flexible carrier, with an area within the coil form free of conductors, said structure folded in saddle-like configuration on a predetermined axis passing through this conductor-free area and core material is placed within the folded structure between portions of the coil on opposite sides of said axis.

17. An assembly as described in claim 16 with means enabling the core material to be adjusted in position so that it adjustably extends beyond the opening or conductor-free area and intersects one or more conductor turns a second time, thus reducing the effective turns by the number of turns intersected twice, thereby, providing a means of tuning inductance.

* * * * *