3 Sheets--Sheet 1.

J. SHORT.

Yarn-Printing Machine.

No. 168,932. Patented Oct. 19, 1875.

Fig. 1.

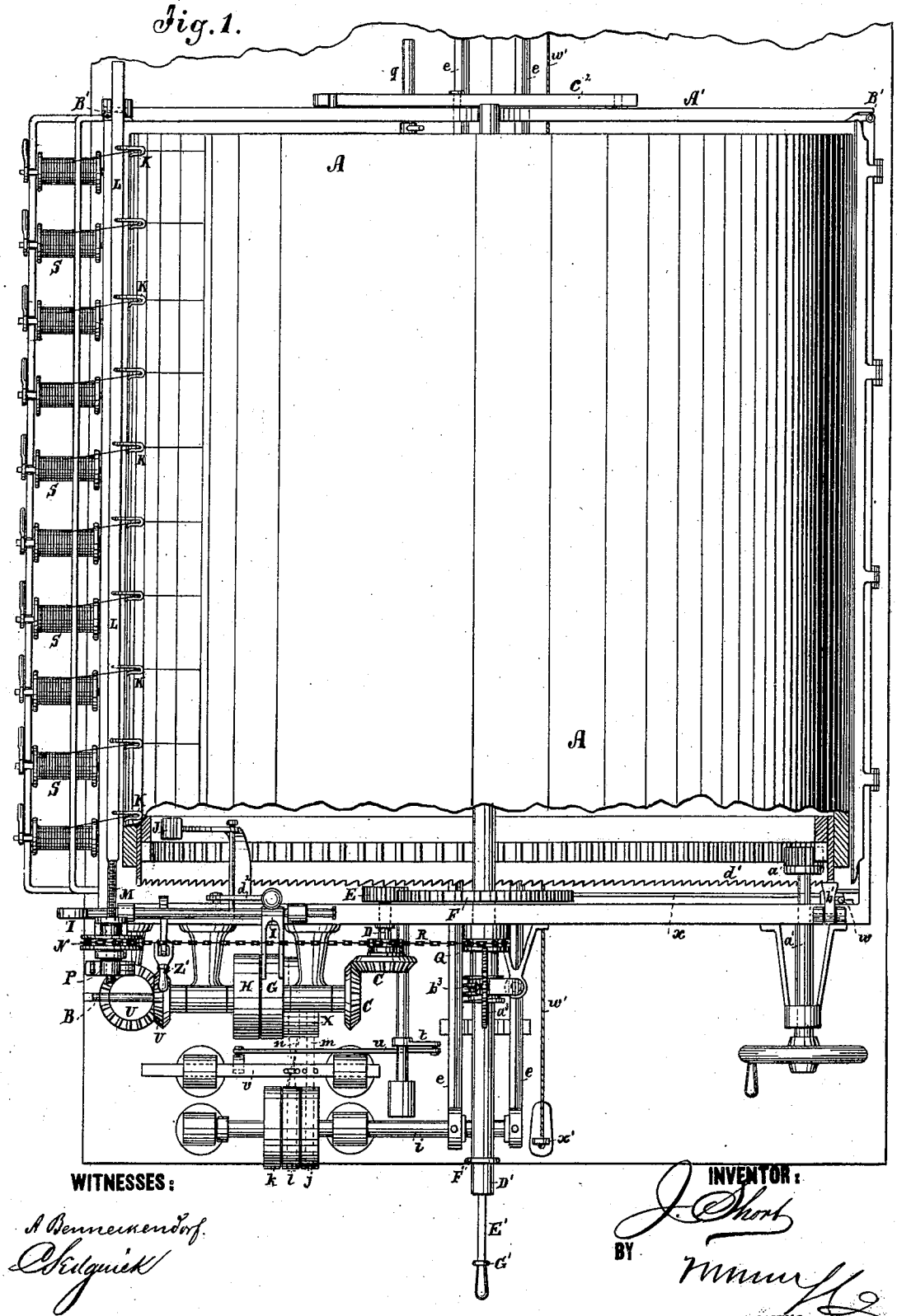

WITNESSES:

A. Bennenendorf.

Sedgwick

INVENTOR:

J. Short

BY

Munn & Co

ATTORNEYS.

N. PETERS, PHOTO-LITHOGRAPHER, WASHINGTON, D. C.

3 Sheets--Sheet 2.

J. SHORT.

Yarn-Printing Machine.

No. 168,932. Patented Oct. 19, 1875.

Fig. 2.

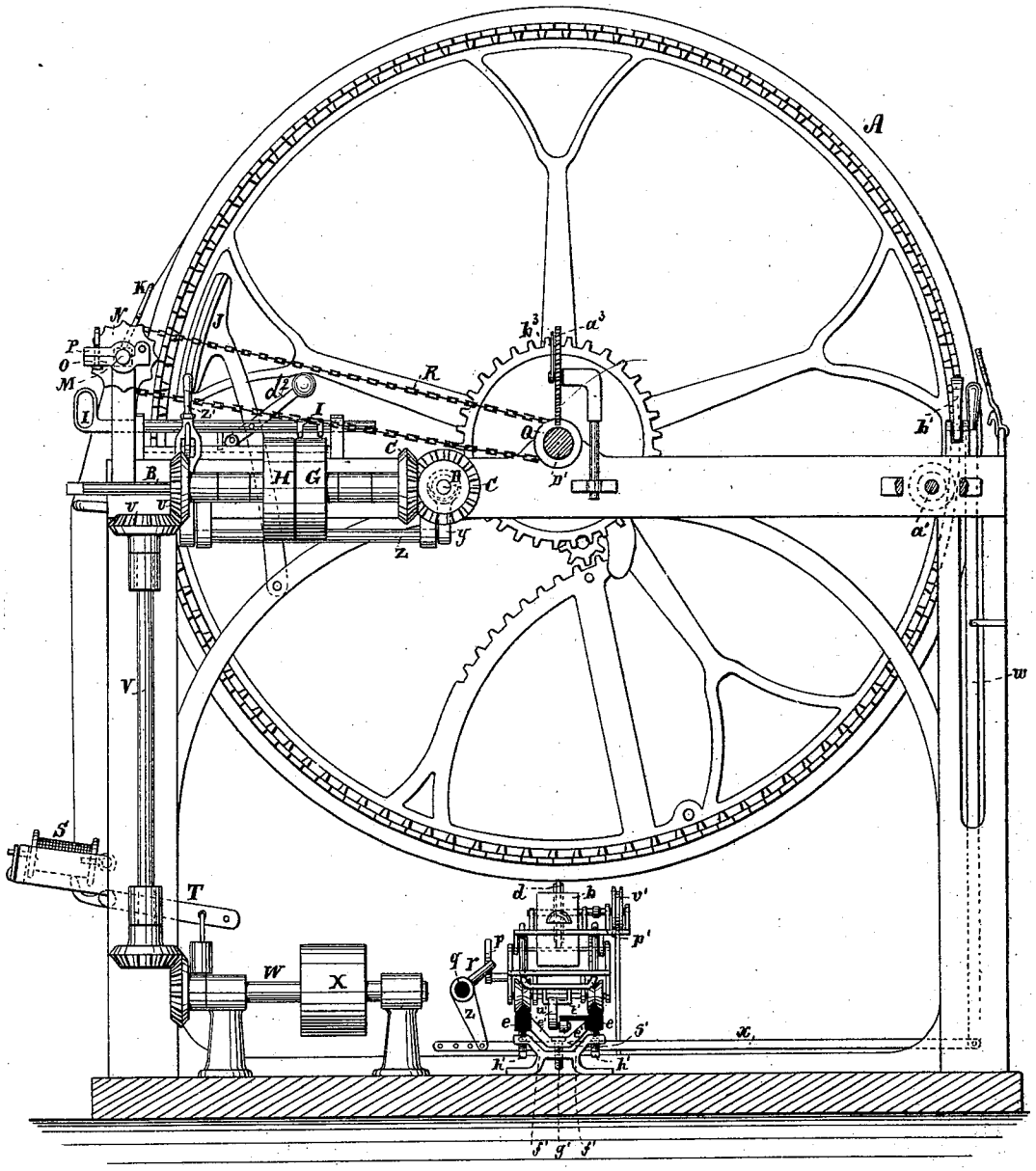

WITNESSES:

A Benneckendorf.

C Sedgwick

INVENTOR:

J. Short

BY

[signature]

ATTORNEYS.

N. PETERS, PHOTO-LITHOGRAPHER, WASHINGTON, D. C.

3 Sheets--Sheet 3.

J. SHORT.

Yarn-Printing Machine.

No. 168,932.

Patented Oct. 19, 1875.

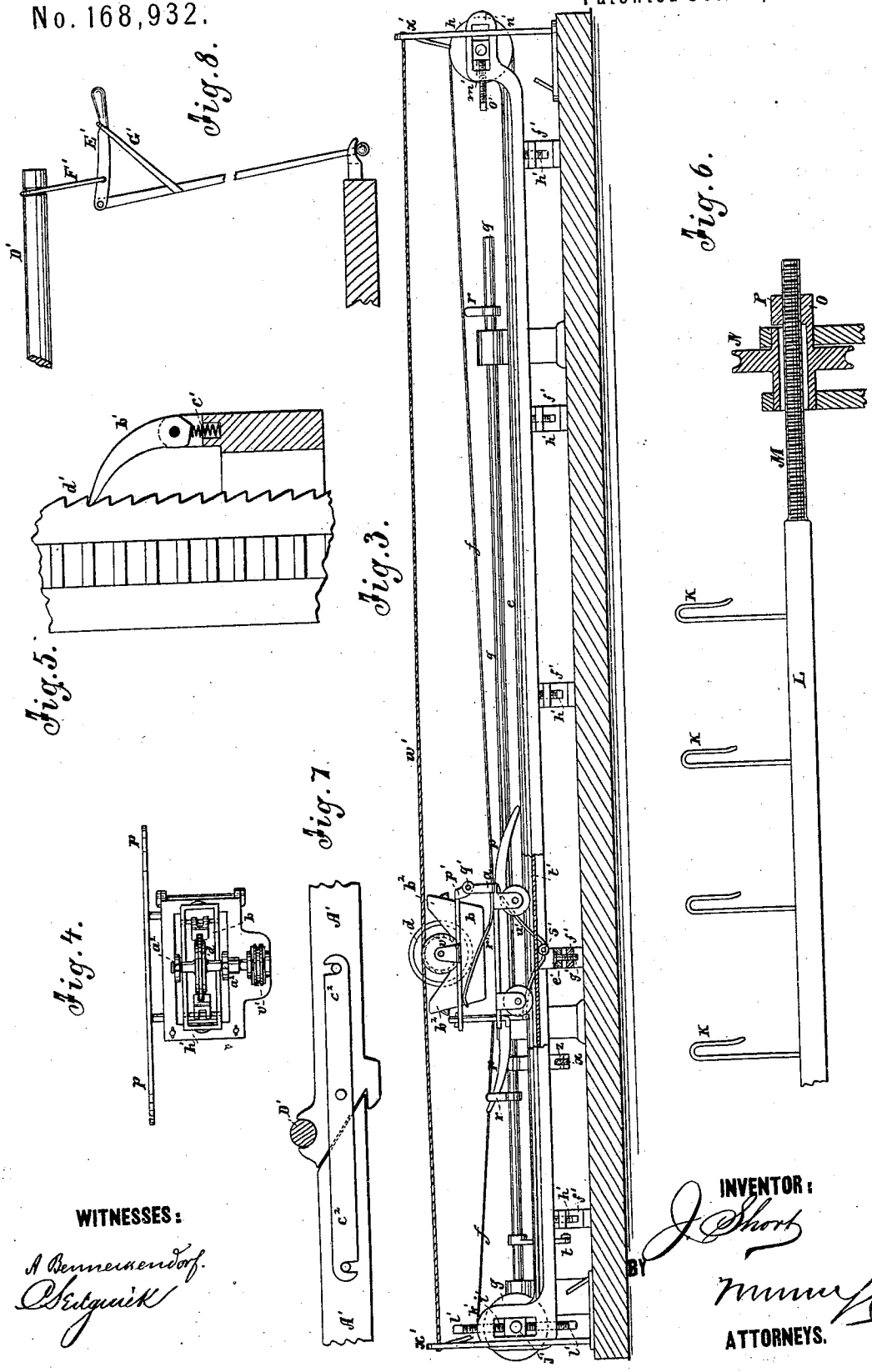

WITNESSES:

A Benneckendorf.

C Seitgwick

INVENTOR:

J. Short

BY

Munn & Co

ATTORNEYS.

N. PETERS, PHOTO-LITHOGRAPHER, WASHINGTON, D. C.

UNITED STATES PATENT OFFICE.

JAMES SHORT, OF NEW BRUNSWICK, NEW JERSEY.

IMPROVEMENT IN YARN-PRINTING MACHINES.

Specification forming part of Letters Patent No. **168,932**, dated October 19, 1875; application filed March 13, 1875.

To all whom it may concern:

Be it known that I, JAMES SHORT, of New Brunswick, in the county of Middlesex and State of New Jersey, have invented a new and Improved Drum for Printing Yarns and Threads, of which the following is a specification:

My invention consists of certain new and useful improvements in the combinations and arrangements of the operative mechanism of a thread-printing drum, as hereinafter described, whereby it is designed to provide more simple and efficient printing-drums than are now made.

Figure 1 is a plan view of my improved machine, with a part of the cylinder sectioned. Fig. 2 is partly an end elevation and partly a transverse section. Fig. 3 is a side elevation of the railway and car for carrying and applying the colors, with a detail in section. Fig. 4 is a plan view of the printing-car. Fig. 5 is a detail of the pawl for holding the drum, and Fig. 6 is a detail of the traverse-guide mechanism for the thread. Figs. 7 and 8 are details of the apparatus to be employed for adjusting the cylinder for shipping off the yarn.

Similar letters of reference indicate corresponding parts.

A represents the printing-cylinder, which, in itself, is in all respects the same as in other machines. B is the shaft for driving the cylinder by means of the wheels C, counter-shaft D, pinion E, and wheel F, the shaft B being provided with a fast pulley, G, and a loose pulley, H, for the driving-belt. I is the belt-shipper for throwing the belt from one to the other of the pulleys G H for starting and stopping the cylinder. With this shipper is combined a friction-brake, J, for stopping the cylinder, so arranged that when the shipper is moved to stop the cylinder it also throws the brake in contact with it, thus saving the necessity of the operator making two movements to stop the cylinder. A weighted lever, d^2, is connected to the brake-lever to hold it in contact with the cylinder when stopping it, and out of contact with it when rotating. To this end said weighted lever is so pivoted as to vibrate in a vertical plane. As shown, Fig. 2, it is inclined to the right, as required, to hold the brake out of action. The threads to be printed are wound on the cylinder by the aid of traverse-guides K, as in other printing-machines, the guides being attached to a bar, L, which is caused to traverse the length of the distance between the guides while covering the cylinder by a revolving screw-nut turning on the screw-threaded part M of the rod. I make the eye of the pulley large enough to slide the screw-threaded part of the bar in and out of it readily, to facilitate the putting of the rod in and taking it out, and provide a nut of two parts, O P, attached to or formed on one side of the pulley, the two parts being jointed and provided with a clamp-nut and bolt, to be unfastened when the rod is put in or taken out, and be fastened when the rod is in, thus providing a nut with which there can be no possibility of the rod slipping the threads of the nut, and, at the same time, having an arrangement which avoids the necessity of using a divided pulley, or employing a screw-shaft separate from the rod which reciprocates the yarn-guides, and connecting them by means of a screw-clamp, as in other machines. The periphery of nut N has the form of the corresponding portion of a sprocket-wheel, as also the pulley O on the cylinder-shaft, to prevent slipping of chain R. The threads are drawn from the bobbins S in the usual way, said bobbins having friction-brakes T for regulating the tension. The motion for driving the printing-car is also obtained from the driving-shaft B, which gears by pinions U with the vertical shaft V, which, at its lower end, turns the counter-shaft W, on which is a driving-pulley, X, which drives the car. The car is connected with driving-shaft B, so that it is driven by power mechism; and as the car runs when the cylinder is required to rest, I make provision for disconnecting the cylinder from the driving-shaft B by having the wheel C on the counter-shaft D shift in and out of the other wheel by a lever, Y, on a rock-shaft, Z, having a hand-lever, Z^1, for working the wheel, and a spring-catch, Z^2, for holding the lever arranged in proximity to the shipper I, where both shipper-levers will be alike under the control of the operator.

a represents the car for carrying the color-box *b* and printing-roller *d*. Said car is mounted on the rails *e*, and driven by a belt, *f*, attached to it at both ends, and running over the driving-pulley *g* at one end of the way,

and the idle-pulley h at the other end. The driving-pulley is mounted on the shaft i, having two loose pulleys, j and k, on it, and a fast pulley, l, between them, on which one straight belt, m, and one crossed belt, n, work from the broad driving-pulley X, to drive the car forward and backward under the cylinder, the belts being shifted each time the car passes under the cylinder, to reverse the car and move it the other way. The car is automatically stopped after passing under the cylinder by the curved projecting rod p on the car, which at one end turns the rod q one way, and at the other end turns it the other way by acting on the arms r of said rod, which is connected by an arm, t, and rod u with the belt-shipper v.

The car is started each time by the attendant with the hand-lever w, which is connected by a rod, x, and an arm, z, with the rod q. The lever w is arranged at the place where the attendant stands to watch the pattern according to which the yarn is to be printed, and to shift and adjust the cylinder according to said pattern, by the hand-crank shaft a^1 and pawl b^1. This pawl is contrived with two faces at an obtuse angle at its lower end, and provided with a spring, c^1, for holding it, both when in connection with the ratchet d', and when thrown out of connection, so that it will not be displaced by the jarring of the mill and other like disturbing influences. I construct the rails e, and their connecting-bars or ties e', by casting them altogether, and mount them on the stands f', with the holding-down screws g', and adjusting-screws h', so that I can at any time line up, level, and adjust the track to the cylinder, as I may want to do, and in order to adjust the pulley g relatively to the rails for adjusting the belt f to draw properly, and at the same time have its shaft mounted on the rails, I provide slots i' in the vertical housings k of the rails, for the bearings j' in the shaft i, and provide adjusting-screws l', to shift the bearings up and down, as may be required. The idle pulley h, at the other end of the rails, is journaled in bearings m, which are adjusted horizontally in housings m', by means of screws O', to take up slack of the belt f''. The color-box b, of the car rests on a little frame, p', which is pivoted at q' at one end, and rests at the other end on springs r', which hold the roller d up to the yarn on the cylinder with an elastic pressure, and in order to prevent the car from jumping off the track by the impulse of the springs r', when the roller d escapes from under the cylinder, a little guard-roller, s', is carried under a guard-rail, t, by the bar u'. The color-roller d, has a pulley, v', on its shaft, around which a cord, w', passes, said cord being made fast to the posts x', to turn the color-roller when it is not under the cylinder, so that it will not stand and allow the color to run down from the upper part, by which it would fail to print sufficiently some of the threads at the margins of the cylinders. This color-roller has to be taken out and put in its bearings a^2, frequently, and it is therefore necessary to have the sides of the ink-box as low as the axis at the middle, and it has been customary to make them only that height all round, but to prevent the color-liquid slopping over at quick starting of the box, the ends thereof are extended upward, as shown at b^2, as high as the roller. The roller d is made mainly of cheap metal, and coated with a composition adequate to resist for a long time the acids of the color matter. a^3 is a dial, and b^3 a pointer, forming a register for showing the number of times the threads are wound on the cylinder. For removing the end support A' of the cylinder, to allow of stripping the yarn off from the cylinder when printed, I propose to make said support in two parts, meeting at the middle, and hinged to the frame at the ends B', to swing open when relieved of the weight of the cylinder, and having a button-bar, c^2, for fastening them together; and, for lifting the cylinder-shaft off from the bearing in the support A, I have the shaft extended at the other end, D', to use as a lever for raising and holding the cylinder, and with the said extension I have a short lever, E', link F', and a holding-hook, G'.

Having thus described my invention, I claim as new and desire to secure by Letters Patent—

1. The combination of the two-part jointed nut O P, connected with the pulley N, and rod L M, the hole of the pulley being adapted to slide the rod in and out of it, substantially as specified.

2. The counter-shaft W, pulley X, belts m n, pulleys j k l, shipper v, arm t, rod u, arms r, and the curved bars p on the car, in combination with the car-driving pulley g, substantially as specified.

3. The rails e and cross-ties e', formed together in one piece, and combined with the supporting-stands f', fastening-screws g, and adjusting-screws h', substantially as specified.

4. The bearings j', for the driving-pulley shaft i, arranged in vertical slots i', and with adjusting-screws l', in combination with the vertically-adjustable rails, substantially as specified.

5. The jointed and hinged supporting-bar A', and the fastening-bar c^2, in combination with the cylinder A, substantially as specified.

6. The hand-lever E', link F', and hook G', combined with the extension D' of the cylinder-shaft, substantially as specified.

7. The weighted vibrating lever d^2, the cylinder-brake J, belt-shipper I, and its sliding rod, all combined, as shown and described, to operate as specified.

JAMES SHORT.

Witnesses:

THOMAS SHORT,

CHARLES LIEBERUM.