(12) PATENT **(11)** Application No. **AU 199531288 B2**
(19) AUSTRALIAN PATENT OFFICE **(10)** Patent No. **714817**

(54) Title
Miniature linear motion actuator

(51)[6] International Patent Classification(s)
H02N 002/04

(21) Application No: **199531288** (22) Application Date: **1995.07.14**

(87) WIPO No: **WO96/02950**

(30) Priority Data

(31) Number	(32) Date	(33) Country
08/275835	**1994.07.15**	**US**

(43) Publication Date : **1996.02.16**
(43) Publication Journal Date : **1996.03.28**
(44) Accepted Journal Date : **2000.01.13**

(71) Applicant(s)
Micro Medical Devices, Inc.

(72) Inventor(s)
Dennis L Polla; David J Peichel; Arthur G. Erdman; John A. Costin

(74) Agent/Attorney
DAVIES COLLISON CAVE,1 Little Collins Street,MELBOURNE VIC 3000

(56) Related Art
US 4894579
US 4195043

OPI DATE 16/02/96 APPLN. ID 31288/95
AOJP DATE 28/03/96 PCT NUMBER PCT/US95/08879

AU9531288

(T)

(51) International Patent Classification 6 :
H01L 41/08

A1

(11) International Publication Number: WO 96/02950

(43) International Publication Date: 1 February 1996 (01.02.96)

(21) International Application Number: PCT/US95/08879

(22) International Filing Date: 14 July 1995 (14.07.95)

(30) Priority Data:
08/275,835 15 July 1994 (15.07.94) US

(71) Applicant: MICRO MEDICAL DEVICES, INC. [US/US]; 11900 Gore Orphange Road, Wakeman, OH 44889 (US).

(72) Inventors: POLLA, Dennis, L.; 9228 Loch Lomond Court, Brooklyn Park, MN 55443 (US). PEICHEL, David, J.; 757 Sextant Avenue, Roseville, MN 55113 (US). ERDMAN, Arthur, G.; 1957 3rd Street S.W., New Brighton, MN 55112 (US). COSTIN, John, A.; 6841 Cliffside Drive, Vermilion, OH 44089 (US).

(74) Agents: PATTERSON, James, H. et al.; 527 Marquette Avenue South, 1200 Rand Tower, Minneapolis, MN 55402 (US).

(81) Designated States: AM, AT, AU, BB, BG, BR, BY, CA, CH, CN, CZ, DE, DK, EE, ES, FI, GB, GE, HU, IS, JP, KE, KG, KP, KR, KZ, LK, LR, LT, LU, LV, MD, MG, MN, MW, MX, NO, NZ, PL, PT, RO, RU, SD, SE, SG, SI, SK, TJ, TM, TT, UA, UZ, VN, European patent (AT, BE, CH, DE, DK, ES, FR, GB, GR, IE, IT, LU, MC, NL, PT, SE), OAPI patent (BF, BJ, CF, CG, CI, CM, GA, GN, ML, MR, NE, SN, TD, TG), ARIPO patent (KE, MW, SD, SZ, UG).

Published
With international search report.
Before the expiration of the time limit for amending the claims and to be republished in the event of the receipt of amendments.

(54) Title: MINIATURE LINEAR MOTION ACTUATOR

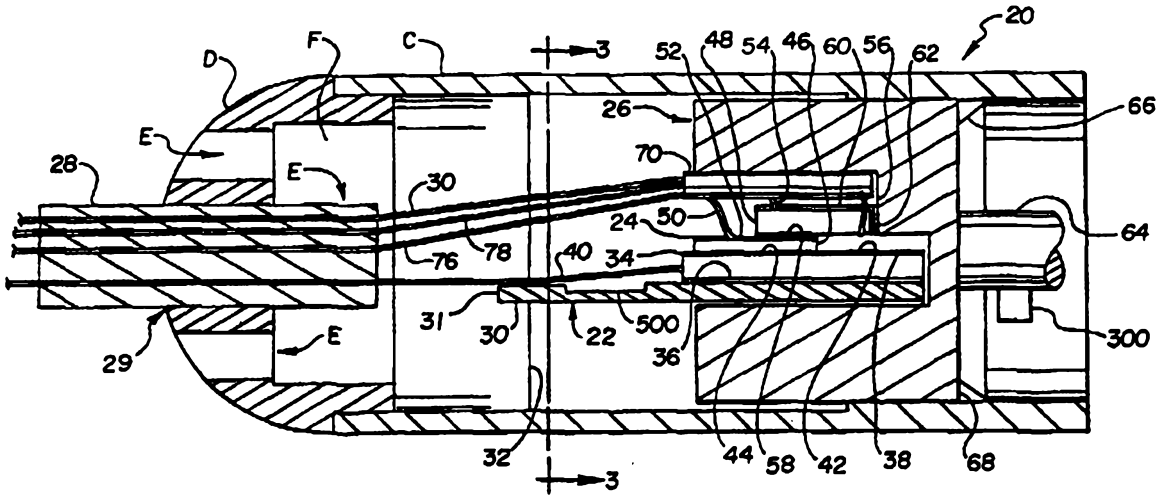

(57) Abstract

A linear actuator device (20). A first mode of operation uses a single clamping technique whereby a piezoelectric element is slowly expanded, in a way such that a clamping force between that element and its base (38) holds it in place. The piezoelectric element (48) is then contracted in size very quickly, and inertia created by that action overcomes the clamping force and moves relative to the base (38). A second mode uses a double clamping technique where first the rear is clamped and the front moved forward then the front is clamped and the rear moved forward. All of these embodiments preferably use semiconductor materials, enabling formation of very thin layers and small devices.

MINIATURE LINEAR MOTION ACTUATOR

Field of the Invention

This invention relates generally to an improved miniature linear stepper actuator. More particularly, the present invention defines a miniaturizable linear motor which uses an expandable member clamped to a fixed member; the expandable member moving relative to the fixed member.

Background and Summary of the Invention

Medical applications often use surgical instruments that must fit within a physician's hand. When operated, the instrument must have constant motion and little backlash reaction. A linear actuator produces no rotary torque on startup, and a very small device which provides substantial force for doing work at multiple attitudes and positions and which allows for very accurate control would be well-received by the art.

One specific kind of linear actuator uses the shape change of piezoelectric materials that occurs when voltage is applied thereacross to generate linear motion. A "double clamping" type actuator operates by clamping a first end of the piezoelectric material, expanding the overall

AUSTRALIAN PATENT OFFICE

length of the material, clamping the other end of the piezoelectric material and releasing the first end of the material, and then reducing the size of the piezoelectric material. Each repetition of the above-described process causes one cycle of movement.

The Inchworms™ piezoelectric linear actuator manufactured by the Burleigh Corp. of Fishers New York is one example of a double clamping actuator. The Inchworms™ device includes three piezoelectric elements, two of which mechanically and orthogonally grip a shaft that axially extends through the motor. Even the smallest of these devices, however, is too large in diameter (about 0.5 inch) for many micro-device applications.

A different linear actuator, which uses only a single kind of clamping mode, is disclosed by Judy, Polla and Robbins in "A Linear Piezoelectric Stepper Motor With Sub-micrometer Step Size and Centimeter Travel Range", IEEE Transactions on Ultrasonics, Ferroelectrics, and Frequency Control, Vol. 37, No. 5, September 1990 ("Judy et al."). The piezoelectric element described therein measures 25.4 mm x 12.7 mm x 1.6 mm, while the overall size of the stepper is greater than 150 mm x 60 mm x 100mm. The principle of operation of the device is based on the expansion and contraction of a piezoelectric element mounted on a gliding structure.

The Judy et al. design was relatively large in size, difficult to assemble, and varied greatly in performance characteristics depending on its physical orientation -- the direction in which it was being held. The Judy et al. device used components made of bulk piezoelectric ceramics, metal and non-conducting insulators that made it difficult to reduce the overall size of the device. Brass glider electrodes electrostatically clamp a teflon insulating layer between the plates. The teflon has a thickness of about 63.5 μm. Judy's system operated by clamping the piezoelectric element during its expansion, so that it could not move relative to the base and hence pushed the load forward. During contraction, the clamping force was removed so that the piezoelectric element would move relative to the base.

Two types of double clamping linear motors are disclosed in Fujimoto in U.S. Patent No. 4,736,131 and Lang in U.S. Patent No. 4,709,183. In the '131 patent, two piezoelectric elements clamp on side walls perpendicular to the axis of motion through motion magnifying levers. The '183 patent also relies on the piezoelectric material to achieve mechanical clamping of the side wall to implement a double clamping linear motion. Sidewall clamping requires a high degree of manufacturing precision (orthogonal machining) and cost.

Linear motors that rely on vibratory phenomena employ several different strategies, including the use of piezoelectric elements to transfer vibrations to moving members. These types of devices are inefficient, expending substantial energy in generating motion off axis, or orthogonal, to the intended line of work. Linear, circular or elliptical motion is repetitively, frictionally transmitted to the moving members. A variety of driving methods have been used, including axial, torsional, and travelling wave vibration phenomena.

For example, Onishi's U.S. Patent Nos. 5,036,245 and 5,134,334 describes a device in which piezoelectric elements vibrate the legs of a "C" shaped structure such that the structure travels along a rail perpendicular to the legs.

Yamaguchi's U.S. Patent No. 5,140,215 discloses a device that transfers elliptical motion with one member exciting a longitudinal vibration in the length direction while another member excites a flexural vibration in the thickness direction. All of these devices in the prior art are unsuitable for the kind of miniaturization used according to the present invention.

Many of the problems outlined above are solved by the miniature linear motion actuator in accordance with the present invention. The linear motion actuator hereof provides for precise, controllable linear motion in a substantially miniaturized device.

According to the present invention there is provided a linear actuator comprising:

first and second wafer elements having first and second wafer surfaces in slidable, abuttable engagement;

a native oxide thin film electrically insulating layer formed on one of said first and second wafer surfaces between said first and second wafer surfaces and said first and second wafer elements, said insulating layer being between 50Å and 2μm in thickness;

means for selectively electrostatically clamping said first wafer surface relative to said second wafer surface; and

inertia generating means, operably coupled to said second wafer element, for moving

AUSTRALIAN PATENT OFFICE

said second wafer element relative to said first wafer element.

The invention also provides a device for producing linear motion of one member relative to another member, comprising:

a base member, formed of a semiconductor material and including a native oxide film insulating layer thereon of a thickness less than 2μm;

a glider, having a surface in contact with said insulating layer, said glider including a portion formed of a material which changes size when voltage is applied thereto; and

a control console, producing a first voltage which electrostatically clamps said glider to said base member, and producing a second voltage which expands said material and contracts said material in a way to move said glider relative to said base against a force produced by the electrostatic clamping.

The invention also provides a device for producing linear motion of one member relative to another member, comprising:

a base member, formed of a semiconductor material and including a native oxide film insulating layer thereon of a thickness less than 2μm;

a glider, having a surface in contact with said insulating layer, said glider including a portion formed of a material which changes size when voltage is applied thereto, said glider includes a clamp wafer member and an expandable member, and wherein said clamp wafer member is a two piece member including a distal portion and a proximal portion; and

a control console, producing a first voltage which electrostatically clamps said glider to said base member, and producing a second voltage which expands said material and contracts said material in a way to move said glider relative to said base, against a force produced by the electrostatic clamping and wherein said control console produces voltages which clamp said distal portion while moving said proximal portion and which clamp said proximal portion while moving said distal portion.

The invention also provides a device for producing linear motion of one member relative to another member, comprising:

a base member, formed of a semiconductor material and including a native oxide film insulating layer thereon of a thickness less than 2μm;

a glider, having a surface in contact with said insulating layer, said glider including

AUSTRALIAN PATENT OFFICE

a portion formed of a material which changes size when voltage is applied thereto;

a control console, producing a first voltage which electrostatically clamps said glider to said base member and producing a second voltage which expands said material and contracts said material in a way to move said glider relative to said base against a force produced by the electrostatic clamping; and

a plurality of lead wires connected to said glider portion, each of said lead wires including a rigid wire portion, a hollow member, within which said rigid wire portion is slidably received and a connection portion connecting said hollow member to said glider portion.

The invention also provides a miniature linear stepper motor for providing sub-micrometer inertial sliding motion in a hand held instrument having a generally tubular housing easily graspable between the thumb and forefinger of a user, comprising:

an inertial member received within said housing;

an expandable member received within said housing having a first end operably coupled to said inertial member and a second end;

actuating means for selectively changing the size of said expandable member at relatively rapid and less rapid rates;

a miniaturized electrostatic clamp received within said housing and operably coupled to said expandable member second end for holding said second end in place relative to said housing during said less rapid changes of size of said expandable member, and for releasing said second end during said rapid changes of size of said expandable member, said electrostatic clamp comprising

a glider base;

a clamp element operably, slidably carried by said glider base;

a native oxide dielectric layer interposed between said glider base and said clamp element, said dielectric layer having a thickness of not less than about 50Å and not more than about 3μm.

The invention also provides a miniature linear stepper motor for providing sub-micrometer inertial sliding motion in a hand held instrument having a generally tubular housing easily graspable between the thumb and forefinger of a user, comprising:

an inertial member received within said housing;

AUSTRALIAN PATENT OFFICE

an expandable member received within said housing having a first end operably coupled to said inertial member and a second end;

actuating means for selectively changing the size of said expandable member at relatively rapid and less rapid rates;

a miniaturized electrostatic clamp received within said housing and operably coupled to said expandable member second end for holding said second end in place relative to said housing during said less rapid changes of size of said expandable member, and for releasing said second end during said rapid changes of size of said expandable member, said electrostatic clamp comprising

a glider base;

a clamp element operably, slidably carried by said glider base;

a native oxide dielectric layer interposed between said glider base and said clamp element, said dielectric layer having a thickness of not less than about 50Å and not more than about 3μm.

The invention also provides a movement interface device for an electric motor, comprising:

a base member, formed with a power supply interface thereon and a movement interface surface;

a glider member, adapted to move relative to said base member, having an interface surface in contact with said movement interface surface of said base member, said glider member including an electric connection; and

an electronic interface, comprising a hollow portion connected to one of said members, said hollow portion defining an inside connection surface which is formed of an electrically conducting material, a rigid wire portion connected to the other of said members, said rigid wire portion having an outside surface which is electrically conductive, and which is received within said hollow portion, said outside surface thereby electrically contacting, said inside connection surface, and so that said rigid wire portion can slide within said hollow portion while still contacting the inside connection surface of said hollow portion, thereby allowing movement between said glider member and said base member while still allowing electrical contact therebetween.

AUSTRALIAN PATENT OFFICE

The invention also provides an apparatus for allowing relative movement of an electrical component, comprising:

a control element, producing an electrical voltage which will be used to drive a motor, said control element including electrical lead wires attached thereto;

a base member, having a sliding surface thereon and having an electrical connection;

a glider member, having a sliding surface thereon which is pressed against said sliding surface of said base member, said glider member also including an electrical connection;

an electrical interface, comprising a first element, connected to one of said electrical connections, having inside surfaces which are electrically connected to said one of said electrical connections, said inside surfaces defining an electrical connection surface;

a connection element, slidably connected to said electrical connection surface, and having an end portion which is located wholly within said inside surfaces of said electrical interface, and pressed thereagainst such that when said glider member slides relative to said base surface, said connection element moves within said inside surfaces but maintains electrical contact therewith.

Preferably, the linear motion actuator has a voltage supply, first and second wafer elements presenting their respective first and second

AUSTRALIAN PATENT OFFICE

wafer surfaces in slidable, abuttable engagement, a clamping system for selectively holding the first and second wafer surfaces in relative position, an expandable member operably coupled to the first wafer element to effect motion of the first wafer relative to the second wafer, and an electronic control system, electrically connected to the voltage supply, the clamping means and the expandable member being adapted for controlling various characteristics of the motion. The electronic control system controls the amplitude, frequency and waveform shape of a voltage output to the clamping system and the expandable member whereby the expandable member effects a controlled, selective bi-directional, linear motion of the first wafer relative to the second wafer.

Preferably, semiconductor technology is combined with shape changeable materials such as piezoelectric materials to provide a miniaturized linear actuator. An electrostatically clamping semiconductor wafer and base semiconductor wafer, both having polished surfaces, are placed in slidable, abuttable engagement. Wire leads selectively provide an electrostatic clamping force between the wafers. A selectively expandable piezoelectric element is fixedly carried at a first end of the clamping wafer. The second end of the piezoelectric element is coupled to an inertial mass. An actuating voltage is selectively applied to the piezoelectric element while a clamping voltage is applied across the wafers, holding the clamping wafer in position relative to the base wafer. The actuating voltage is then rapidly changed and the piezoelectric element quickly changes its size in response to the changing voltage. The inertial mass inertially resists the quick piezoelectric element movement, overcoming the clamping force and moving the clamping wafer relative to the base wafer.

In one alternate technique, the polarity of the clamping voltage can be quickly switched at the time the voltage to the piezoelectric element is rapidly changed. This helps avoid charge build up, and avoids compression of the insulating layer. The cycle is repeated-to effect precise, incremental linear motion. The motion of the linear actuator can also be easily reversed.

AUSTRALIAN PATENT OFFICE

The voltage on the electrostatic clamp and the expandable member is controlled to provide appropriate frequency, amplitude and waveform shapes. Frequencies are adjustable and preferably the frequency of the voltage waveform applied to the electrostatic clamp is some factor less than the voltage frequency applied to the expandable member. Voltage amplitude is adjustable to provide control of actuator output force. The waveform shape of the voltage applied to the clamp and the voltage applied to the expandable member is controllable to control actuator output force. An additional phase angle difference control provides control over the phase angle difference between the clamp voltage waveform and the expandable member voltage waveform.

A double clamping embodiment of the actuator is provided that uses semiconductor technology to provide a double clamping linear actuator that has usable force levels and repeatable increments regardless of the spatial orientation of the actuator.

Brief Description of the Drawings

These and other aspects of the invention will now be described in detail with reference to the accompanying drawings, wherein:

Figure 1 is an enlarged, fragmentary, sectional view of a miniature linear motion actuator in accordance with the present invention, depicted within a support casing;

Figure 1A is a sectional view of the layers forming the moving parts of the first embodiment.

Figure 2 is a fragmentary view of a sliding electrical contact wire;

Figure 3 is a sectional view taken along the line 3-3 of Figure 1;

Figure 4 is a fragmentary, detail view depicting a second embodiment of the invention which uses double clamping;

Figure 5 is a simplified diagram depicting the control console and electrical connection to the elements of the miniature linear motion actuator in accordance with the present invention;

Figure 6 is a block diagram of the control system of the linear actuator;

Figure 7 is an electronic circuit diagram of an exemplary control circuit used according to the present invention;

Figure 8 is a graph depicting output force of an exemplary actuator as a function of clamping voltage and expandable member voltage;

Figure 9 is a graph depicting the velocity of the linear actuator as a function of the clamping voltage and output force;

Figure 10 is a timing diagram for the first embodiment;

Figure 11 is a timing diagram for the second embodiment;

Figure 12 is a graph depicting the velocity of the single clamping embodiment of the actuator as a function of clamping voltage for a variety of load sizes;

Figure 13 is a graph depicting the force generated by the single clamping embodiment to the actuator as a function of clamping voltage for a variety of clamping frequencies;

Figure 14 is a graph depicting the force generated by the single clamping embodiment of the actuator as a function of expandable member voltage for a variety of clamping voltages, with the phase between the clamping voltage and expandable member voltage as depicted in Figure 10;

Figure 15 is a graph depicting the velocity of the single clamping embodiment of the actuator as a function of external load for a variety of clamping voltages;

Figure 16 is a graph depicting an estimate of glider velocity of the single clamping embodiment of the actuator as a function of load force for a variety of glider weights;

Figure 17 is a graph depicting the force generated by the single clamping embodiment of the actuator as a function of glider mass; and

Figure 18 is as graph depicting the force generated by the single clamping embodiment of the actuator as a function of phase control variation of expandable member and clamp waveforms.

AUSTRALIAN PATENT OFFICE

Description of the Preferred Embodiments

A presently preferred embodiment will now be described in detail with reference to the accompanying drawings.

Figure 1 shows a miniature linear actuator in accordance with a first embodiment of the present invention. The structure of the first embodiment has a base and a glider which are continuously clamped to one another, and wherein movement is effected by selectively overcoming the clamping force. The actuator is formed of a base 22, attached to the casing C, and a glider 24 which moves relative to the base, to provide force to a mass load 26.

The power for the operation is supplied over a plurality of wires 40, 76, 78, and 80 supplied as a control wire trunk 28. These wires are configured in a way that retains separation of the wires as the glider moves, to prevent electrical short circuits between the wires. Portions of these wires may be insulated to prevent any unintended short circuits. A more preferable technique is to use rigid wires as described herein.

The casing fog the device is shown generally in Figure 1 with the reference designation C, and refers to a part of the device which remains fixed and immobile. The casing is preferably cylindrical, and includes a plug 32 held in the cylinder. The base 22 includes support element 30 and wafer base 34 which is attached to support element 30 by epoxy or the like. A detailed drawing of the layers forming the actuator is found in Fig. 1A. Support element 30 is connected to the plug at a first end 31, and cantilevered therefrom at its other end. This connection of the support element 30 to the plug 32 prevents movement of the base in a direction parallel to the axial direction of the cylindrical casing. A top surface of the support element 30 is polished to have a surface height asperity of less than 1μm/5mm of linear length, and has an insulation layer 36 thereon to insulate between the support element 30 and the overlying wafer base 34. Insulation layer 36 is most preferably a native oxide.

The wafer base 34 is formed of silicon with an upper polished surface 38. Surface 38 is covered by an insulating layer 39 which is preferably a native oxide layer of SiO_2. Another layer of silicon nitride, Si_3N_4, layer 41, is preferably, but not necessarily, grown over native oxide layer 39. The Si_3N_4 layer helps stabilize the native oxide layer 39 and also physically strengthens the layer.

The resultant insulation layers 39, 41 are very smooth since they have been formed on the highly polished surface 38.

Any technique which is known in the semiconductor art can be used for forming the SiO_2/Si_3N_4 layers over the wafer base 34. The most preferred technique is to heat the surface of the silicon element in the presence of oxygen to form the native oxide layer thereon. This has the added advantage that the connection strength between the silicon and the insulation is very high. Less preferred techniques include sputtering and chemical vapor deposition of the oxide.

Wafer base 34 receives a potential through a wire 40 which is electrically connected therewith.

Glider 24 includes clamping wafer 46 and expandable member 48. The clamping wafer 46 is also preferably formed of silicon with a lower polished surface 44. An alternate embodiment of this invention forms the insulating layers 39, 41 on the polished surface 44 of the clamping wafer 46, instead of on the wafer base 38.

An insulating layer 52 is formed on the opposite surface of the clamping wafer 46, opposite the polished layer 44. Expandable member 48 is attached to insulating layer 52. A portion 49 of expandable member 48 is cantilevered with respect to the underlying support elements. Expandable member 48 is formed of a material which changes in size responsive to application of a stimulus thereto. More preferably, expandable member 48 expands and/or contracts in size based on an electric field applied thereto. The material which is currently preferred is a piezoelectric material, such as PZT. Another preferred material is the PZT material known as LTZ-2M, available from Transducer Products in Connecticut. Other materials could

also be used, including a shape memory material such as nitinol, an electrostrictive material such as PLZT, or a magneto-restrictive element that changes its dimension in response to an appropriate magnetic field. Any material can be used, so long as it allows the expandable member 48 to increase and decrease in size relatively rapidly responsive to the application of a stimulus field.

The expandable member 48 is glued to the insulating layer 52 which overlies clamping wafer 46 by an epoxy adhesive. Electric lead wires 54 and 56 provide an electrical potential across the expandable member 48 to control its expansion and contraction.

Mass load 26 represents schematically the device which receives the output force produced by the movement of the glider relative to the wafer base. Mass load 26 includes a work interface rod 64 which is connected to the device which is intended to receive the payload. The expandable member 48 is preferably attached to mass load 26 by an insulating bonding adhesive 60, such as epoxy. The movement of the glider assembly 24 is thereby translated into linear motion of the mass load 26. The mass load 26 is preferably of a shape to contact the interior surfaces of the cylindrical casing C and thereby maintain a seal within the cylinder. Workbase seal 66 seals between mass load 26 and casing C in order to prevent liquid leakage into the motor. Seal 66 can be an annular truncated cone, or an "O"ring seal.

In order to allow more sensitive control of the present invention, a sensor 300 may be placed in contact with the mass load. Sensor 300 could be a force sensor, accelerometer, or the like. The sensor can be wireless or wire-connected, and is used to provide feedback as described herein.

Force levels encountered at the distal tip are directly transmitted back to expanding member 48 and the interface between clamping wafer 46 of the glider 24 and base wafer 34. Controller 120 may directly sense any load changes on work interface 64 from a workpiece through monitoring voltage, current and phase angle changes. Controller 120 can be programmed to automatically respond to these changes through feedback mechanisms to adjust one or more settings to adjust

AUSTRALIAN PATENT OFFICE

the glider waveform control 128, voltage amplitude 130, frequency control 132, expandable member waveform control 134, expandable member voltage control 136, expandable member frequency control 138, and phase control 126 as described. Thus, a specific force displacement relationship can be maintained within the power and mechanical limits of the system. It is also anticipated that other sensors may be added to the system to assist in feedback control of the present invention.

In operation, the device operates to produce motion as follows. It should be understood that while the explanation given herein is an explanation of forward motor motion, the opposite sense operation produces a reverse movement of the motor.

A first step of the operation provides a clamping force by applying an electrical force between clamping wafer 46 and wafer base 34. This clamping force is carefully controlled as explained herein such that it holds the position clamping member relative to the wafer base under most circumstances, including slow expansion of expandable member 48. The force is not so strong a force as to prevent separation between the clamping wafer 46 and wafer base when sufficient inertial force is applied thereto from maximum-speed contraction of expandable member 48. The clamping force is important since the clamping force must be sufficient to hold the connection between the wafers while pushing forward the mass load.

The clamping force is one of the important features of this motor. It is well known from physics that an electrostatic clamping force is expressed as follows:

$$F_{clamp} = \frac{\varepsilon A V^2}{x2} \quad \ldots (1)$$

where ε is the dielectric constant of the insulating material, A is the surface area of the wafers, V is the voltage applied between the two wafers, and x is the separation between the two wafers. The separation between the wafers, of course is the thickness of the insulating layer 39, 41. Equation (1), therefore, shows that the clamping force is inversely proportional to the square of the

AUSTRALIAN PATENT OFFICE

thickness of the insulating layer that separates the base from the glider. As this thickness increases, the area of the clamping layers must increase proportionally as the square of this thickness. It can therefore be seen that a thicker insulation layer between the wafer base and the glider will necessitate that the wafer base and the glider be much larger in area to provide a comparable force.

The Judy et al. design used a teflon sleeve between the layers. This teflon sleeve was about 63.5μm in thickness. In order to obtain sufficient clamping force between the base and glider, therefore, the surface areas of these two elements needed to be relatively large in comparison to the present invention.

In contrast, the present invention teaches using semiconductor materials, which allow the use of very thin insulating layers, e.g. 50Å-2μm in thickness. Silicon and other such materials can be very accurately processed using conventional semiconductor miniaturization techniques. This processing allows very thin insulating layers with a high degree of polish. While the insulating layers can be as thin as 50Å, the preferred thickness for the insulating layer 42, according to the present invention, is lμm in thickness. This is almost two orders of magnitude thinner than the Judy et al. insulating layer, and therefore allows the resultant structure to be four orders of magnitude smaller (since the area is not a squared term, but the distance is) for a similar clamping force.

This reduced size for the same clamping force allows increased miniaturization.

Returning to operation, then, once the glider is clamped to the base with an appropriate amount of clamping force, the expandable member 48 is increased in length slowly, e.g., gradually over 1 ms. This increase in length pushes mass load 26 in the direction of the length increase. This slow increase does not overcome the clamping force between the glider and the base. The overall result is that the mass load is pushed forward by an amount proportional to the amount of expansion possible of the expandable member.

At this point, the voltage across the expandable member is quickly reduced, e.g. in 200-500 ns, to cause the expandable member to decrease in size in its minimum possible time. Inertial force from the fast contraction produces sufficient force between the glider and the wafer base to overcome the clamping force, and causes the glider to lift off from the wafer base. This overcomes the clamping force and moves the glider forward on the wafer base. The clamping force amount is explained in more detail herein, but it should be seen that the clamping force must set sufficiently high so that when the expandable member is increased in length slowly, the clamping force is sufficient to resist this force and maintain the position of the glider relative to the wafer. However, the clamping force is not sufficiently high that it will resist the inertia caused when the expandable member decreases in size at its maximum rate. This high inertia overcomes the clamping force and causes the glider 24 to move relative to the wafer base 34 against the force caused by the clamping. This completes the cycle of operation, and the next cycle is then initiated to move the mass load 26 further forward.

As can therefore be seen from the above, the present invention, by using semiconductor wafer materials and technology, allows the clamping wafers to be more closely spaced than was possible in the prior art. This increases the output force and velocity for a similarly sized device, and allows the device to be much smaller. In fact, the device of the present invention could be $63^2 = 3969$ times smaller than the Judy et al. device for similar force characteristics.

Another advantage of the present invention is obtained from the different mode of operation used according to the present invention. Judy et al. described that, during every cycle, the electrostatic clamp was turned off during the time when the glider was to be moved relative to the wafer base. However, during the time the clamp is turned off, the effects of gravity may affect the position of the glider relative to the base. This means that the device would operate differently depending on the position it was being held.

AUSTRALIAN PATENT OFFICE

In contrast, the techniques of the present invention maintain the clamp force at all times. The present invention does not turn off the clamp, but instead sets the clamping force at an appropriate value that can be maintained constant. In a first mode of this first embodiment of the invention, the clamp voltage is maintained at a constant value. In a second mode of this embodiment, described in more detail below, the clamping voltage varies cyclically. This cyclic variation removes accumulated charge in the substrate.

Any semiconductor material, as well as many metals could be used for the clamping wafers. Crystalline silicon is the preferred material, however, since it is readily available, strong, easily able to form a native insulative layer of SiO_2 thereon and also easily processed using conventional semiconductor techniques. Amorphous or polycrystalline silicon could also be used. Germanium and gallium arsenide are also good materials, but are more brittle. They are usable, but less preferred. Also usable, but even less preferred, include silicon carbide, gallium nitride, and gallium phosphide. Metals also can be used, for example aluminum, but its native oxide is not reliable. A stainless steel thin film can be used, but the thin layer of oxide would need to be sputtered thereon. This forms a more granular surface. Copper, brass and gold could also be used.

The preferred process of making the device, therefore, includes obtaining a silicon wafer, polishing the surface to obtain a flat surface, growing the oxide by heating the surface in the presence of oxygen, and then forming the Si_3N_4 on the SiO_2 by a conventional chemical vapor deposition technique.

Figure 2 shows a detailed connection diagram of each of the wires 76, 78, 80 and their accompanying cylinders 70, 72, 74. Each of the wires 76, 78 and 80 are formed of a rigid rod, connected at one end through the control wire trunk 28, and having a fixed length. Each wire, e.g., 76, is of a length such that it will remain within its associated cylinder 70 at all possible glider positions. Each of the cylinders is connected by a lead wire, e.g., 50, to its connected location. Each of the wires 76, 78, 80 from the control wire

AUSTRALIAN PATENT OFFICE

trunk 28 are slightly smaller in outer diameter than the inner diameter of the cylinder, but include a kink 82 therein at which point they contact the inside of the cylinder. Therefore, the wires 76, 78, 80 contact the inside of their associated cylinder 70, 72, 74, and form a sliding connection as the expandable members move relative to one another. The wires slide relative to the cylinder during this time. The cylinder itself, however, does not move, and the connection 50 does not move.

Figure 3 shows a cross-sectional view along the line 3-3 in Figure 1 showing the positions of the cylinders 70, 72 and 74 and their connections to the layers. Figure 4 shows a second embodiment of the present invention which is a linear actuator using a more conventional double-clamping technique. The Figure 4 embodiment shows only a portion of the overall device, that portion being the part which differs from the portion of Figure 1.

Figure 4 includes a similar support member 30 and wafer base 34 with insulating layer 44 thereon.

The glider 84 of the Figure 4 embodiment is totally different than the glider of the first embodiment. Glider 84 includes two separated-pieces, including a proximal glider 86 and a distaL glider 88. Each of the glider pieces include a respective lead wire, 90, 96 attached thereto. Each of the gliders also includes a bottom-most polished surface. The proximal glider 86 includes polished surface 92 and the distal glider includes polished surface 98. Each of these polished surfaces abuts against the insulating layer 41 on the wafer base, it being understood that the insulator could be similar to the insulator of Figure 1, 1A and alternately could be formed on the bottom surface of the glider.

The operation of the system of Figure 4 is somewhat different than the operation of the single clamping motor of Figure 1. Figure 4 uses a double clamping technique, whereby different glider portions are repetitively clamped, followed by expansion or contraction of the expandable element 48 to move it forward. The device can be moved in the direction to the right of Figure 4 in the following way. First, the proximal glider 86 is clamped with the expandable member 48 in its maximally contracted position. The distal

AUSTRALIAN PATENT OFFICE

glider 88 is not clamped at this time. The expandable member 48 is then expanded to its maximum expansion state, thereby pushing the mass load 26 to the right of Figure 4 At this time, the distal glider 88 is clamped, and the proximal glider 86 is released. The expandable member 48 is then returned to its contracted length to pull the proximal glider to the right in Figure 4. At this time the proximal glider 86 is again clamped, and the cycle begins anew.

The Figure 4 embodiment is highly miniaturizable due to the semiconductor materials that are used.

The movement of both embodiments of the invention are controlled by various parameters including voltage for clamping, voltage across the piezoelectric expandable elements, frequency of the repetitive voltage, and voltage waveform shape, i.e., change of voltage with respect to time.

Figure 5 shows the power control console 120 which controls the operation of these input parameters. Power control console 120 controls all voltages, frequencies and phases of the various elements.

The magnitude of the clamping voltage is adjusted to control the actuator operation according to desired characteristics. As explained above, the force between the base and glider is proportional to the amount of voltage used for clamping. Hence, the clamping voltage sets the base level of force holding together the glider and the base. When the expandable member expands, and pushes against the mass load, that mass load will only move forward if the force produced by pushing against the load does not overcome the clamping voltage between the glider and the base. Therefore, a clamping voltage must be set keeping in mind the load; too small a clamping voltage will not produce sufficient force to drive a specified load.

On the other hand, the clamping voltage must be overcome by the inertia of the expandable member contracting quickly. Too high a clamping voltage prevents the expandable member from snapping back sufficiently, and therefore shortens the step length.

As described above, the expandable member is repetitively expanded and contracted. The frequency of this expansion and contraction is

AUSTRALIAN PATENT OFFICE

based on physical characteristics of the system. The expandable member, for example, takes a certain amount of time to expand and to contract. In the embodiment described above, the expansion is done relatively slowly, e.g. 1 ms. The contraction occurs at the maximum possible speed of the material, but this also takes a certain finite amount of time, e.g. 250ns. The frequency of the repetitive operation cannot be faster than the time which is physically necessary for these materials to expand and contract.

It has also been determined by the inventors that the phase between the voltage waveform of the expandable member and the voltage waveform of the clamping member effects the amount of force that can be supplied by the device. An experimental plot of this information is shown in Figure 18. It should be seen that usually the phase should be around zero, but some small adjustments may improve certain characteristics.

Figure 5 shows the control console including a glider control unit 122, expandable member control unit 124, and a relative phase control unit 126. The glider base control unit 122 includes rotatable potentiometer knobs shown schematically as waveform control 128, amplitude control 130, and frequency control 132. These potentiometers correspond to those in Figure 7 described herein, and it should be understood that control circuit 120 may have more knobs than those shown.

The glider waveform control 128 generally controls the shape of the glider waveform. The voltage amplitude control 130 controls the amount of voltage between the wafer 46 and wafer base 34 to change the amount of electrostatic attraction. Because of the characteristics of the materials, a linear change in voltage amplitude may cause non-linear effects. The voltage amplitude control knob can be weighted, e.g., logarithmically, to compensate for those effects. Frequency control 132 controls the repetitive rate at which the waveforms are produced. For the preferred mode, this frequency is kept between around 10Hz and 1000Hz.

The expandable member control unit 124 similarly comprises an expandable member waveform control 134 which controls the characteristics of the waveform applied to the expandable member. For the first

embodiment, this waveform should be a slowly rising, but quickly falling waveform. For the second embodiment, the waveform could have any desired characteristics. Adjustable voltage amplitude control 136 controls the amplitude of the voltages used for clamping. The adjustable frequency control 138 changes the frequency of this voltage.

Phase control unit 126 controls the timing between the clamp voltage and the expansion voltage. The preferred timing characteristics are described herein.

A block diagram of the circuit within the control console of Figure 5 is shown in Figure 6. Frequency generator 204 produces the frequencies which will be used to drive the linear actuator. These frequencies are adjustable over a certain range. The output of frequency generator 204 is received by phase control unit 206 which produces two outputs, separated in phase by a selectable time. One of the outputs drives the piezo waveform generator 218, and the other output is divided to drive the clamp waveform generator 216. It should be noted that while the preferred embodiment of the invention provides a clamp waveform, it is also contemplated, but less preferred, to drive the motor using a constant clamp voltage. Direction control 212 controls the direction in which the motor is running, and is connected to the piezo wave generator 218, and to the clamp voltage actuator 214 which actuates clamp waveform generator 216.

Clamp voltage device 210 produces the clamping voltage that will be used to clamp the glider to the base. According to a preferred embodiment of the invention, the output of force sensor 300 is used to address the magnitude of this voltage in order to produce a desired amount of force.

As explained above, expandable member 48 expands or contracts as controlled by control console 120. Three separate controllable parameters, expandable member waveform control 134, voltage control 136 and frequency control 138, affect expansion and contraction of expandable member 48. Voltage control 136 generally controls the magnitude of change of length of expandable member 48. Frequency control 138 controls the periodic motion

of expandable member 48. Expandable member waveform control generally controls the inertial properties of expandable member 48 and its attached mass load 26.

A specific embodiment of an electrical control circuit for providing control over the parameters discussed above for the first embodiment is depicted in Figure 7 as control circuit 200. The circuit depicted in Figure 7 can be wholly or partially fabricated in one of the silicon wafer(s) carried within the linear actuator of the present invention, preferably in the base 30 at area 500, using conventional semiconductor techniques.

DC power supply 202 includes high voltage DC source 220 for energizing and expanding the piezoelectric element and a lower voltage source 222 for driving the logic e.g. at 12V. Voltage source 220 may be variable by the operator and/or by feedback from sensor 300 for achieving the optimal power from the linear actuator. The output value from voltage source 220 may range between 15 and 1000 volts, with the preferred voltage being around 500V.

The frequency generator 204 in Figure 7 produces a frequency which is used to produce the wafer driving waveforms. Frequency generator circuit 204 includes an internal frequency oscillator 224, and an external input port 226. The internal oscillator 224 uses an operational amplifier oscillator to produce a frequency based on the magnitude of the feedback resistance in the operational amplifier 236. Frequency selector switch 230 controllably switches feedback resistors 232, to form an RC network between those feedback resistors 232 and the capacitor 234. The system oscillates at a frequency dependant on the RC time constant, and hence produces a frequency based on the position of switch 230. Bias resistors 238, 240 and 242 provide a bias voltage to the inverting input of the operational amplifier.

The frequency generator circuit 224 could alternately be a variable divider attached to the output of a crystal, or could be a programmable frequency divider integrated circuit.

In this embodiment, an external frequency can also be added through terminal 226. Operational amplifier 244 compares the input

frequency with a DC bias from adjustable resistor 246 to adjust its amplitude to match the characteristics of the system.

The frequencies from external input 226 and from internal frequency oscillator 224 are input to two contacts of switch 228. The output of the switch 228 is passed to the phase shift control unit 206.

Phase shift control unit 206 provides two output frequencies, selected such that the phase lag between those output frequencies has a desired characteristic between 0 and approximate 0.1 μs. The phase control circuit 250 and phase control circuit 252 each have separately-adjustable delay characteristics. Circuit 250 includes fixed resistor 254 and variable resistor 256 as well as a capacitor 258. The combination of these resistances and capacitances form an RC circuit which delays the rise of the waveform. The RC time constant can be varied by varying the value of resistor 256. This delays the passage of the waveform and hence changes the phase angle thereof. Similarly, adjustment of resistor 266 delays the passage of the waveform to the output.

A switch 276 controls whether or not the phase shifting will be used. In a first position, the switch 276 directly connects the inputs of the phase shift unit to the outputs, thereby preventing any phase shift. In the second position, the phase shifts are controllable.

The signal output from circuit 250, either phase-shifted or directly connected, is coupled to frequency divider 208. Divider 208 is simply a D-type flip-flop with its Q not output connected to its D input to thereby divide the input frequency by 2. The output is coupled through a variable resistor. The output voltage is supplied to the clamp waveform generator 216. Of course, this could also be a programmable divide by N counter or any other divider known in the art.

The voltage for the electrostatic clamping of the base to the glider is produced by clamp voltage generator 210. Generator 210 includes a voltage divider 290, 292, 294, connected to the inverting input of an operational amplifier 288. The output of the operational amplifier 288 drives the gate of a power MOSFET 286 which has a grounded drain, and a source

AUSTRALIAN PATENT OFFICE

connected to the output with a bias resistor 285. The source is also directed through a feedback loop with sensor 300 and resistance 302 to the non-inverting input of the operational amplifier. It will be appreciated that operational amplifier 288 is connected as a comparator, and the output thereof determines the voltage drop across the MOSFET 286.

The source of the MOSFET 286 is connected to a filtering capacitor 298 whose output produces the voltage at output terminal 296. This output voltage 296 becomes the clamping voltage.

Element 212 is a motor direction control. By closing one of the two switches, the motor can be selectively reversed in direction. The switches selectively operate the clamp voltage activator 214, which includes comparator amplifiers 308 and 310. Each comparator 308, 310 has its negative input connected to a variable voltage from voltage divider 312. Depending on the positions of the switches 304 and 306, output voltages from the amplifiers 308, 310 are connected to the inverting inputs of operational amplifiers 316, 318 within the clamp waveform generator 216. The positive inputs of these operational amplifiers receive the output voltage from divide by two circuit 208. Each of the amplifier circuits in the clamp waveform generator have a similar construction. Operational amplifier 316 has an output which drives the base of MOSFET 320 which is configured as a follower. The source of this transistor 320 is connected through a variable resistor to the gate of another MOSFET 322, also configured as a follower. The source of the follower-configured MOSFET 322 has an output terminal 346.

Similarly, the circuit including op-amp 318 produces an output voltage at terminal 348. The output terminals 346 and 348 are respectively connected to the glider 46 and wafer base 34. It should be appreciated that by changing the positions of the switches 306, 308, the voltage between those values is also changed to thereby change the direction of operation of the motor.

The other output of the phase control unit, from variable resistor 278, is coupled to the input of piezoelectric element waveform generator 218. This second phase control element is connected to inverting

inputs of operational amplifiers 352, 354. The non-inverting inputs of both of these operational amplifiers receive respective signals from the switches 304, 306. The operational amplifiers, configured as comparators, electrically control the gates of MOSFETS 364, 366. These MOSFETS are connected as followers, with the source of each MOSFET connected through a variable resistor 372, 374 and a resistor to ground, 380, 382, to a power MOSFET 376 also connected as a follower. The sources of MOSFETS 376 and 378 produce voltages which are coupled to output terminals 388, 392. These terminals are connected to the electrical leads 54, 56 and thereby control the expansion and contraction of expandable member 48.

In operation, the circuit of Figure 7 produces voltage waveforms for the electrostatic clamp(s) and the expandable element. When switch 304 is closed, the respective amplifiers 352 and 308 are turned on thereby applying a specific voltage to amplifiers 316 and 318. These voltages are applied to operational amplifiers 316, 318 in clamp waveform generator 216. The other inputs of the operational amplifiers are driven by the output of the divide by 2 divider 208. This results in a continuously-reversing voltage across the output terminals 346, 348 at half the frequency of driving of the expandable member. The actual shape of the voltage curve depends on the RC time constant controlled by using variable resistors 328, 330. Closure of switch 306 turns on the opposite-sense voltage drivers.

Switches 304 and 306 also control the operation of the piezoelement waveform generator 218. When both switches 304 and 306 are open, waveform generator 218 is idle. Closing switch 304 also provides a low level voltage to the positive input of operational amplifier 352, thereby turning it on and allowing it to pass the output voltage received from the phase control 206. Alternately, switch 306 turns on the amplifier 354, thereby allowing it to operate using that same voltage. It can be seen that the overall effect of closing switches 304, 306 is to control the direction of motion of the linear actuator. By just closing switch 304, the waveform generator circuit that powers MOSFET 376 is initiated. By closing switch 306, the waveform across terminals 388 and 392 is inverted.

As described above, velocity of the actuator is controlled by changing the frequency output signal from frequency generator 204. However, for any given input power, the velocity output must be traded off against work load. The expandable member voltage most directly controls the power. The clamp voltage controls the tradeoff between speed and force. A low clamp voltage allows a higher speed but less force. Since the clamp voltage is lower, the clamping force between the glider and the base can be maintained only for a lower amount of force. However, since the clamping force is relatively lower, the inertial snapback operation allows the glider to move forward a little further.

The relationship between velocity and force is more complicated and less linear. The characteristics are more easily modelled, which has been done by the inventors and will be explained with reference to the following preferred embodiment.

The linear actuator of the present invention uses a piezoelectric element which is preferably 38.1mm in length. The preferred piezoelement width is 6.35mm. This provides a preferred clamp surface area of 234 square millimeters. The preferred thickness is 0.8mm. More generally, however, the actuator can be between 1 and 250mm in length, between 0.1 and 50mm in width, and 0.01 to 5mm in thickness.

The preferred piezoelement has a mass of 1.4 grams, although it can range between 0.01 and 450 grams. The preferred glider mass is 30 grams, although it is conceivable to make the glider mass between 1 gram and 10 kilograms.

The insulating layers 39, 41 are preferably formed of SiO_2 and Si_3N_4 as shown in Figure 1A. Preferably, the SiO_2 layer has a thickness of about 0.75μm and the Si_3N_4 layer about 0.15μm. Both layers could be as thick as 2-3μm or as thin as 50Å.

The silicon clamping wafer preferably has a thickness of 0.036mm, but more generally between 0.01 and 1mm.

AUSTRALIAN PATENT OFFICE

The system operates according to the following preferred parameters:

PARAMETER	PREFERRED	MINIMUM	MAXIMUM
Electrostatic Clamp Voltage	300 volts	30 volts	2000 volts
Piezoelectric Drive Voltage	500 volts	15 volts	1000 volts
Drive Frequency	400 Hz	0.1 Hz	3000 Hz
Silicon Clamping Wafer Resistivity	1 ohm-cm	0.001 ohm-cm	100 ohm-cm
Incremental Step Size	6.25 µm	0.01µm	50µm
Velocity	0.25 cm/s	0 cm/s	2 cm/s
Electrostatic clamping force	10 Newtons	0 Newtons	500 Newtons
Output Force	6 Newtons	0 Newtons	100 Newtons

It should be apparent from the above that the performance characteristics of the linear actuator are dependent on the physical properties of the system. Figures 8 and 9 show general performance envelopes for a linear actuator, it being understood that the absolute values of the curves could depend on the actual loads and inertial masses chosen in the clamp surface areas. The point of Figures 8 and 9 is that for each mass range and clamp area, a different set of curves define the performance envelopes, and values on these curves can be chosen to optimize different characteristics.

By specifying different values for any given application, usually the largest inertial mass and clamp surface area will be selected. Figure 8 shows the output force reaching its optimum value at point 146. An increase in clamp voltage initially produces a higher output force because it causes the glider wafer to be more tightly held in place as the expandable member is expanded. Too much clamping voltage, however, lowers the output force, because it prevents the expandable member from moving forward when the expandable member voltage is released. The clamp surface area and voltage are related to one another, and as the clamp surface is increased, the voltage necessary to produce the same amount of clamping force decreases.

Figure 9 shows a similar relationship between the force and clamping voltage. A peak velocity can be selected by adjusting the clamp voltage. However, when the clamp voltage becomes too high, the velocity begins to drop because of the increased difficulty in overcoming the clamping force to move forward. The output force also increases with increased voltage.

The step length is a function of the elastic limit of the expandable material and of the voltage applied to the expandable material.

As can be seen from the drawings of Figure 9, optimum force and velocity can be separately set, and the values may need to be set at different values to achieve different results.

Figure 10 shows a typical set of waveforms generated by the control console 120 for control of the actuator of the preferred mode of the first embodiment of the present invention. For purposes of this time chart, we assume that the expandable member 48 is oriented such that when the voltage on electrical lead 54 is positive, member 48 is expanded in length.

Voltage 148 represents the voltage applied to the wafer base, and voltage 150 represents the voltage on the glider. The voltage difference between voltages 148 and 150 represents the clamping voltage. According to one mode of the present invention, the clamping voltage is simply kept at a constant value at all times. This produces satisfactory results, but is less preferred than the technique described herein.

It was found by the present inventors that, when a constant clamping voltage was maintained at all times, a buildup of charge occurred across the elements, causing increased attraction between the wafers, resulting in a decrease of the separation distance between the glider 24 and base 22. According to the preferred mode of the present invention, the voltage across the glider and base is maintained for a relatively short time, e.g., 1-4ms. At the end of that 1-4 ms time, the voltage across the glider/base is reversed in polarity. This causes a momentary time during which the voltage across the glider base approaches zero. At this time, the glider and base separate slightly,

AUSTRALIAN PATENT OFFICE

followed by an increased attraction. This increased attraction, however, has opposite sense charge layer characteristics so that charge buildup is avoided.

Turning then to the time chart, prior to point 170, the time chart shows that the voltage between the glider and the base is negative: that is, the voltage on the glider is less than the voltage on the base. At time point 170, the voltage across the electrical leads are reversed. This momentarily loosens the electrostatic clamping force between the clamping wafer 46 and the wafer base 34, but essentially immediately re-tightens the clamping force. At this point, the voltage 154, which is the voltage controlling the expansion of the electrostatic element, is dropped to zero as quickly as possible. This causes a quick contraction of the expandable member within hundreds of nanoseconds. As described above, the quick contraction causes the glider to overcome the clamping force and move slightly forward.

At time point 172, voltage 154 begins slowly increasing. This causes a slow increase in the length of the expandable member 48. This slow increase pushes forward the mass load rather than overcoming the clamping force. When the expandable member 48 is completely expanded, at time 174, the voltage across member 48 drops to zero again, thereby repeating the previous step causing a further forward movement.

By repeating these steps, the system has a continuously-intermittent forward motion. Backward motion is carried out the opposite of the forward motion as shown on the negative sense line 155, at time 176 etc.

The waveforms for the second embodiment are slightly different and are shown in Figure 11. One cycle may be considered to begin at time point 180, when the voltage potential on the curve 166, which represents the potential on the electrical lead 90 driving the proximal glider 86, is dropped to zero. At the same time, the voltage on line 168, connected to the distal glider 88, rises. This allows the proximal glider 86 to slide freely relative to the wafer base, but clamps the distal glider 88 relative to the wafer base.

At this time, the voltage 154, which drives the expandable member 48 is reduced, so that the expandable member contracts in size. Since the distal glider has been clamped, the proximal glider 86 is moved to the

AUSTRALIAN PATENT OFFICE

right in Figure 4. After full contraction, at time 182, the voltages are reversed, with the distal glider being freed, and the proximal glider being clamped. The voltage across the expandable member 48 then increases, causing the distal glider to move to the right in Figure 4. Of course, opposite direction motion is carried out using precisely the opposite steps.

Figures 12-18 show the interrelationships between clamping voltage, expandable member voltage, voltage amplitude, waveform, frequency, phase angle difference and clamping force. Figures 12-18 show actual values for specific prototypes used according to the present invention.

Figure 12 shows the velocity of an element plotted as a function of electrostatic clamp voltage for various external loads. For each design, there is an optimum range where too little or too much clamp voltage produces inferior results. If the clamp voltage is too low, e.g., less than 50 volts as shown in Figure 13, then no movement may be possible at all.

Figure 13 shows the output force plotted as a function of electrostatic clamping voltage for various clamping cycle frequencies. The clamp voltage increase produces an output force which increases until it plateaus. Lower frequencies have less overall effect than the highest frequency tested. The control frequencies of the voltage inputs to the expandable member and the clamping wafer generally control the repetitive rate of actuator steps.

Figure 14 shows a plot between the voltage applied to the expandable member and the force produced for various clamping voltages. It should be seen that for the different clamping voltages, different expansion voltages for the piezo electric element are possible.

Figure 15 shows a relationship between the velocity and the mass of the external load for different clamp voltages.

Figure 16 shows a three dimensional plot between the velocity, the loading, and the force of the load.

Figure 17 shows the force as a function of glider mass data, showing that the output force increases linearly, at least over a specified range, with the glider mass.

AUSTRALIAN PATENT OFFICE

Figure 18 shows a plot of the force versus phase of the PZT clamps.

Figures 8, 9 and 12-18 show the large range of operating characteristics that are controllable by way of mathematical and experimental modeling which produce an application-specific design procedure. The actual use of a linear actuator constructed according to the present invention yields a required total displacement, a minimum step size, a maximum velocity, a volumetric size constraint and a maximum force. The design procedures include prediction of whether such a set of constraints can be satisfied and then guide the design of a complete linear actuator, according to the present invention for that task.

Another advantage of the present invention is the ability to control motion by either displacement, force or a combination of both. Traditional linear motors can only be driven by specifying displacements because there is high mechanical impedance between the motor and the workpiece, i.e., the load created by the workpiece at the distal end of the linear motor. For example, in the case of a rotary motor driving through a rotary-to-linear coupling, such as a worm and worm gear, even medium levels of force at the distal end are not transmitted back to the motor due to the mechanical advantage of the high gear ratio. This condition renders force control impassible without extra sensors added to the distal end to workpiece interface.

The present invention preferably uses sensor 300, which senses force or displacement and feeds back a signal indicative thereof. Alternately, however, controller 120 may directly sense any load changes on work interface 64 from a workpiece through monitoring voltage, current and phase angle changes. Controller 120 can be programmed to automatically respond to these changes through feedback mechanisms to adjust one or more settings for the following: glider waveform control 128, voltage amplitude control 130, adjustable frequency control 132, expandable member frequency control 138, and phase control 126. Thus, a specific force/displacement relationship can be maintained within the power and mechanical limits of the system.

The device of the present invention is capable of small precision steps in the range of 10-30 nanometers throughout the entire displacement range of the device which can be between 3.3cm and 12cm. The actual theoretical displacement is limited only by the length of the wafer base. However, according to another preferred modification of the present invention, glider 24 is connected to casing C by a spring which limits the length of movement of the glider relative to the base. This spring can preferably bias glider into a specific position; whereby when the clamping force is released between the glider and the base, the spring biases the combination back to a zero position.

The preferred device fits within a 3/8 inch tube, but still produces 1.2 foot pounds of force over its range.

Although only a few embodiments have been described in detail above, those having ordinary skill in the art will certainly understand that many modifications are possible in the preferred embodiment without departing from the teachings thereof.

For example, mechanical equivalents for the electrostatic clamps may be used. Mechanical biasing methods for increasing the friction at the glider wafer to base wafer interface would have the advantage of providing the performance achieved with continuous electrostatic clamping. In addition, the substitution of mechanical biasing methods could eliminate the additional electronic controlling required by the electrostatic clamps.

All such modifications are intended to be encompassed within the following claims.

Throughout this specification and the claims which follow, unless the context requires otherwise, the word "comprise", and variations such as "comprises" and "comprising", will be understood to imply the inclusion of a stated integer or step or group of integers or steps but not the exclusion of any other integer or step or group of integers or steps.

AUSTRALIAN PATENT OFFICE

THE CLAIMS DEFINING THE INVENTION ARE AS FOLLOWS:

1. A linear actuator comprising:

first and second wafer elements having first and second wafer surfaces in slidable, abuttable engagement;

a native oxide thin film electrically insulating layer formed on one of said first and second wafer surfaces between said first and second wafer surfaces and said first and second wafer elements, said insulating layer being between 50Å and 2μm in thickness;

means for selectively electrostatically clamping said first wafer surface relative to said second wafer surface; and

inertia generating means, operably coupled to said second wafer element, for moving said second wafer element relative to said first wafer element.

2. A device as in claim 1, said insulating layer comprises a thin film attached to said first wafer surface.

3. A device as in claim 1, wherein said insulating layer comprises a thin film attached to said second wafer surface.

4. A device as in claim 1, wherein said first wafer element is formed from silicon, and said insulating layer comprises a thin film of native SiO_2.

5. A device as in claim 1, wherein said first wafer element comprises a material selected from the group of materials consisting of: crystalline silicon, amorphous silicon, poly-crystalline silicon, germanium, gallium arsenide, silicon carbide, gallium nitride, gallium phosphide, aluminum, stainless steel, copper, brass and gold.

6. A device as in claim 1, said second wafer element comprises a material selected from the group of materials consisting of: crystalline silicon, amorphous silicon, poly-crystalline silicon, germanium, gallium arsenide, silicon carbide, gallium nitride, gallium phosphide, aluminum, stainless steel, copper, brass and gold.

AUSTRALIAN PATENT OFFICE

7. A device as in claim 1, wherein said inertia generating means comprises shape changing, means having a longitudinal axis configured to substantially change shape along an axis of motion of the device.

8. A device as in claim 7, wherein said shape changing means comprises a material selected from the group of materials consisting of a piezoelectric material, a shape memory material, an electrostrictive material and a magneto restrictive material.

9. A device as in claim 1, said first and second wafer surfaces have a surface height asperity of less than about 1 micron of surface height per 5 millimeters linear length.

10. A device as in claim 1 wherein said electrostatic clamping means is a voltage source.

11. A device as in claim 10 wherein said voltage source produces an alternating voltage which alternates between producing a positive and negative potential between said wafer elements.

12. A device for producing linear motion of one member relative to another member, comprising:

a base member, formed of a semiconductor material and including a native oxide film insulating layer thereon of a thickness less than 2μm;

a glider, having a surface in contact with said insulating layer, said glider including a portion formed of a material which changes size when voltage is applied thereto; and

a control console, producing a first voltage which electrostatically clamps said glider to said base member, and producing a second voltage which expands said material and contracts said material in a way to move said glider relative to said base against a force produced by the electrostatic clamping.

13. A device as in claim 12 wherein said second voltage includes a slow change of size of said portion followed by a fast change of size of said portion.

AUSTRALIAN PATENT OFFICE

14. A device as in claim 12 wherein said glider includes a clamp wafer member and an expandable member, and wherein said clamp wafer member is a single piece member which is clamped to said base during expansion and contraction of said material.

15. A device for producing linear motion of one member relative to another member, comprising:

a base member, formed of a semiconductor material and including a native oxide film insulating layer thereon of a thickness less than 2μm;

a glider, having a surface in contact with said insulating layer, said glider including a portion formed of a material which changes size when voltage is applied thereto, said glider includes a clamp wafer member and an expandable member, and wherein said clamp wafer member is a two piece member including a distal portion and a proximal portion; and

a control console, producing a first voltage which electrostatically clamps said glider to said base member, and producing a second voltage which expands said material and contracts said material in a way to move said glider relative to said base, against a force produced by the electrostatic clamping and wherein said control console produces voltages which clamp said distal portion while moving said proximal portion and which clamp said proximal portion while moving said distal portion.

16. A device for producing linear motion of one member relative to another member, comprising:

a base member, formed of a semiconductor material and including a native oxide film insulating layer thereon of a thickness less than 2μm;

a glider, having a surface in contact with said insulating layer, said glider including a portion formed of a material which changes size when voltage is applied thereto;

a control console, producing a first voltage which electrostatically clamps said glider to said base member and producing a second voltage which expands said material and contracts said material in a way to move said glider relative to said base against a force produced by the electrostatic clamping; and

a plurality of lead wires connected to said glider portion, each of said lead wires including a rigid wire portion, a hollow member, within which said rigid wire portion is

AUSTRALIAN PATENT OFFICE

slidably received and a connection portion connecting said hollow member to said glider portion.

17. A device as in claim 16 wherein said rigid wires and said hollow member are cylindrical.

18. A miniature linear stepper motor for providing sub-micrometer inertial sliding motion in a hand held instrument having a generally tubular housing easily graspable between the thumb and forefinger of a user, comprising:

an inertial member received within said housing;

an expandable member received within said housing having a first end operably coupled to said inertial member and a second end;

actuating means for selectively changing the size of said expandable member at relatively rapid and less rapid rates;

a miniaturized electrostatic clamp received within said housing and operably coupled to said expandable member second end for holding said second end in place relative to said housing during said less rapid changes of size of said expandable member, and for releasing said second end during said rapid changes of size of said expandable member, said electrostatic clamp comprising

a glider base;

a clamp element operably, slidably carried by said glider base;

a native oxide dielectric layer interposed between said glider base and said clamp element, said dielectric layer having a thickness of not less than about 50Å and not more than about 3μm.

19. A motor as in claim 18 wherein said glider base is formed of a semiconductor material.

20. A motor as in claim 18 wherein said semiconductor material is silicon and said native oxide layer is silicon dioxide.

AUSTRALIAN PATENT OFFICE

21. A miniature linear stepper motor for providing sub-micrometer inertial sliding motion in a hand held instrument having a generally tubular housing easily graspable between the thumb and forefinger of a user, comprising:

an inertial member received within said housing;

an expandable member received within said housing having a first end operably coupled to said inertial member and a second end;

actuating means for selectively changing the size of said expandable member at relatively rapid and less rapid rates;

a miniaturized electrostatic clamp received within said housing and operably coupled to said expandable member second end for holding said second end in place relative to said housing during said less rapid changes of size of said expandable member, and for releasing said second end during said rapid changes of size of said expandable member, said electrostatic clamp comprising

a glider base;

a clamp element operably, slidably carried by said glider base;

a native oxide dielectric layer interposed between said glider base and said clamp element, said dielectric layer having a thickness of not less than about 50Å and not more than about 3μm.

22. A motor as in claim 21 wherein said glider base is formed of a semiconductor material.

23. A motor as in claim 21 wherein said semiconductor material is silicon and said native oxide layer is silicon dioxide.

24. A movement interface device for an electric motor, comprising:

a base member, formed with a power supply interface thereon and a movement interface surface;

a glider member, adapted to move relative to said base member, having an interface surface in contact with said movement interface surface of said base member, said glider member including an electric connection; and

AUSTRALIAN PATENT OFFICE

an electronic interface, comprising a hollow portion connected to one of said members, said hollow portion defining an inside connection surface which is formed of an electrically conducting material, a rigid wire portion connected to the other of said members, said rigid wire portion having an outside surface which is electrically conductive, and which is received within said hollow portion, said outside surface thereby electrically contacting, said inside connection surface, and so that said rigid wire portion can slide within said hollow portion while still contacting the inside connection surface of said hollow portion, thereby allowing movement between said glider member and said base member while still allowing electrical contact therebetween.

25. A motor as in claim 24 wherein said rigid wire portion includes a bend therein, said bend defining an outside area which contacts said inside connection surface of said hollow portion.

26. A motor as in claim 24 wherein at least one of said members is formed of a semiconductor material and further comprising a native oxide film on said at least one of said base member or glider.

27. An apparatus for allowing relative movement of an electrical component, comprising:

a control element, producing an electrical voltage which will be used to drive a motor, said control element including electrical lead wires attached thereto;

a base member, having a sliding surface thereon and having an electrical connection;

a glider member, having a sliding surface thereon which is pressed against said sliding surface of said base member, said glider member also including an electrical connection;

an electrical interface, comprising a first element, connected to one of said electrical connections, having inside surfaces which are electrically connected to said one of said electrical connections, said inside surfaces defining an electrical connection surface;

a connection element, slidably connected to said electrical connection surface, and having an end portion which is located wholly within said inside surfaces of said electrical interface, and pressed thereagainst such that when said glider member slides relative to said base surface, said connection element moves within said inside surfaces but maintains

AUSTRALIAN PATENT OFFICE

electrical contact therewith.

28. Apparatus as in claim 27 wherein the connection element includes rigid lead wires with an element thereon which presses the rigid lead wires within said inside surfaces to thereby ensure contact therewith.

29. Apparatus as in claim 27 wherein said motor is an inchworm type stepper motor and said control element produces a voltage such that said glider alternately expands and contracts relative to said base, the expansion and contraction being done in a way which moves said glider forward on said base.

30. A linear actuator substantially as hereinbefore described with reference to the accompanying drawings.

31. A miniature linear stepper motor substantially as hereinbefore described with reference to the accompanying drawings.

32. A movement interface device for an electric motor substantially as hereinbefore described with reference to the accompanying drawings.

33. An apparatus for allowing relative movement of an electrical component substantially as hereinbefore described with reference to the accompanying drawings.

DATED this 12th day of November, 1999

MICRO MEDICAL DEVICES, INC.
By its Patent Attorneys
DAVIES COLLISON CAVE

AUSTRALIAN PATENT OFFICE

Fig. 1

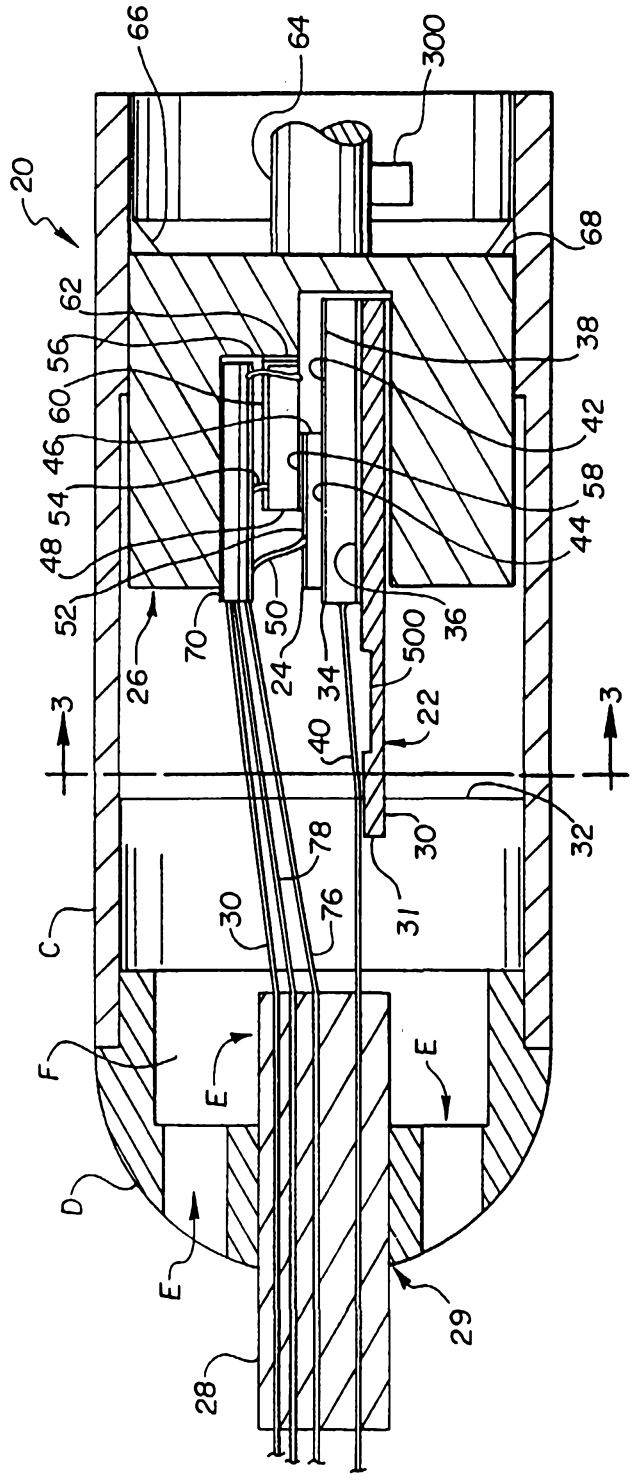

Fig. 2

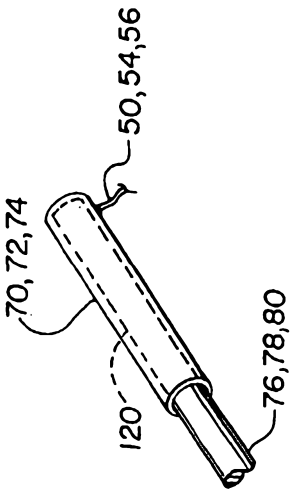

Fig. 1a

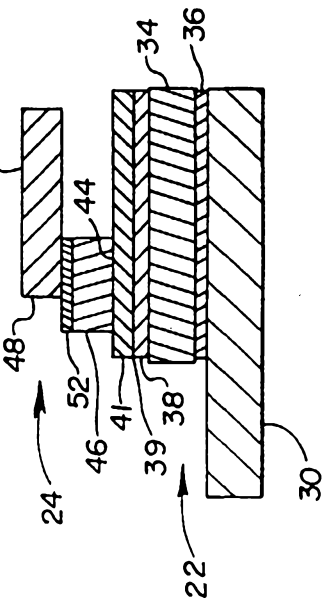

Fig. 3

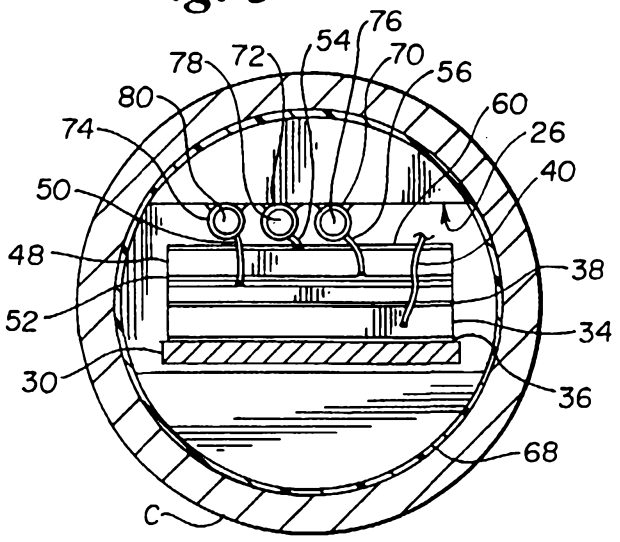

Fig. 4

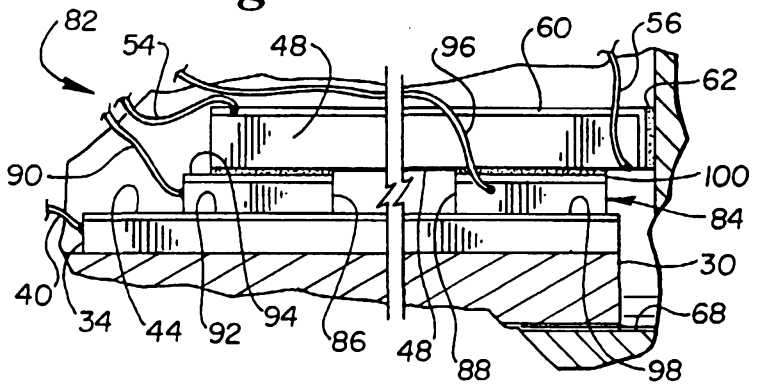

Fig. 5

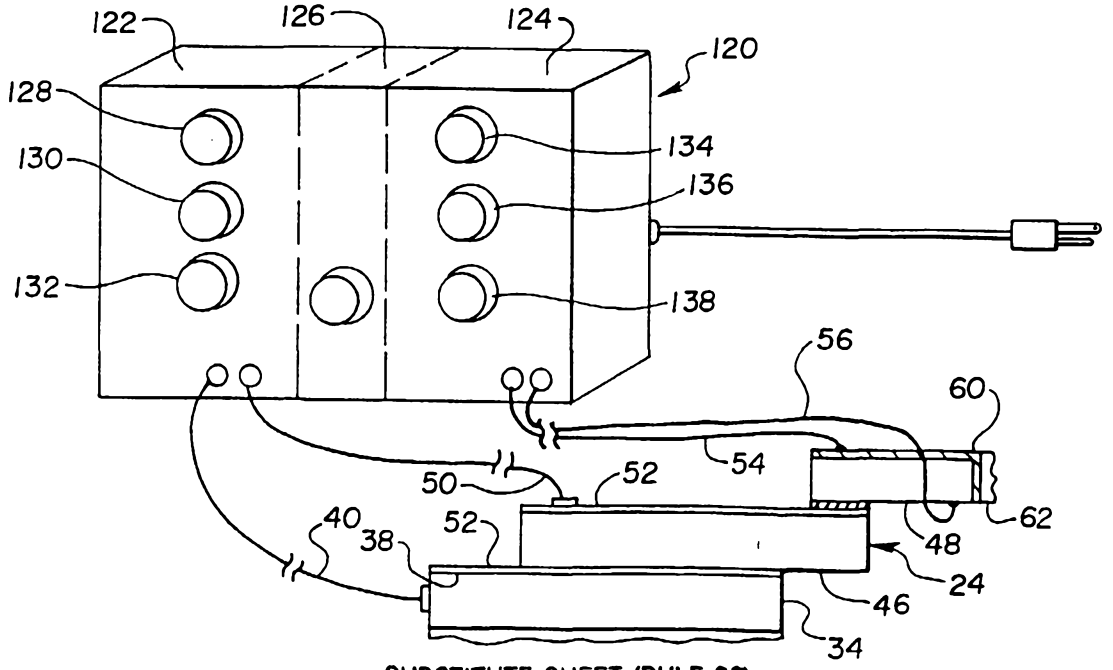

Fig.6

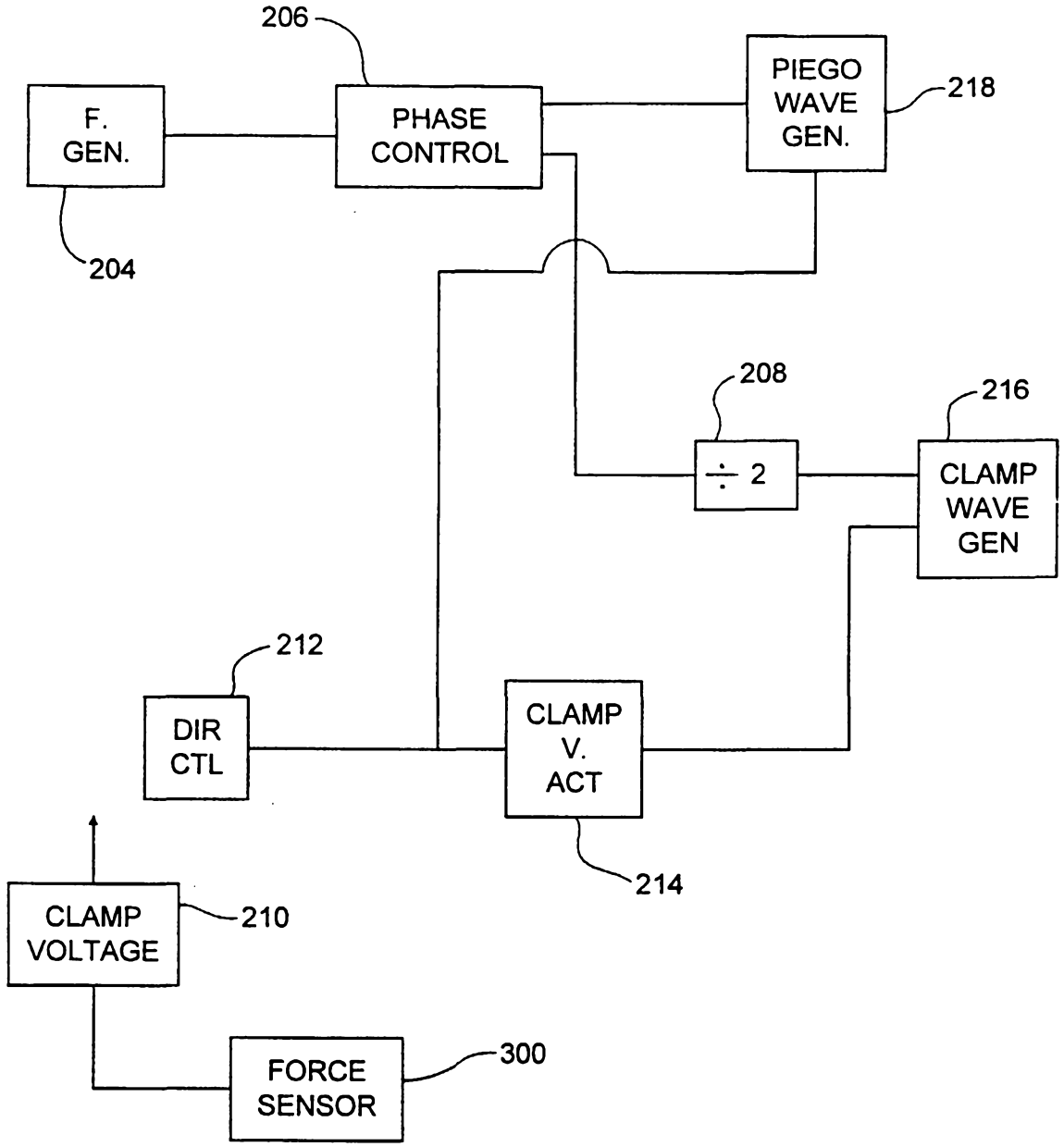
206
F. GEN.
PHASE CONTROL
PIEGO WAVE GEN.
218
204
208
216
÷ 2
CLAMP WAVE GEN
212
DIR CTL
CLAMP V. ACT
214
CLAMP VOLTAGE
210
FORCE SENSOR
300

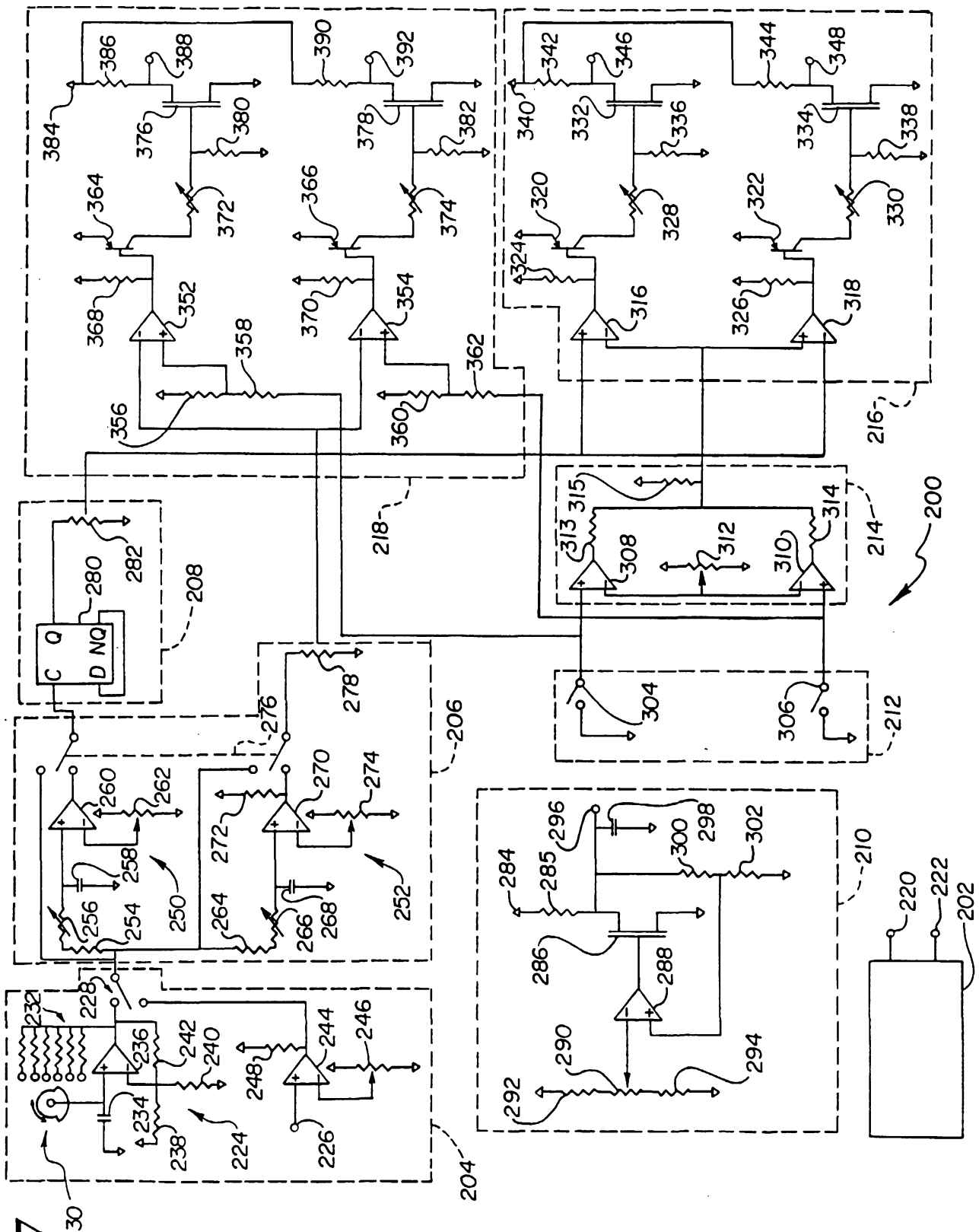

Fig. 7

Fig. 8

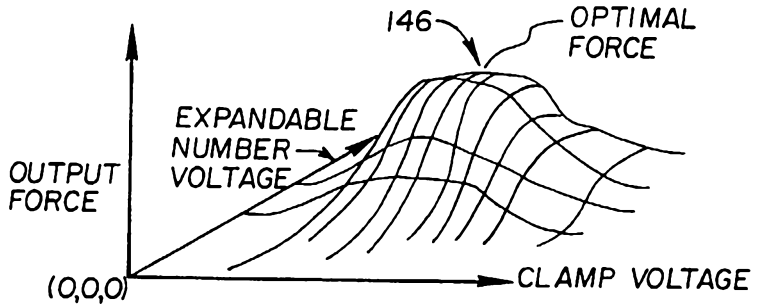
146
OPTIMAL FORCE
EXPANDABLE NUMBER VOLTAGE
OUTPUT FORCE
(0,0,0)
CLAMP VOLTAGE

Fig. 9

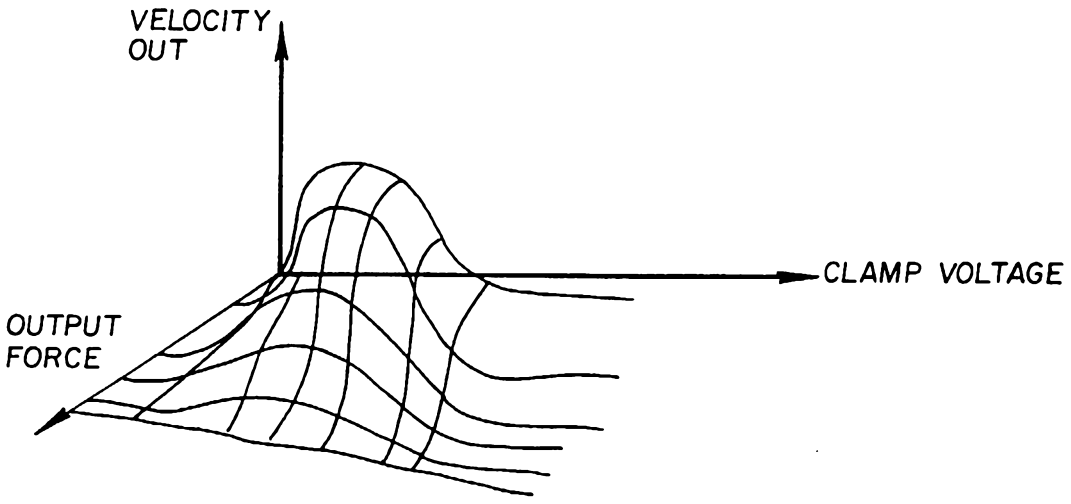
VELOCITY OUT
CLAMP VOLTAGE
OUTPUT FORCE

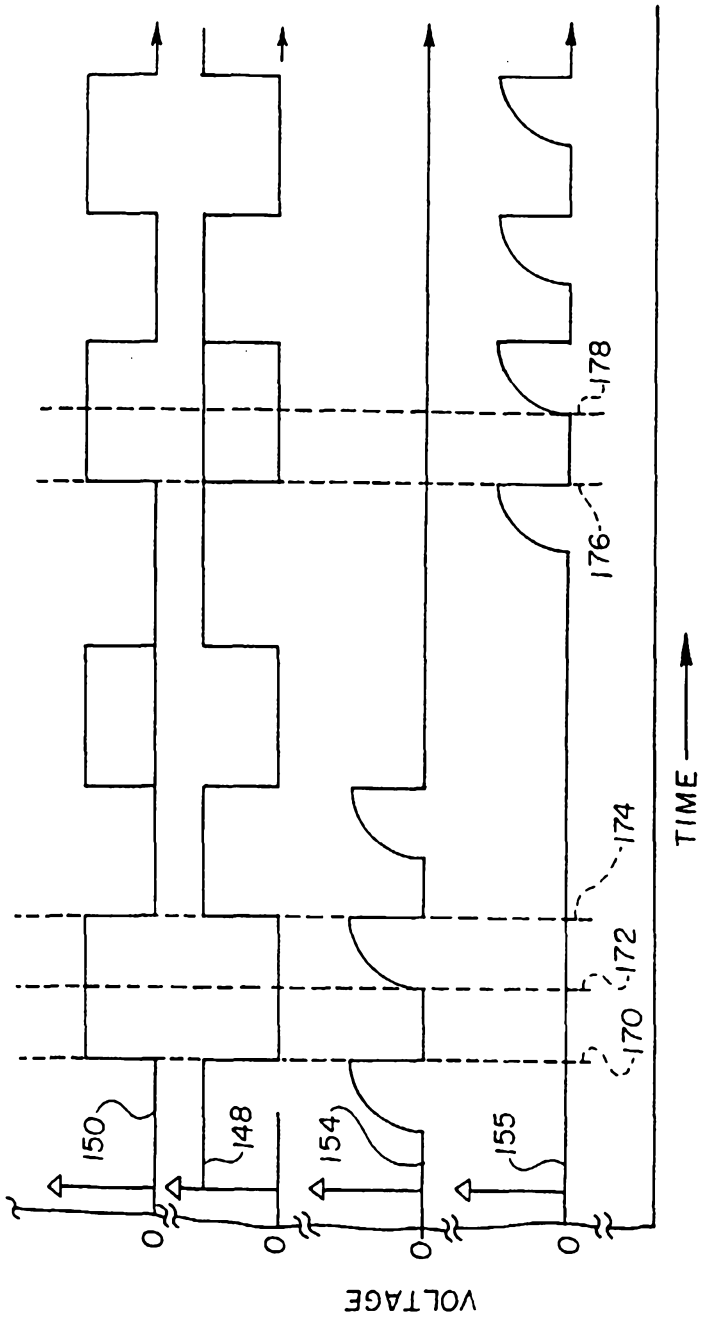

Fig. 10

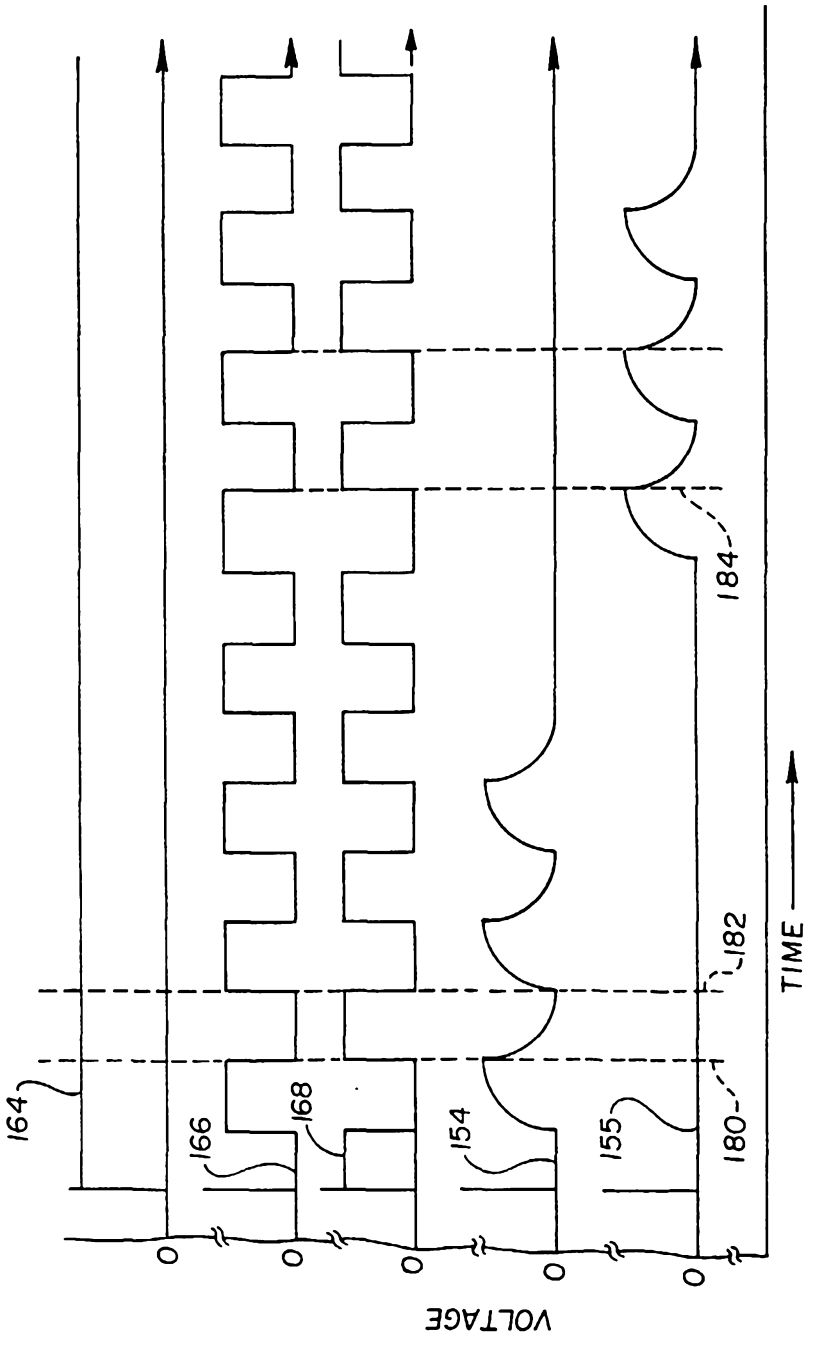

Fig. 11

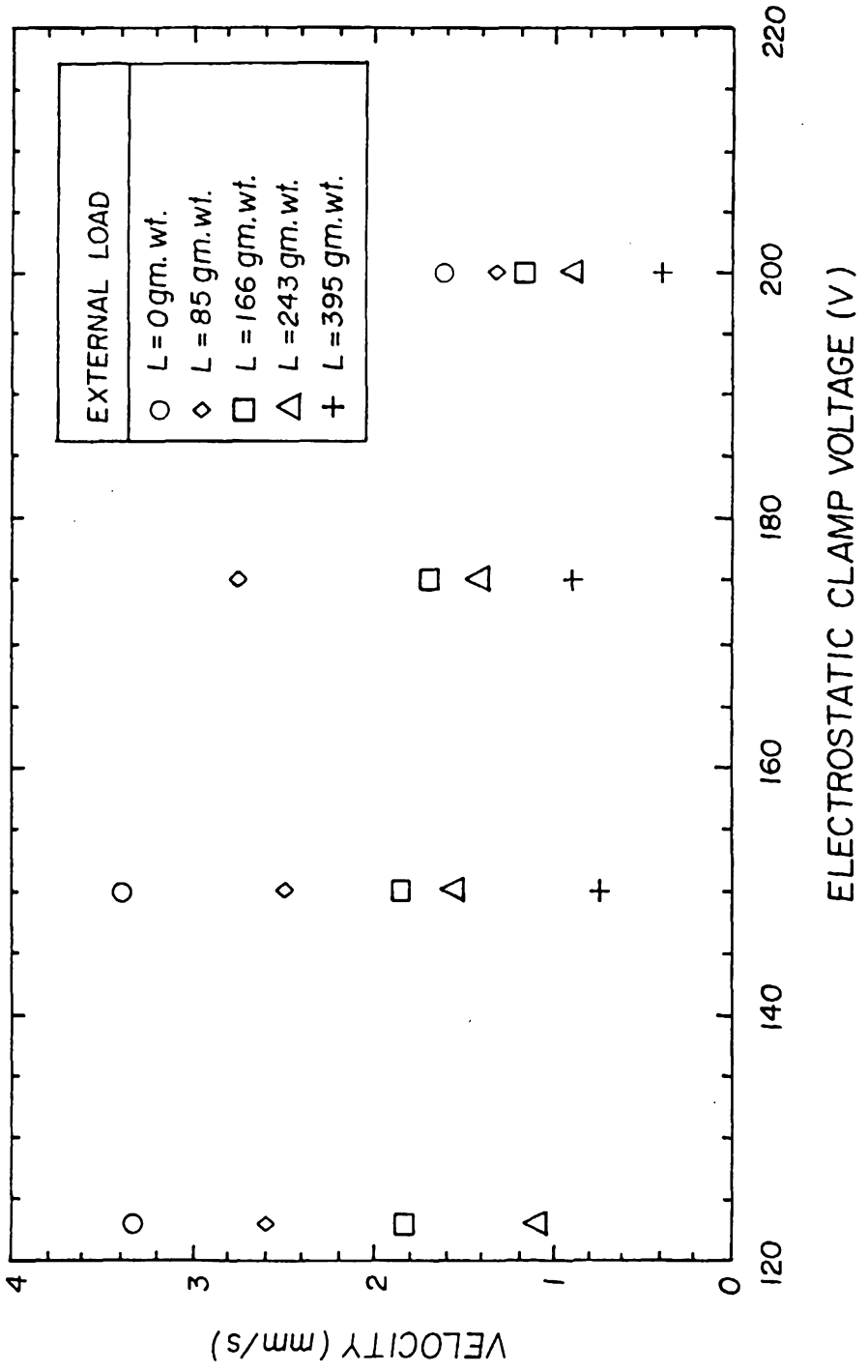
EXTERNAL LOAD
○ L=0gm.wt.
◇ L=85gm.wt.
□ L=166gm.wt.
△ L=243gm.wt.
+ L=395gm.wt.
VELOCITY (mm/s)
0
1
2
3
4
ELECTROSTATIC CLAMP VOLTAGE (V)
120
140
160
180
200
220

Fig. 12

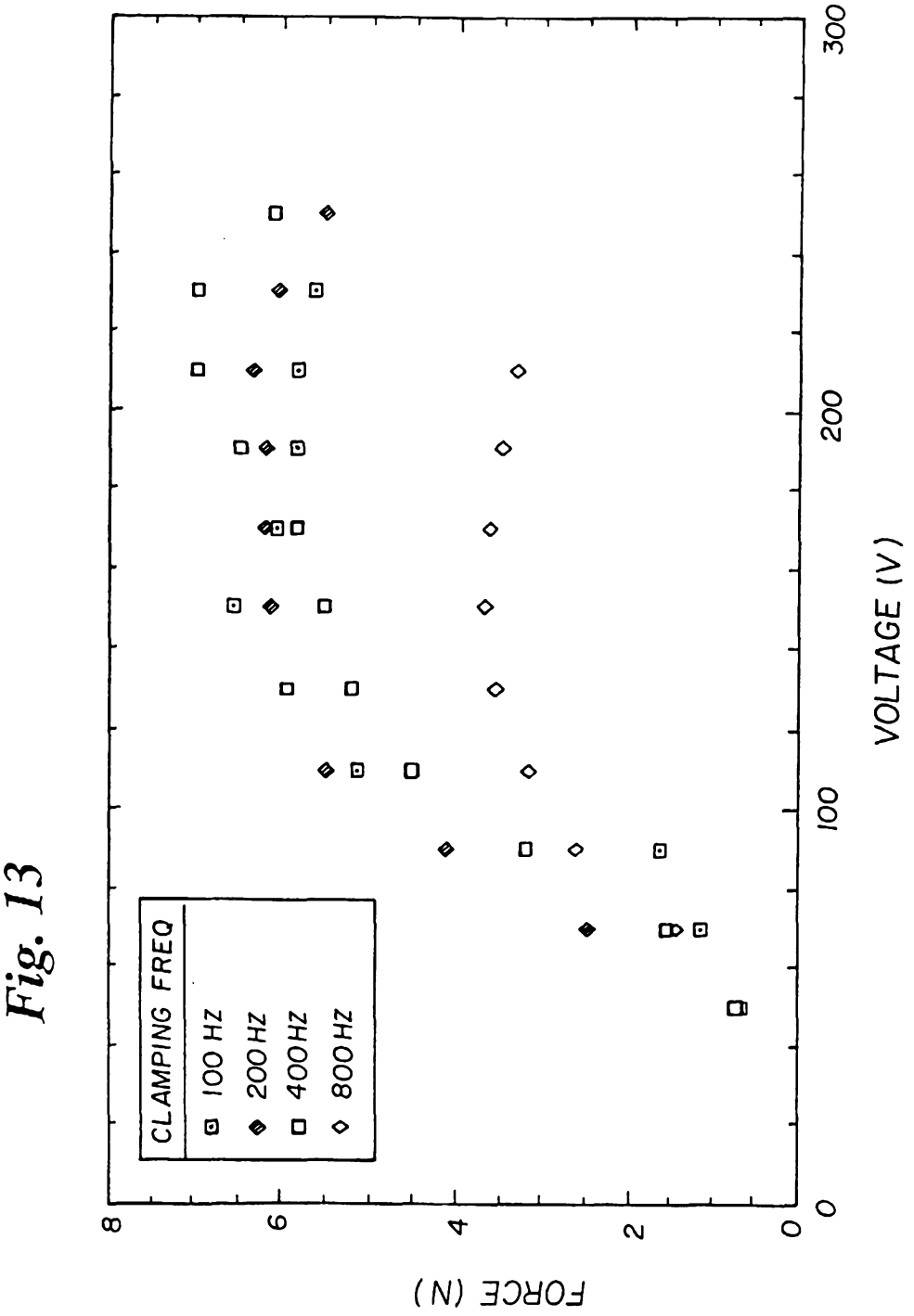
CLAMPING FREQ
100 HZ
200 HZ
400 HZ
800 HZ
FORCE (N)
0
2
4
6
8
VOLTAGE (V)
0
100
200
300

Fig. 13

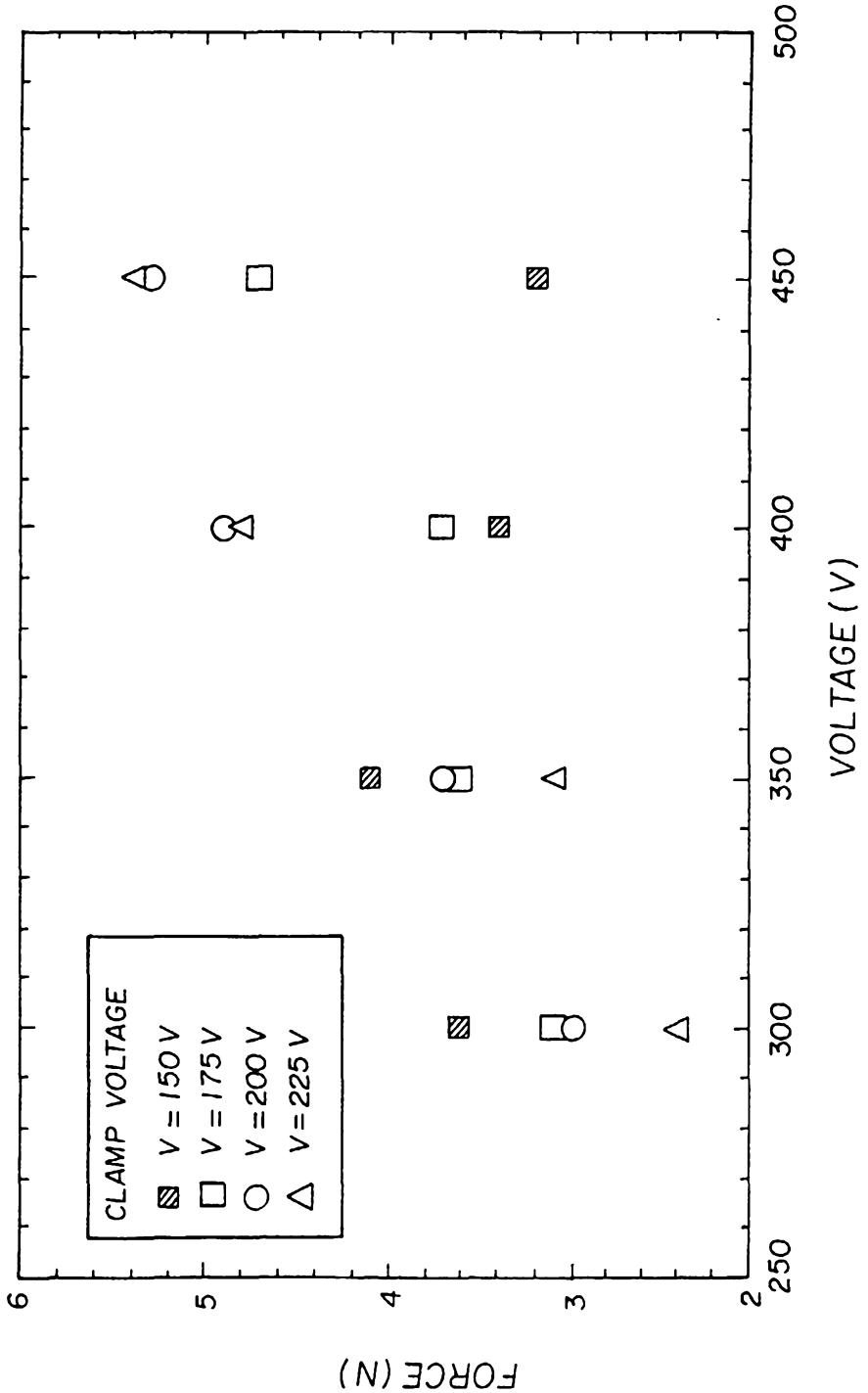
CLAMP VOLTAGE
V = 150 V
V = 175 V
V = 200 V
V = 225 V
FORCE (N)
VOLTAGE (V)
6
5
4
3
2
500
450
400
350
300
250

Fig. 14

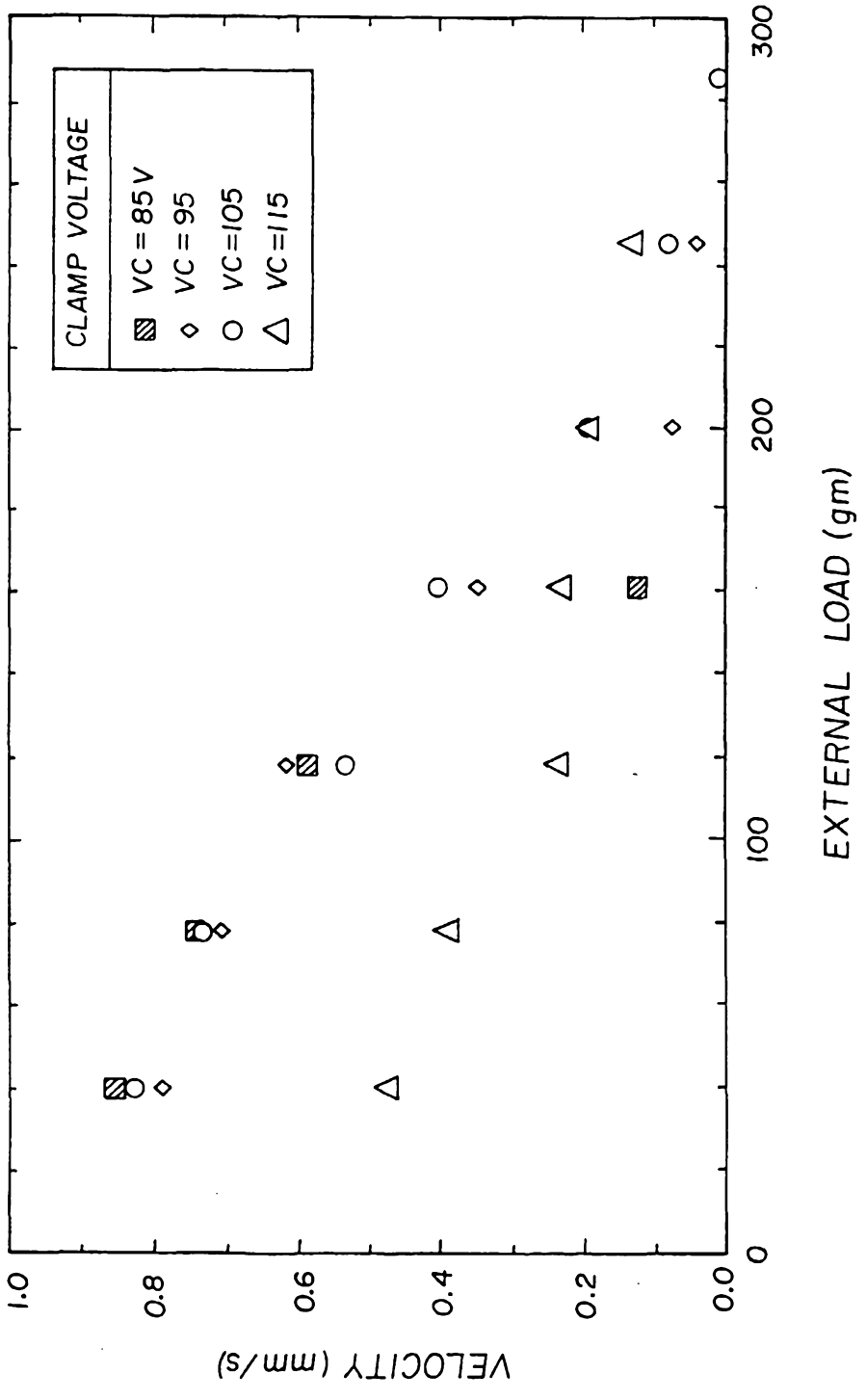
CLAMP VOLTAGE
VC = 85 V
VC = 95
VC = 105
VC = 115
VELOCITY (mm/s)
1.0
0.8
0.6
0.4
0.2
0.0
0
100
200
300
EXTERNAL LOAD (gm)

Fig. 15

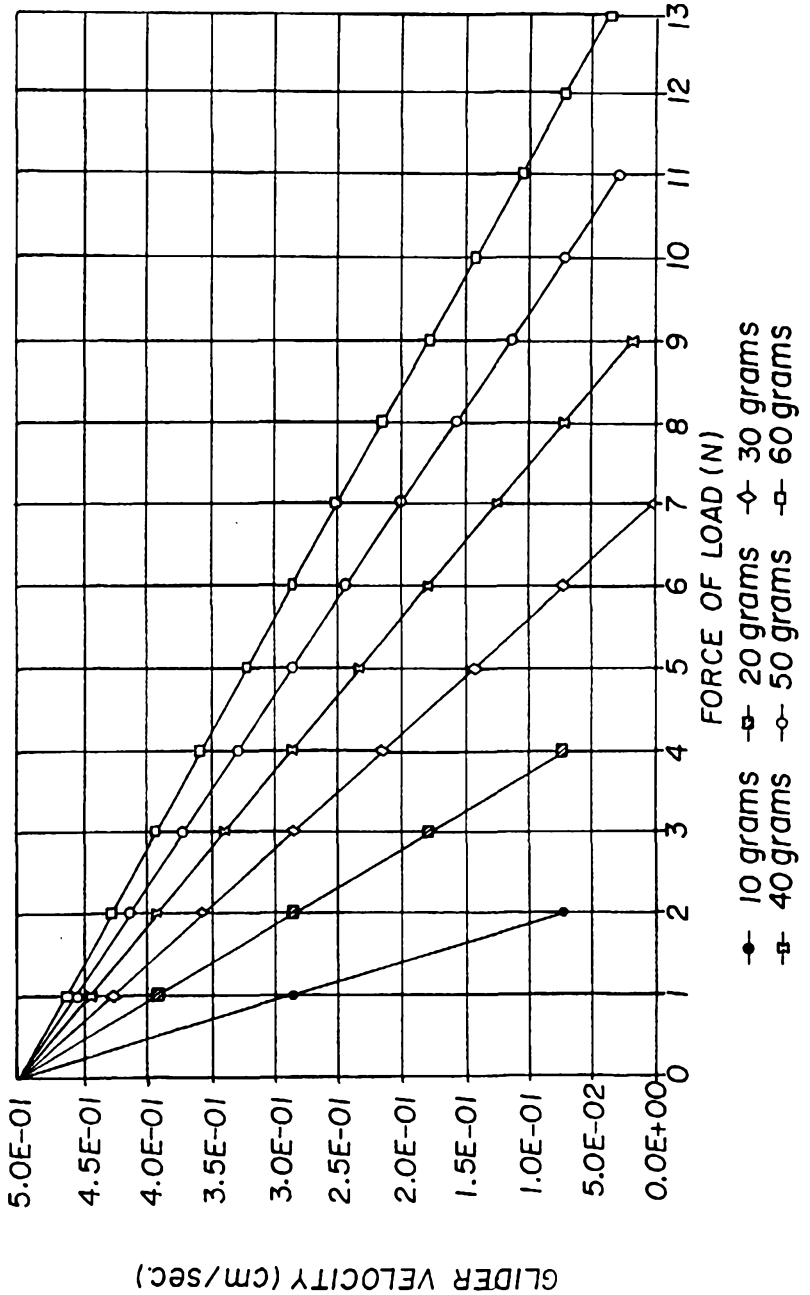
GLIDER VELOCITY (cm/sec.)
5.0E-01
4.5E-01
4.0E-01
3.5E-01
3.0E-01
2.5E-01
2.0E-01
1.5E-01
1.0E-01
5.0E-02
0.0E+00
0
1
2
3
4
5
6
7
8
9
10
11
12
13
FORCE OF LOAD (N)
10 grams
20 grams
30 grams
40 grams
50 grams
60 grams

Fig. 16

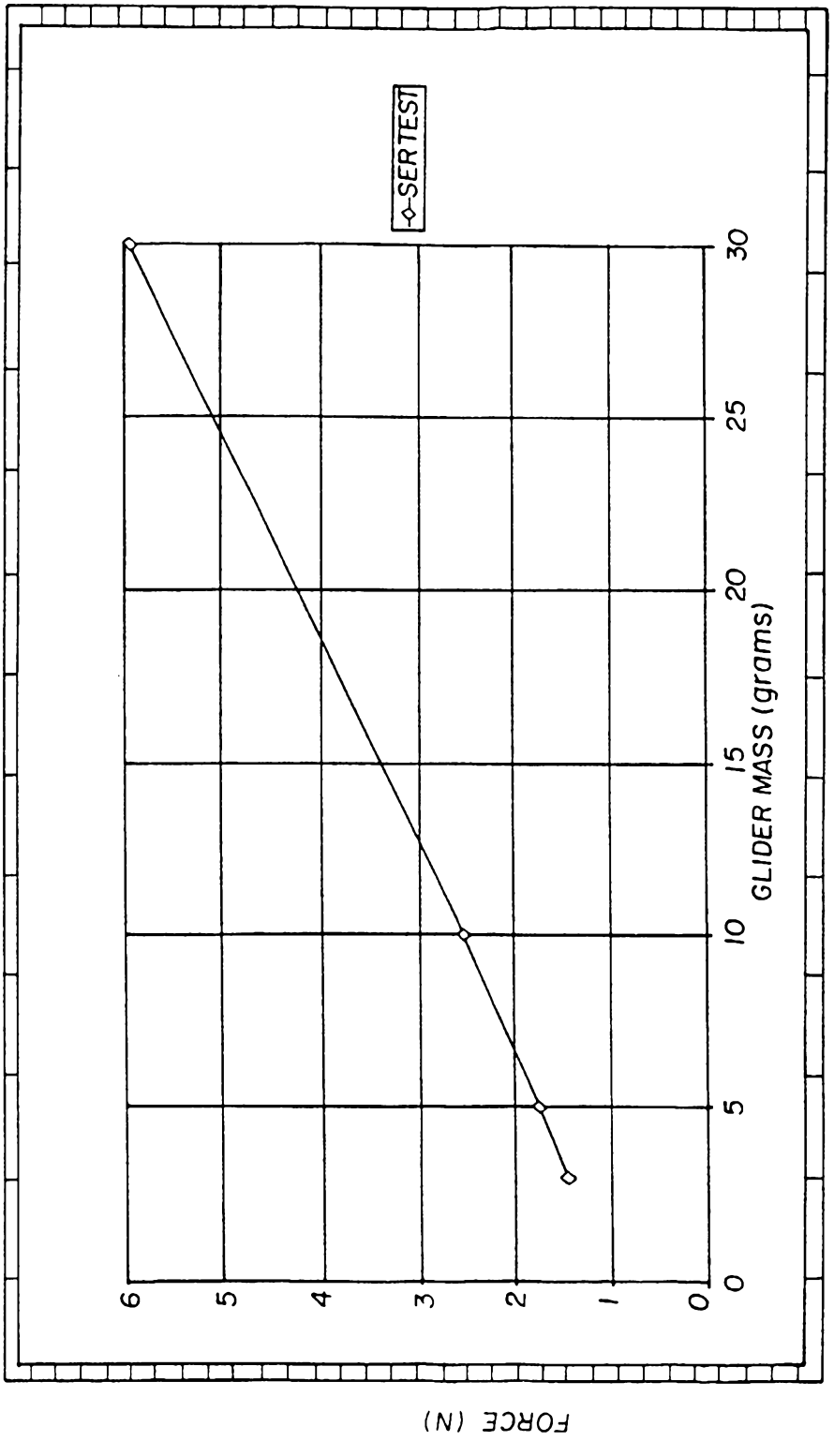

Fig. 17

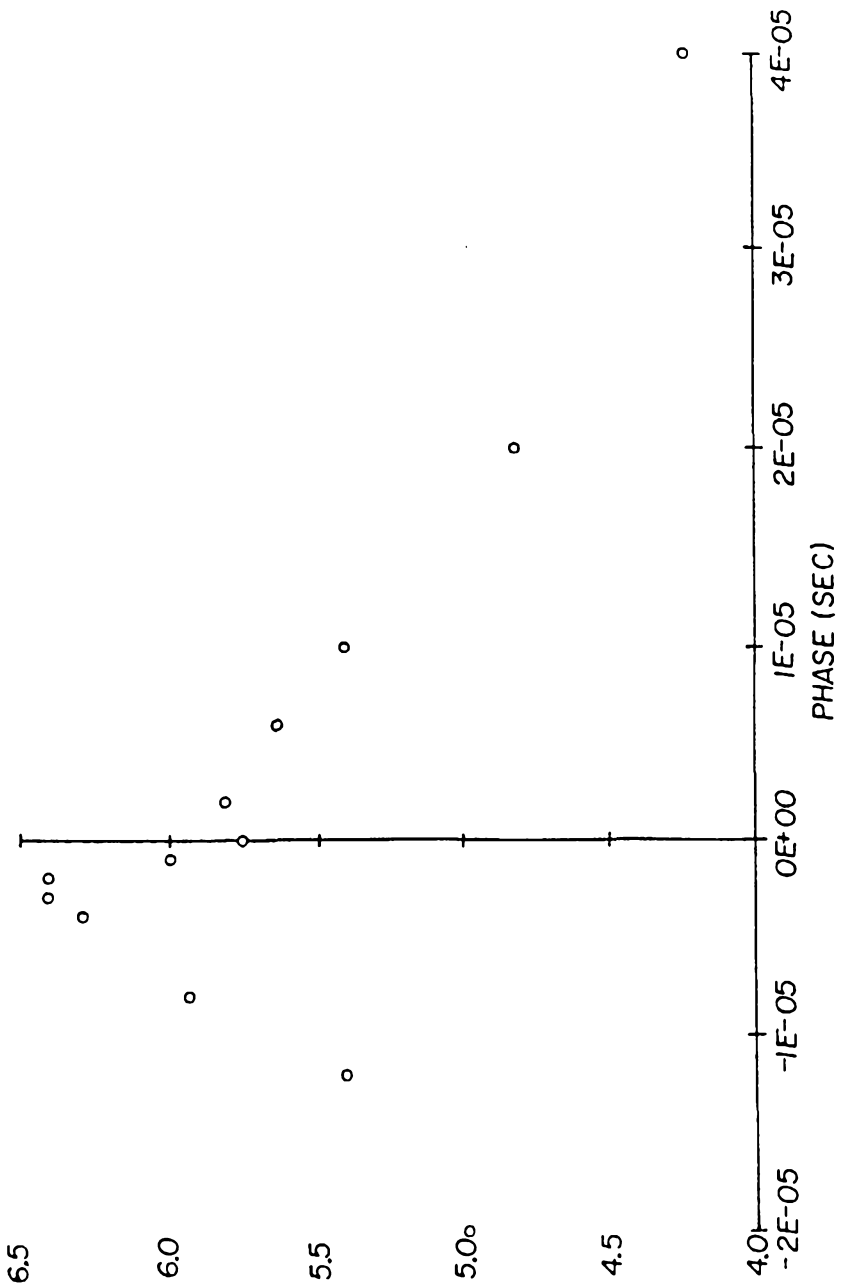

Fig. 18