Sept. 7, 1954 W. F. ROSENBERG 2,688,493

FOLDABLE PORTABLE BIN

Filed Feb. 7, 1950 2 Sheets-Sheet 1

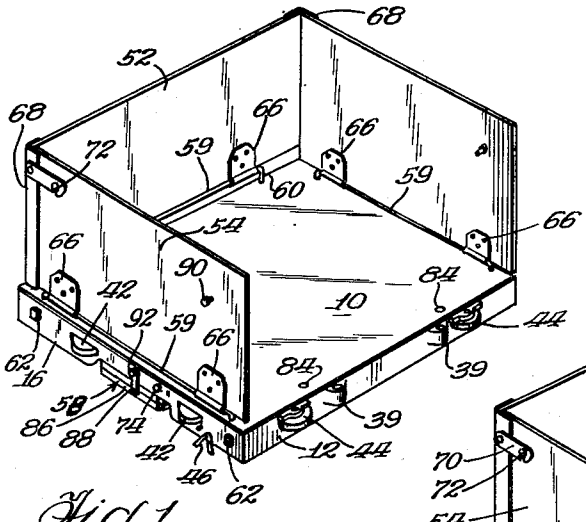

Fig. 1.

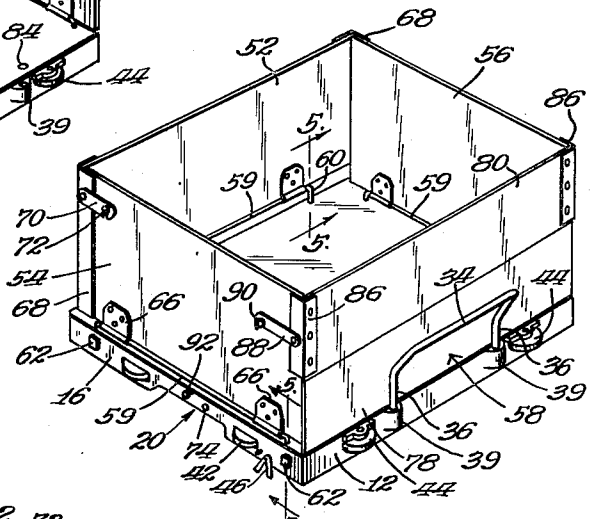

Fig. 2.

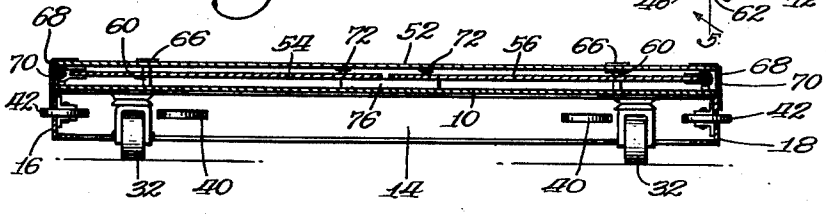

Fig. 3.

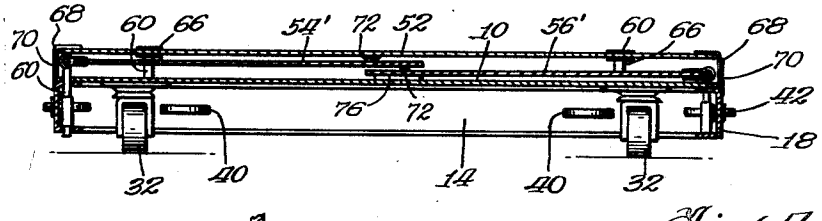

Fig. 4.

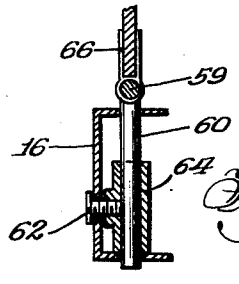

Fig. 5.

INVENTOR.
William F. Rosenberg
BY
Donald H. Sweet
Atty.

Sept. 7, 1954 W. F. ROSENBERG 2,688,493

FOLDABLE PORTABLE BIN

Filed Feb. 7, 1950 2 Sheets-Sheet 2

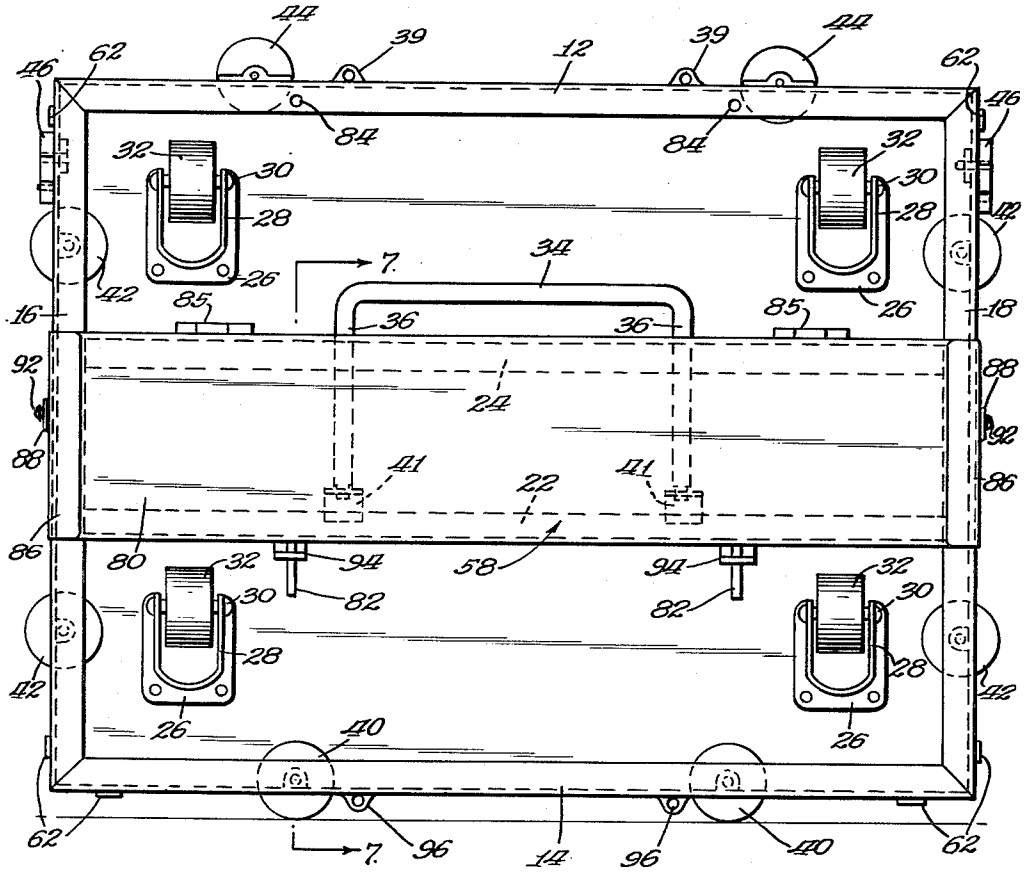

Fig. 6.

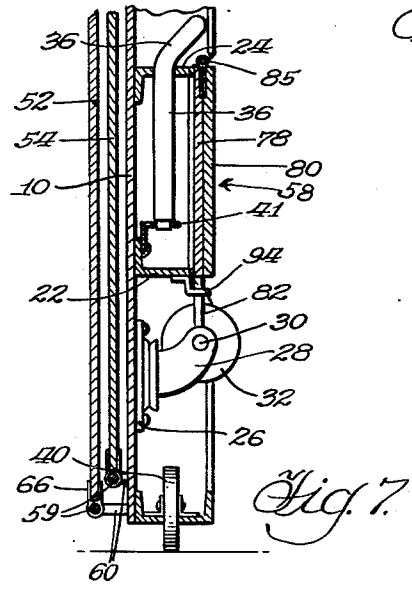

Fig. 7.

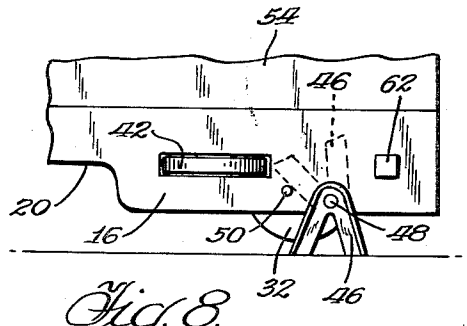

Fig. 8.

INVENTOR.
William F. Rosenberg
BY
Donald A. Sweet Attty

Patented Sept. 7, 1954

2,688,493

UNITED STATES PATENT OFFICE

2,688,493

FOLDABLE PORTABLE BIN

William F. Rosenberg, Chicago, Ill.

Application February 7, 1950, Serial No. 142,810

3 Claims. (Cl. 280—36)

1

My invention relates to trucking and the general problem of transporting and storing package freight and miscellaneous commodities. The wages of stevedores and warehouse personnel who handle package freight, express and other merchandise, represent a large item of expense, and the labor of handling such materials is onerous. It has been proposed to use box-like containers, relatively small compared with the entirety of a railroad freight car or moving van, so that the individual packages can be stacked in larger units, and the larger units then placed in the van body or freight car more conveniently, not only with respect to receiving, but especially with respect to delivery. In spite of many proposals along this line, substantially 100% of the package express and freight, so far as I am aware, is still handled on the individual package, stevedoring basis.

In the accompanying drawings,

Figure 1 is a perspective of a trucking unit, set up to receive package freight, with an open front;

Figure 2 is a similar perspective of the same unit with the front closed and the pulling handle assembled;

Figure 3 is a horizontal section of the unit of Figure 1 with the side walls folded down;

Figure 4 is a similar section indicating the use of higher side walls that overlap when folded;

Figure 5 is a detail section on line 5—5 of Figure 2;

Figure 6 is a bottom plan view of the unit with the front wall and pulling handle in storage;

Figure 7 is a section on line 7—7 of Figure 6; and

Figure 8 is a somewhat enlarged view of one of the corners of the chassis.

In the embodiment of the invention selected for illustration, the unit comprises a chassis and a superstructure. The chassis includes the floor 10 and a frame below the floor. The frame includes a complete peripheral set of channels with their flanges turned inwardly, including a front channel 12, a rear channel 14 and end channels 16 and 18. The channels 16 and 18 are of full depth at their ends and of reduced depth in the central portions to define a receiving and storage space 20. The flooring 10 is also supported along intermediate lines longitudinally by angles 22 and 24. The chassis also includes four caster wheels, which, per se, may be of conventional construction. Each caster wheel includes a foundation plate 26 fastened to the under surface of the floor 10 and a pivoted frame 28 including horns supporting the pintle 30 for the wheel proper 32. The wheels 32 have their horizontal axes at or just a little above the lower level of the chassis so that when the chassis is horizontal on a horizontal support, the entire weight is carried on the wheels and can be pushed around very easily.

2

I provide a U-shaped pulling handle comprising a bight 34 and dog legs 36. The front channel 12 carries spaced sockets 39 to receive the ends of the legs of the handle. When not in use, the handle may be stored in the chassis, as by slipping the legs 36 through openings in the vertical leg of the angle 24. Depending on the length of the legs and the spacing of the angles, the ends of the legs 36 may enter similar holes in the angle 22, or, as illustrated in Figure 7, in brackets 41 fastened to the horizontal leg of the angle 22.

In the rear channel 14 I provide two bumper wheels 40 approximately at the quarter points of the length of the channel. When the device is being rolled around in horizontal position, either loaded or unloaded, these bumper wheels will be the first parts to contact a vertical wall or another truck or a pile of objects to reduce the impact when such contacts occur, and avoid friction between the contacting parts. An equally important function for the bumper wheels 40 is indicated in Figure 7. When such a truck is not in use it can be turned up on edge quickly, and then the bumper wheels 40 engage the supporting floor so that the truck can be trundled off into a corner, and a large number of such trucks can be stacked on edge in an extremely small space.

Similar bumper wheels 42 are provided for each of the end channels 16 and 18. Under many conditions of service the front channel 12 may be preferred without bumper wheels. I have indicated wheels 44 projecting somewhat farther than the wheels 42 so that they stick out far enough to protect the socket 39.

It is often desired to adjust such a unit so that it will not roll around accidentally or too easily when lightly jostled. Each of the channels 16 and 18 next the corners where they join the front channel 12 carries a horse 46 in the nature of a V pivoted at its apex on a pivot 48 next the lower edge of the channel. The horse illustrated has legs of angle cross section and is shown in Figure 8 in operative position. To get the parts into the position of Figure 8 it is only necessary to lift the front edge of the truck about two inches and

give the horse a bit of a pull or a kick to displace it from the dotted line position of Figure 8 to the full line position, where it projects down far enough to hold the adjacent caster wheel 32 a little off the supporting floor. When not in use, the horse is kept in dotted line position by contact with a simple stop pin 50. With the parts in the position of Figure 8, to get the truck rolling again it is only necessary to push to the left, and it will ride over the left leg of the horse and let itself down on the caster 32 and continue moving that direction. In pushing the truck up a ramp that is not too steep, the horse will function as a sprag, but if it is not desired to check return movement, a touch of the hand or toe will swing it up to inoperative position.

It will be obvious that the structure so far described is a useful unit for many purposes. A great enlargement of its sphere of usefulness is achieved by providing it with a compact foldable superstructure so that it can function as a box rather than as a pallet. The superstructure illustrated comprises a foldable rear wall 52, end walls 54 and 56, and a removable front wall indicated as a whole by the reference character 58. Each end wall is hinged on a horizontal axis along its lower edge. Each hinge comprises a horizontal pintle 59 and vertical legs 60 extending downwardly at both ends thereof as best illustrated in Figure 5. Each mounting leg 60 is receivable in vertically aligned holes in the legs of its channel and adjustably fastened at the desired height, as by means of a set screw 62 accessible from outside. For compactness and strength I prefer to thread the set screw 62 into a sleeve 64 which may be set on the lower leg of the channel and welded in place. Each end wall comprises a wall panel proper and a plurality of hinge straps 66 encircling the pintle 59.

The rear wall 52 is mounted on hinge means essentially identical with those for the end walls, but its hinge is set at a higher level so that, as indicated in Figure 3, it can be folded down over the folded end walls and still lie flat. The rear wall 52 is provided with corner battens 68, one along each vertical edge. In the unfolded position of Figures 1 and 2 these battens form abutments for the edges of the end walls. When in set-up condition, the parts are held in place by catches 70 pivoted on the battens and pins 72 on the end walls, which pins enter notches in the catches 70. In folded-down position the battens 68 enclose the hinges of the end walls 54 and 56, and the catches 70 hook over pins 74 on the chinnels 16 and 18 to hold the parts in folded condition. It will be noted that in this condition the pins 72 function as abutment spacers between the folded end walls and the folded rear wall. Because the parts are standing on edge, they will tend to lie in the position of Figure 3, but if it is desired to block them against rattling, a bit of board 76 may be dropped in edgeways between the floor 10 and the folded end walls.

Referring now to Figure 4, I have indicated end walls 54' and 56' of such a height that their ends overlap when they are folded down. In this case the hinge structures all remain unchanged, but the hinge for the end wall 54' is adjusted enough higher to enable it to fold above the level of the end wall 56', and the hinge for the rear wall 52 is moved up the corresponding distance. Thus, as clearly indicated in Figure 4, the pin 72 on the end wall 56' is a spacer abutment for the end wall 54', and the pin 72 on the end wall 54' is a spacer abutment for the rear wall 52.

A structure thus provided with enclosing walls on three sides is very convenient for piling material that might slide or cascade off a pallet. When it is desired to complete the enclosure, the end wall 58 is employed. This wall is made in two panels of substantially equal width, a lower panel 78 and upper panel 80. The lower panel is provided with two spaced studs 82 receivable in vertical sockets 84 in the front channel 12. After it is set in place, the upper panel 80 may swing 180° around hinges 85 into the position of Figure 2. Corner battens 86 are provided on the ends of the upper panel only, to take over the edges of the end walls 54 and 56. The upper panel may be left folded down, depending on the amount of material to be held in place, or folded up as in Figure 2. In folded-up condition it is fastened in place by catches 88 located midway between the upper and lower edges of the panel 80 and taking over pins 90 on the end walls. When not in use, as clearly indicated in Figure 7, the panels 78 and 80 are folded together and nested in the trough 20 defined by the narrow central sections of the channels 16 and 18. In this position they are held in place by hooking the catches 88 over pins 92 on the channels 16 and 18. Brackets 94 may be provided to receive the studs 82. Thus the front wall 58, when not in use, is securely held in place out of the way within the frame, ready for use when desired.

It will be obvious that, in equipment having specified and substantially uniform service, all the hinges 58 could be made fixed and non-adjustable. However, adjustability facilitates removal when the walls are not desired at all, adjustment to change from high walls to low walls, and adjustment for handling bulk materials. I have illustrated the parts with the adjustment preferred for handling miscellaneous package freight, where it is desirable to have at least a little ventilation under many conditions. But with the parts in the positions of Figure 1, loosening of the set screws 62 will let all the hinges drop down into contact with the floor. In this condition corn or stoker coal or other bulk commodities can be shoveled or poured into the box. A little strip of newspaper or burlap laid on the floor against the hinges will let the container function simply and effectively even for such free-flowing materials as wheat or oats.

It will be obvious that the structure lends itself readily to covering with a tarpaulin or hatch, if it is to be allowed to stand exposed to the weather. The pulling handle is valuable whenever desired, with or without the front wall in place, and sockets 39 are duplicated at 96 on the rear channel 14. These sockets are also available for hooking onto large or small tractors of any type, and for connecting a series of bins together to be pulled as a train.

Others may readily adapt the invention for use under various conditions of service by employing one or more of the novel features involved, or equivalents thereof. As at present advised with respect to the apparent scope of my invention, I desire to claim the following subject matter.

I claim:

1. A portable bin comprising, in combination: a rectangular chassis; said chassis including a floor and a peripheral frame below said floor; wheels on said frame extending below the level of said frame; and a superstructure of foldable panel members adapted, when unfolded, to extend up from the periphery of said floor and define a box-like enclosure, and to fold down

into compact relation adjacent said floor; said superstructure including a back member along one long side of said chassis and end members along both short sides of said chassis; all said members being pivotally mounted for rotation about an axis near their lower edges into folded and unfolded positions; said end members being hinged in offset planes closer to the floor than said back member, whereby after said end members are folded down said back member can be folded over said end member; said back member having angular projections at both ends; said angular projections, in unfolded condition, forming stop members to limit the unfolding of said end members; said projections, in folded condition, enclosing the hinges of said end members; hook and pin means, in the nature of a hook pivoted on each of said angular back member projections, remote from the back member hinge, and a pin on the corner of the unfolded end member positioned to be engaged by said hook, for locking said end members and back members in unfolded condition; said pin members, when in folded condition, functioning as stops to engage the folded back member and hold the parts in alignment; and pins on said frame positioned to engage said same hooks on said back member when folded down, to hold all said folded members in folded position.

2. A portable bin comprising, in combination: a rectangular chassis; said chassis including a floor and a peripheral frame below said floor; supporting wheels on said frame; and a superstructure of foldable panel members adapted, when unfolded, to extend up from the periphery of said floor and define a box-like enclosure; three of said members being mounted to fold down into compact relation adjacent said floor; a front closure member; pin and socket means for fastening said front member in place along its lower edge; said front member being divided longitudinally and centrally into an upper and a lower panel; hinge means connecting said upper and lower panels along their adjacent edges; and extensions on the ends of said upper panel extending inwardly to engage the adjacent corners of the unfolded end panels; hook and pin means

for said upper panel including a hook at each end of said upper panel positioned midway between its upper and lower edges, and registering pins on said end walls; said frame including a longitudinally extending central portion of reduced thickness with the lower level cut away to define a space for housing said front wall with said panels folded together; and pins on said frame positioned to engage said same hooks on the upper panel of said front wall to hold said folded front wall in position housed in the under portion of said chassis.

3. A portable bin comprising, in combination: a rectangular chassis; said chassis including a floor member; supporting wheels on said chassis; and a superstructure of foldable panel members adapted, when unfolded, to extend up from the periphery of said floor and define a box-like enclosure; three of said members being mounted to fold down into compact relation adjacent said floor; a front closure member; means for fastening said front member in place along its lower edge; said front member being divided horizontally into an upper and a lower panel; hinge means connecting said upper and lower panels along their adjacent edges; and extensions on the ends of said upper panel extending inwardly to engage the adjacent corners of the unfolded end panels; quick-detachable means for fastening the ends of said upper panel to the adjacent edges of said end panels; said frame including a portion shaped to define a space for housing said front closure with its said panels folded together.

References Cited in the file of this patent

UNITED STATES PATENTS

Number	Name	Date
117,085	Lawrence	July 18, 1871
620,059	Sykes	Feb. 21, 1899
973,578	Springer	Oct. 25, 1910
995,566	Rasmussen	June 20, 1911
1,245,591	Hudson	Nov. 6, 1917
2,103,231	Blake	Dec. 28, 1937
2,152,217	Shaw	Mar. 28, 1939
2,447,028	Riddick	Aug. 17, 1948