Jan. 5, 1965 J. J. TURNER 3,163,980

WATER JET PROPULSION

Filed Jan. 23, 1963 2 Sheets-Sheet 1

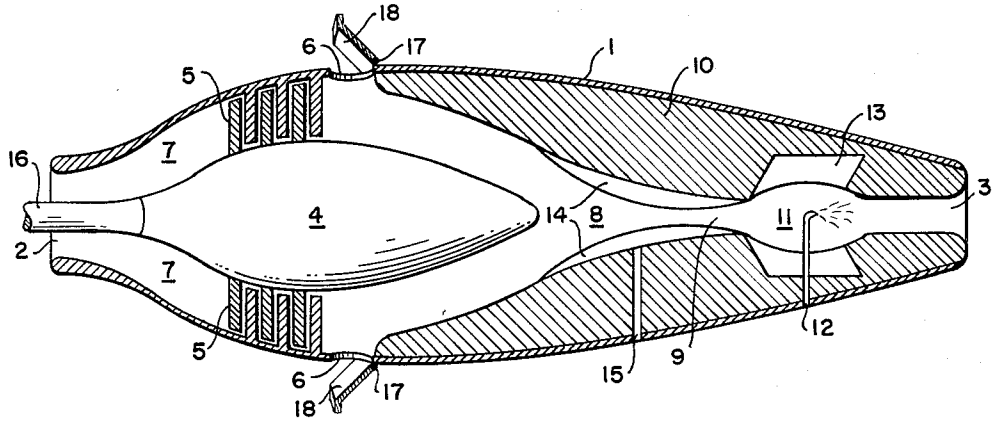

FIG. 1.

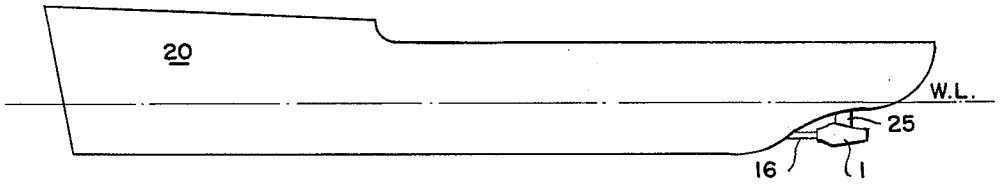

FIG. 4.

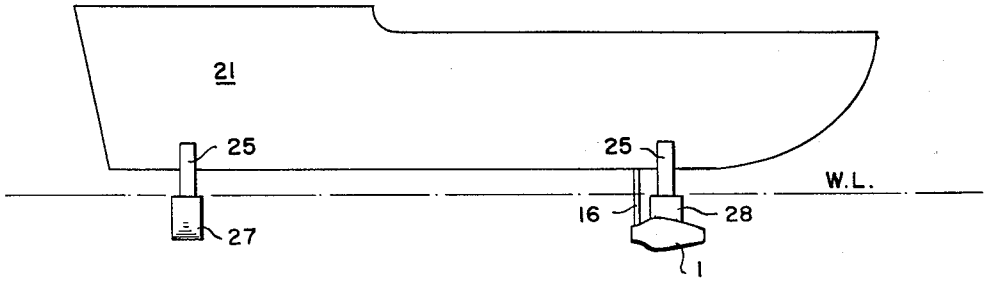

FIG. 5.

INVENTOR.
JAMES J. TURNER
BY L. A. Miller
E. G. Germain, Jr.

Jan. 5, 1965 J. J. TURNER 3,163,980

WATER JET PROPULSION

Filed Jan. 23, 1963 2 Sheets-Sheet 2

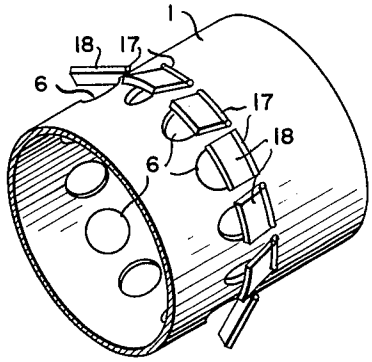

FIG. 2.

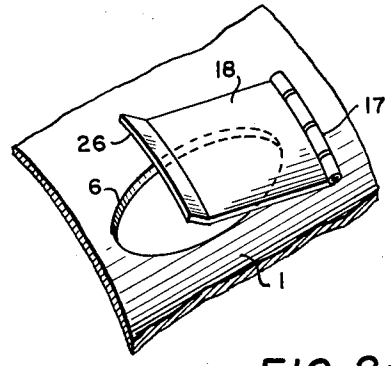

FIG. 2a.

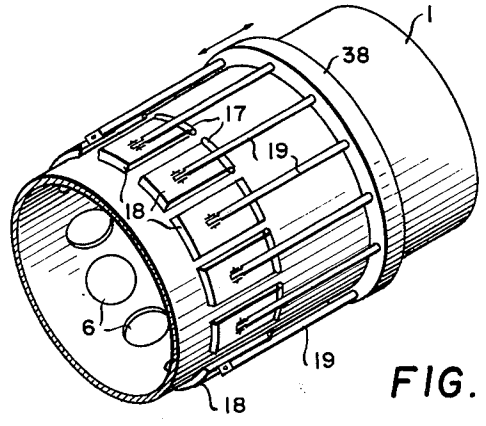

FIG. 3.

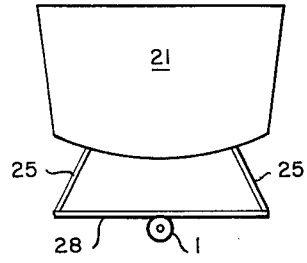

FIG. 6.

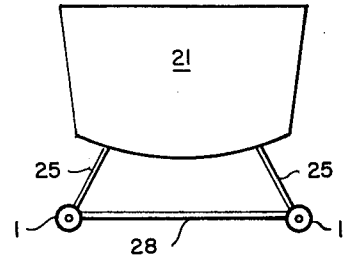

FIG. 7.

INVENTOR.
JAMES J. TURNER
BY L. A. Miller
E. G. Germain Jr.

United States Patent Office 3,163,980 Patented Jan. 5, 1965

3,163,980

WATER JET PROPULSION

James J. Turner, 215 Fairfax Road, Alexandria, Va.

Filed Jan. 23, 1963, Ser. No. 253,514
6 Claims. (Cl. 60—35.5)
(Granted under Title 35, U.S. Code (1952), sec. 266)

The invention described herein may be manufactured and used by or for the Government of the United States of America for governmental purposes without the payment of any royalties thereon or therefor.

This invention relates to a quiet, high performance means of propulsion for a ship or water craft without sacrificing a large amount of efficiency for cruising conditions.

The principal object of this invention is to provide an efficient jet propulsion unit for a ship or water craft operating at any range of speed.

Other objects and advantages of the invention will become apparent from the following description and the accompanying drawings which illustrate, only by way of example, several embodiments of the invention.

FIG. 1 shows a water jet propulsion unit.

FIG. 2 shows self-actuating plates for opening the periphery inlets.

FIG. 2*a* shows a single plate.

FIG. 3 shows a different mechanism for opening the periphery inlets.

FIG. 4 shows the water jet propulsion unit in relation to a ship.

FIG. 5 shows another embodiment of FIG. 4 showing a propulsion unit in relation to a hydrofoil craft.

FIG. 6 is a rear view of FIG. 5.

FIG. 7 is a different embodiment from that shown in FIG. 6.

Referring to FIG. 1 there is shown a propulsion unit in accordance with my invention which is adapted for jet propulsion of a projectile or craft through water. This unit may be attached to the projectile or craft in any convenient manner.

The propulsion unit comprises an outer shell **1**, which may be torpedo shaped, having a circular cross section with an open mouth **2** and an exhaust nozzle **3**.

The interior of the open mouth **2** comprises a circular passage **7**, having a donut shaped cross section, that is defined by two concentric circles, one circle being the outer shell and the other circle being the side of a pump jet **4**. The pump jet **4** is driven through the shaft **16**. In the circular passage **7** are propellers or compressor blades **5** of the pump jet **4**. Periphery inlets **6** at the rear of the compressor blades **5** allow access from the exterior of the shell **1** to the circular passage **7**. The inlets are normally closed by plates **18** hinged **17** to the outer shell **1**. The circular passage **7** narrows to a pipe in cross section at the pump jet nozzle **8**. A continuation of the pump jet nozzle **8** is the entrance vane **9** of a ram jet **10**. The entrance vane empties into a fuel injection chamber **11** which in turn leads to the exhaust nozzle **3** of the propulsion unit. Fuel line **12** enters the fuel injection chamber **11**. As an optional feature a boiling water reactor **13** could be used. The reactor **13** is circular and would constitute the wall of the fuel injection chamber **11**. The reactor **13** could be the sole source of power, i.e., the fuel line **12** would not be present, or the reactor **13** could be used in conjunction with the fuel line **12** to give two sources of added thrust.

The diameter of the pump jet nozzle **8** can be reduced in size by moving the walls of the nozzle **8** together so as to minimize losses at low speeds. One method of reducing the diameter would be by use of an inflatable section **14** inflated through an air inlet line **15**. It is to be understood that the section **14** could be inflated by means other than

air or that the pump jet nozzle **8** could be narrowed by means other than an inflatable section **14**.

Operation

The pump jet **4** draws water in the mouth **2** and along the passage **7** to where it is compressed by the propellers **5**. The periphery inlet **6** is closed. The compressed water exerts a thrust when it is exhausted through the pump jet nozzle **8** and ultimately the exhaust nozzle **3**. At low speeds the ram jet **10** is not used and efficient operation of a water craft is obtained. The inflatable section **14** would be inflated through an air inlet line **15**, i.e., the pump jet nozzle would be made narrower during low speed operations, so as to minimize losses, thu making the pump jet **4** more efficient.

For high peed operation the ram jet **10** is put into operation. The pump jet **4** brings the flow of water up to a speed where the ram jet **10** is self sustaining. The ram jet imparts added thrust to the water entering its entrance vane **9** by adding gas, air or steam bubbles to the water in the fuel injection chamber **11**. Any usual method of adding the bubbles to the water would be suitable. For example, high pressure air could be admitted to the water through fuel line **12**. The air bubbles would expand and create great thrust out the exhaust nozzle **3**.

Another source of bubbles would be a boiling water reactor **13** which would boil the water in the fuel injection chamber **11**. The resulting steam bubbles would give the added thrust.

Another alternative would be the use of water reacting fuels of any known type. For example the fuels described in U.S. Patents 2,461,797; 2,914,913 and 2,974,626 could be used.

Combustion gases could also be used as a source of bubbles and would enter the fuel injection chamber through the fuel line **12**.

When the ram jet **10** is put into operation the pump jet may be partially or completely bypassed by feathering the propellers, opening the periphery inlet or a combination of the two; this feature could be used to change the character of self noise generated by the unit if it became necessary in a particular application. To obtain extremely high speed it would be necessary to bypass the pump jet. The periphery inlet plates **18** open against a spring **17** by action of passing water against a projected lip area **26** which is placed in the water stream. The area of the lips will determine when each inlet plate opens. If desirable, mechanical means (FIG. 3) by use of a sliding sleeve **38** with individual arms **19** attached to the inlet plates **18** could be used to open the inlets as shown in FIG. 3 wherein the arms **19** attached to the sleeve **38** move away from the inlets **6** to pull the inlet plates **18** open when the sleeve moves away from the inlets. It is to be understood that though the sleeve **38** is shown in FIG. 3 to be exterior to the outer shell **1** it could be within the outer shell **1**. Likewise, plates **18** could open inwardly of the outer shell **1**.

Referring to FIG. 2 there is shown a modified cross section of the jet propulsion unit showing only the periphery inlets **6** and inlet plates **18** hinged **17** to the outer shell **1**.

Referring to FIG. 2*a* there is shown a periphery inlet **6** with an associated inlet plate **18** and lip area **26** hinged **17** to the outer shell **1**.

Referring to FIG. 4 there is shown a ship **20** that is propelled by a water jet propulsion unit described herein. The outer shell **1** of the propulsion unit is shown along with the pump jet drive shaft **16**. The fuel line and air line (not shown) enter the propulsion unit by running along the outer shell or along the supports **25**. The propulsion unit may be more forward or aft of the ship than shown in the drawing.

Referring to FIG. 5 there is shown a hydrofoil craft 21 with forward and aft hydrofoils 27 and 28 respectively. The water jet propulsion unit with only the outer shell shown is attached to the aft hydrofoil 28. The pump jet drive shaft in this embodiment is more vertical than in FIG. 4. The power from the drive shaft 16 is transferred to the pump jet in any conventional manner. The hydrofoil and attached propulsion are secured to the hydrofoil craft 21 by supports 25.

FIG. 6 is rear or aft view of the hydrofoil craft shown in FIG. 5 showing the outer shell 1 of the propulsion unit and its relation with the hydrofoil 28.

FIG. 7 shows the use of more than one water jet propulsion unit. The outer shells 1 of two units are shown. Any balanced combination of units could be used.

Although I have shown and described in specific terms preferred embodiments of my invention, it should be understood that the invention is not limited to the particular embodiments shown. Other embodiments may suggest themselves in respect to particular circumstances without departing from the spirit and scope of this invention. It is intended that this invention will be limited only in accordance with the appended claims.

I claim:

1. A propulsion device for operation in water comprising:
- a hollow stream-lined body member having an inlet nozzle and an exit nozzle;
- a first chamber within said body adjacent said inlet nozzle;
- a pump jet mounted within said first chamber;
- means connected to said pump jet for driving the said pump jet;
- a second chamber within said body adjacent said exit nozzle;
- an axially aligned venturi extending between said first and said second chambers;
- means for varying the cross sectional area of the said venturi whereby the throat of the venturi is made smaller to make the system more efficient at slow speeds;
- means within said second chamber for imparting energy to the water passing through said body; and
- means to selectively provide a water bypass for said pump jet;
- whereby said device may be converted from operation as a low speed jet to operation as a ram jet.

2. A propulsion device for operation in water comprising:
- a hollow stream-lined body member having an inlet nozzle and an exit nozzle;
- a first chamber within said body adjacent said inlet nozzle;
- a pump jet mounted within said first chamber;
- means connected to said pump jet for driving the said pump jet;
- a second chamber within said body adjacent said exit nozzle;
- an axially aligned venturi extending between said first and said second chambers;
- means within said second chamber for inparting energy to the water passing through said body; and
- means to selectively provide a water bypass for said pump jet;
- said means for bypassing the said pump jet comprises flap covered apertures in the said stream-lined body, said flaps being exteriorly hinged and having an upturned lip that acts against the water stream whereby the force of the water at high velocity opens the flaps to bypass the pump jet and convert the propulsion device to a ram jet;
- whereby said device may be converted from operation as a low speed jet to operation as a ram jet.

3. A propulsion device for operation in water comprising:

- a hollow stream-lined body member having an inlet nozzle and an exit nozzle;
- a first chamber within said body adjacent said inlet nozzle;
- a pump jet mounted within said first chamber;
- means connected to said pump jet for driving the said pump jet;
- a second chamber within said body adjacent said exit nozzle;
- an axially aligned venturi extending between said first and said second chambers;
- means within said second chamber for imparting energy to the water passing through said body; and
- means to selectively provide a water bypass for said pump jet;
- said pump jet bypass means comprises
- a multitude of openings, said openings being covered by flaps exteriorly hinged to the said stream-lined body member, said flaps being controlled by individual arms attached to a sliding sleeve whereby movement of the said sleeve control the position of the said flap;
- whereby said device may be converted from operation as a low speed jet to operation as a ram jet.

4. In a propulsion device according to claim 3 in which the energy imparting means in the second chamber comprises high pressure gas.

5. In a propulsion device according to claim 3 wherein the energy imparting means in the said second chamber comprises water reacting fuel that enters the said second chamber through a fuel line.

6. A liquid jet powerplant for driving a vessel thru sea water, comprising:
- an elongated hollow body of varying interior longitudinal cross section having an inlet end and an opposing exhaust end;
- a turbine liquid pump stage mounted in the inlet end;
- a source of power for driving said pump to establish a flow of water thru said body at sufficient velocity to initiate movement of the vessel thru water;
- said hollow body having in its central portion a plurality of peripherally spaced apertures located in the walls thereof, whereby free liquid communication is provided between the external sea water and the interior of said hollow body in a region aft of said turbine pump;
- a plurality of flaps, one flap for each said aperture, mounted on the outer surface of said body;
- an essentially tangentially oriented hinge for each of said flaps located on said body; and
- means attached to each of said flaps whereby said flaps are movable in unison to close said apertures and are movable to an extended position at an attack angle to the sea water slipstream to thereby direct sea water thru said apertures and into the hollow body in an aftward direction;
- a venturi section located in the after portion of said hollow body in direct flow liquid communication with both said inlet and exhaust ends and said apertures;
- flexible wall means positioned in the throat of the venturi for varying the transverse cross sectional area of the throat;
- whereby when the vessel is operating at relatively low speeds, the throat of said venturi section is varied to provide a constricted liquid flow;
- a combustion chamber located aftwardly of the throat of said venturi section;
- feed means extending into said combustion chamber for feeding heat producing fuel thereinto, whereby the heat content of the water flowing into said combustion chamber is raised substantially above that of the ambient sea water;
- said powerplant being operable as a ram jet upon opening of said flaps and de-energization of said power source, when the velocity of the vessel reaches a pre-

determined value, whereby the throat of said venturi section is adjustable to enable larger volumes of water flow there thru to said heat producing combustion chamber.

References Cited by the Examiner

UNITED STATES PATENTS

2,696,077	12/54	Goodman.	
2,896,408	7/59	O'Donnell	60—35.6 X
2,914,913	12/59	Zwicky	115—11 X
2,995,893	8/61	Morris et al.	60—35.6

3,013,384	12/61	Smith	60—35.5
3,016,694	1/62	Howarth et. al.	
3,040,516	6/62	Brees	60—35.6 X
3,048,140	8/62	Davis.	
3,122,881	3/64	Walker	60—35.5

OTHER REFERENCES

Gongwer, C. A.: Some Aspects of Underwater Jet Propulsion Systems, in ARS Journal, December 1960, page 1149.

SAMUEL LEVINE, *Primary Examiner.*