Dec. 22, 1925. 1,566,603

E. B. HUBER

DROP HAMMER GUIDE AND ADJUSTMENT

Filed May 24, 1920 3 Sheets-Sheet 1

Fig. 2.

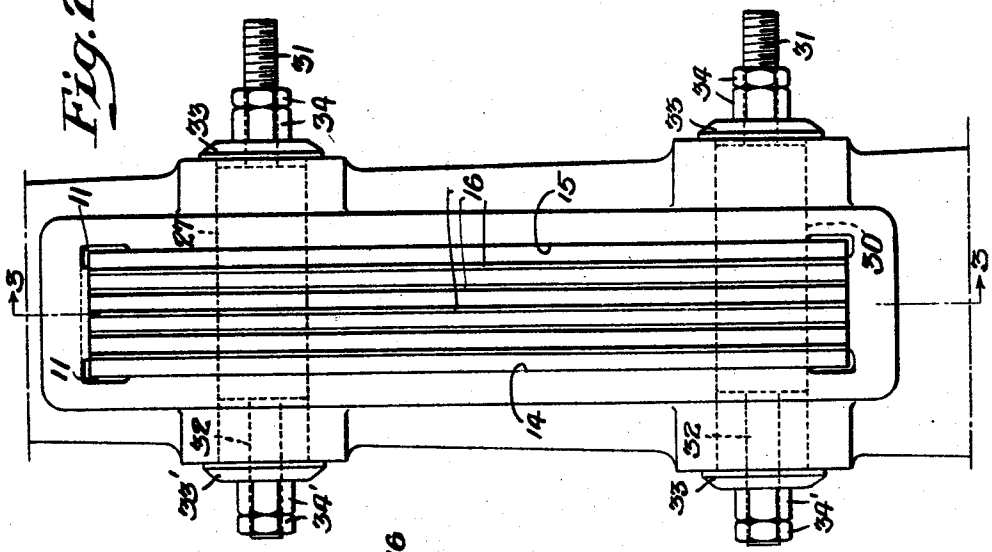

Fig. 6.

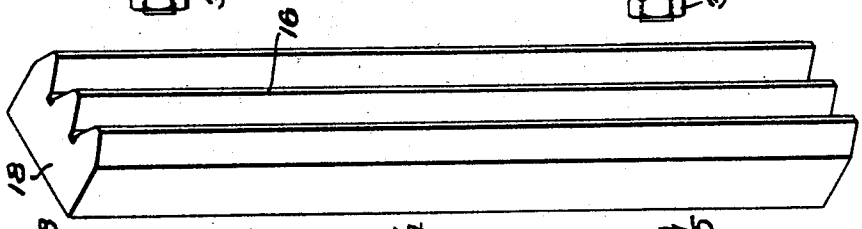

Fig. 1.

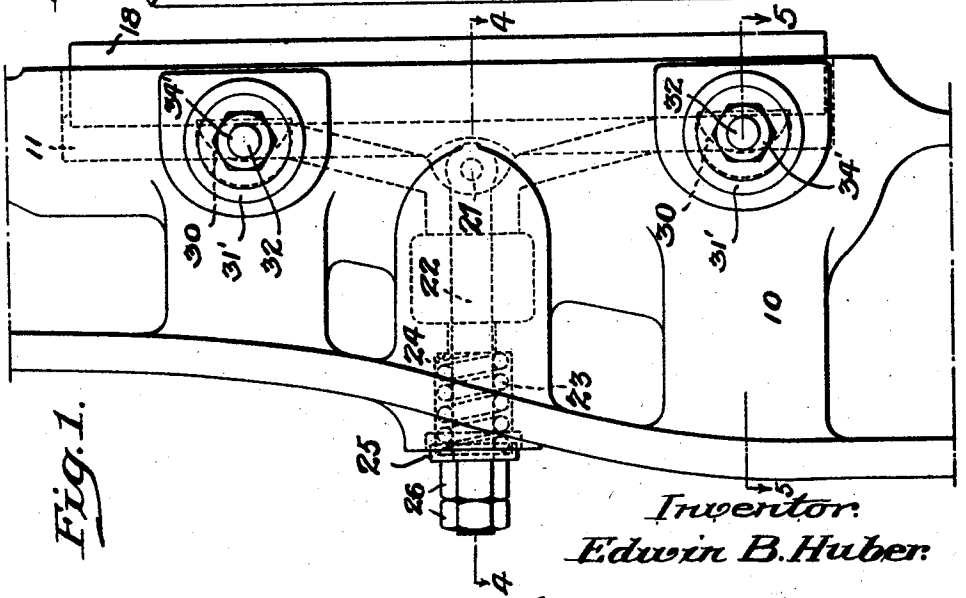

Inventor:
Edwin B. Huber.
by W. Stull Jackson.
Attorney.

Dec. 22, 1925. 1,566,603

E. B. HUBER

DROP HAMMER GUIDE AND ADJUSTMENT

Filed May 24, 1920 3 Sheets-Sheet 2

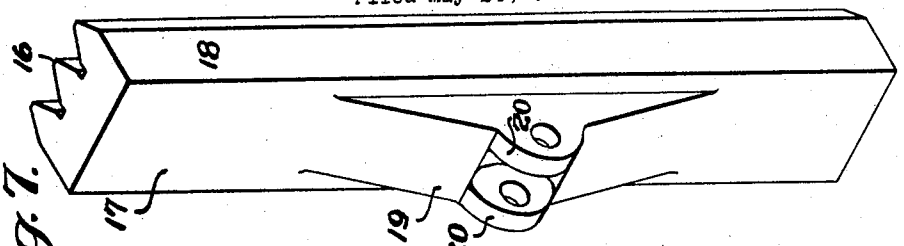

Fig. 7.

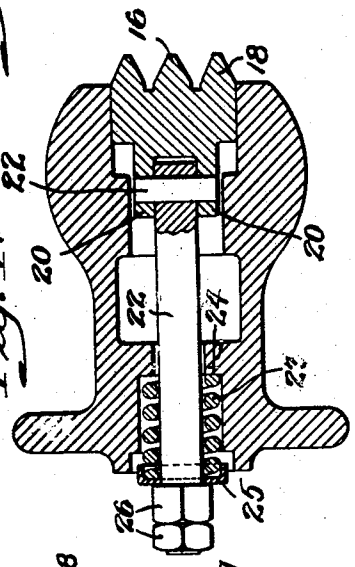

Fig. 4.

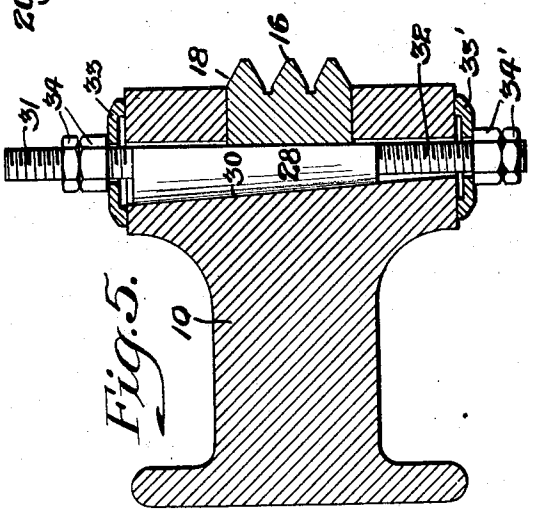

Fig. 5.

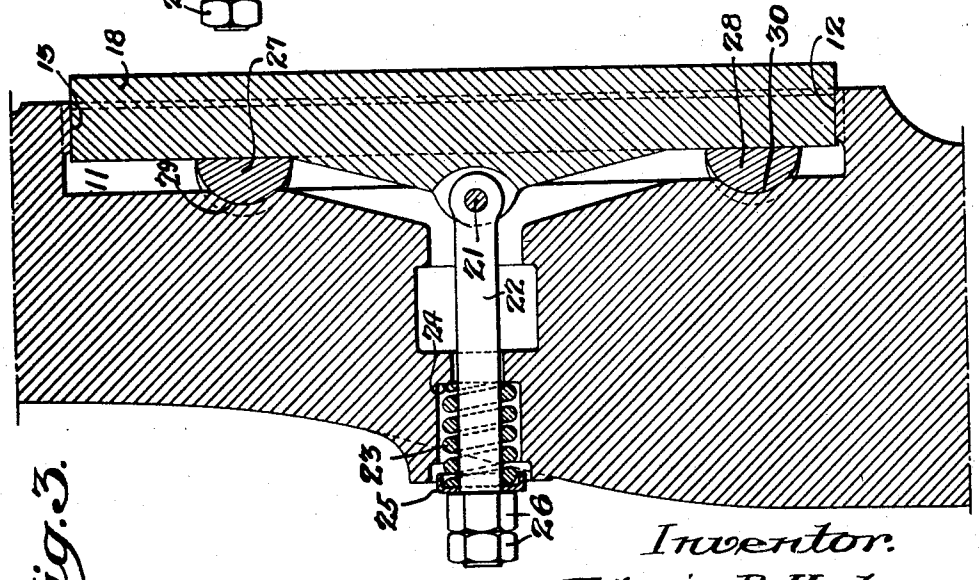

Fig. 3.

Inventor.
Edwin B. Huber.
by C. Steell Jackson
Attorney.

Dec. 22, 1925. 1,566,603

E. B. HUBER

DROP HAMMER GUIDE AND ADJUSTMENT

Filed May 24, 1920 3 Sheets-Sheet 3

Fig. 8.

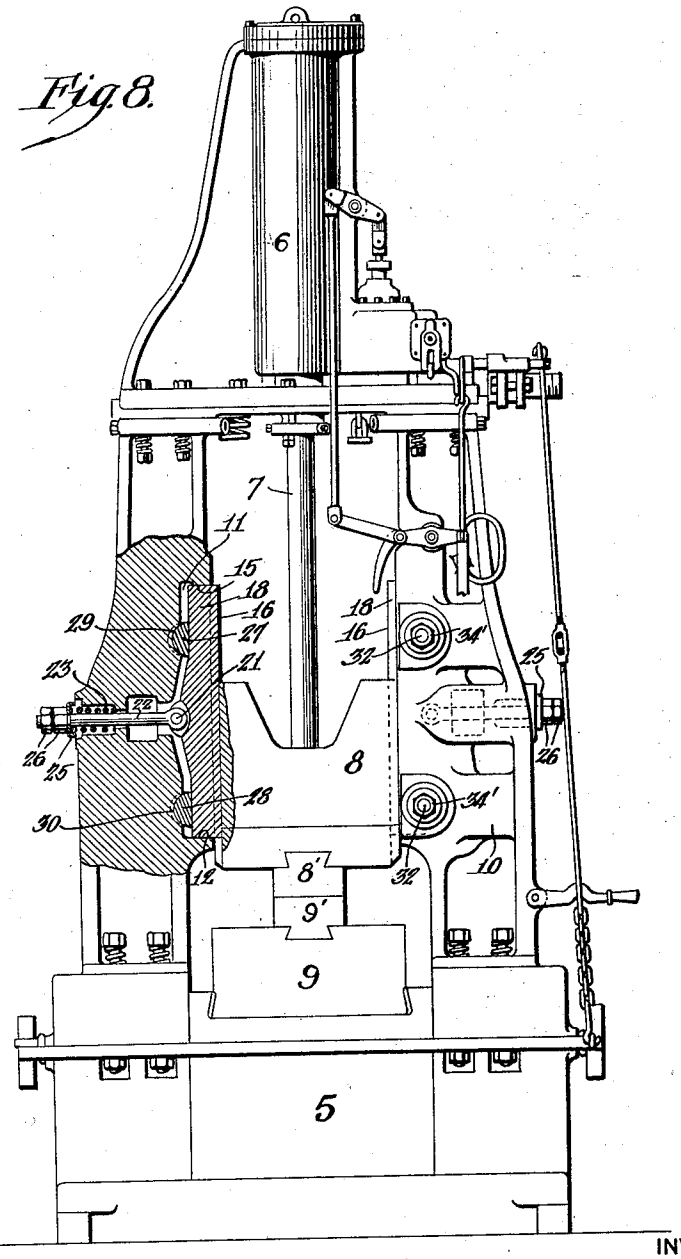

INVENTOR:

Edwin B. Huber

BY

W. Steel Jackson

ATTORNEY.

Patented Dec. 22, 1925. 1,566,603

UNITED STATES PATENT OFFICE.

EDWIN B. HUBER, OF CHAMBERSBURG, PENNSYLVANIA, ASSIGNOR TO CHAMBERSBURG ENGINEERING COMPANY, OF CHAMBERSBURG, PENNSYLVANIA, A CORPORATION OF PENNSYLVANIA.

DROP-HAMMER GUIDE AND ADJUSTMENT.

Application filed May 24, 1920. Serial No. 383,610.

To all whom it may concern:

Be it known that I, EDWIN B. HUBER, a citizen of the United States, residing at 232 S. Main St., Chambersburg, in the county of Franklin and State of Pennsylvania, have invented a certain new and useful Drop-Hammer Guide and Adjustment, of which the following is a specification.

My invention relates to drop hammer guides which are adjustable to take up wear caused by operation of the hammer.

The purposes of my invention are to provide separate adjustments for the top and bottom, so as to take up wear which is not equal at the two ends; to relieve the take-up devices of direct strain upon the adjusting mechanism, to facilitate withdrawal of the guides into pockets within the frames for the purpose of permitting removal of the operating head; to afford beam reinforcement of the guides; to utilize this reinforcement for hinged connection of retaining mechanism; and to seat the guide upon the frame at the bottom of the pocket so as to support its weight at this point; all in the various combinations more fully specified in the claims.

I have preferred to illustrate my invention by but one form, selecting a form which is practical, efficient, convenient and inexpensive and which at the same time well illustrates the principles of my invention.

Figure 1 is a partial side elevation of one side frame structure and guide illustrating the preferred form of my invention.

Figure 2 is a front face elevation of a guide in position as seen in Figure 1.

Figure 3 is a section upon line 3—3 of Figure 2.

Figures 4 and 5 are sections upon line 4—4 and 5—5 in Figure 1.

Figures 6 and 7 are perspectives of the guide from different positions.

Figure 8 is a side elevation partly broken away to show a section of that portion of the drop hammer to which my invention is applied.

In the drawings similar numerals indicate like parts.

My invention is suited to use in steam, air and board drop hammers and is particularly suited to use in these hammers or hammers of whatever name when intended to be used for matched die work in the manufacture of stampings, drop forgings etc.

As the two frame members of the drop hammer are opposite counterparts of each other and the two guides and their connections and adjustments are exact duplicates, I have illustrated and shall describe but one frame member and its guide equipment.

The general drop hammer structure is shown in Figure 8 as embodying the base 5, side frame members, cylinder 6, plunger 7, reciprocating head 8 with its upper die 8′ and lower die holder 9 with the lower die 9′, with old operating and controlling mechanism which has no part in the invention and which need not be described further than to explain that the illustration follows Figure 1 of Derbyshire Patent No. 1,100,289 to which patent reference is made for further detail as to the other structure outside of the present invention.

The drop hammer frame 10 is recessed at 11 to form a pocket which is cored out initially and is planed to provide top and bottom facing end surfaces 12, 13 and facing side surfaces 14, 15. The sides and ends as well as front 16 and back at 17 of the guide 18 are finished and the guide fits snugly within the finished portion of the seat and rests upon the bottom face 12. The front 16 is ribbed to cooperate with a ribbed head as is common with such guides. The pocket is deep enough to accommodate a beam reinforcement 19 upon the back of the guide. The beam carries ears 20 for a pin 21 providing the pivot pin for a retaining bolt 22. A spring 23 resting upon shoulder 24 at the inner end and against washer 25 suitably retained as by nuts 26, holds the guide in position against the adjusting mechanism firmly and yet with sufficient resilience to avoid excessive strain.

Rear support of the guide is provided at two spaced points by means of transversely directed wedges 27, 28, having curved backs 29, 30 and preferably having the taper wholly at the back so as to provide flat front faces supporting the flat back portion 17 of the guide.

These wedges pass completely through the frame and are provided with threaded

extensions 31, 32 at the two ends for any suitable washer 33 or 33′ and locked holding mechanism such as is shown at 34, 34′.

By reason of the spacing of these wedges the unequal wear upon the guides, greatest at the bottom, may be accommodated through corresponding partial tilting of the guide without reducing the firmness of support nor the entire control by the adjusting mechanism at all times. This tilting is accommodated by the curvature of the back of each wedge which allows it to turn in agreement with the tilting of the guide and by the pivotal connection with bolt 22.

The depth of the recess provided is sufficient for the guide to enter it completely, leaving the full width between the two side frame members for lateral removal of the head and die, and the guide can be drawn into the recess quickly and without change of setting of the adjusting mechanism by merely releasing the lock nuts or other retaining devices by which the bolt 28 is held in tightened position and removing the nuts 34′ and washer 33′.

The release of these nuts at the small end of the wedge permits withdrawal of the adjusting mechanism by hand without altering the set of the nuts 34, permitting the parts to be put together in the same position and with a minimum of labor.

Because the movement of the adjusting wedges is transverse to the length of the guides and the taper of the wedges need not be steep, there is no strain upon the nuts 34, 34′ except such as is required to prevent them from jarring loose and the loosening of the nuts is not hastened by any direct strain from pressure against the face of the guides.

Adjustments can be made with great nicety with the mechanism shown, making this invention, as indicated, particularly suitable for use in matched die work. The horizontal wedge support and adjustment cooperates with the extra recessing of the pocket to give a much quicker housing of the guide within the pocket for removal of the head and avoids the objection present with release of threaded stops which have borne the impact of the side component of the hammering pressure directly upon the threads.

It will be evident that various changes may be made in the application and combination of the various parts of my invention to suit the whim of the designer or the needs of the installation, without departing from the spirit and scope of my invention as defined in the claims.

Having thus described my invention, what I claim as new and desire to secure by Letters Patent is:—

1. In a guide for drop hammers, a drop hammer side frame having a pocket, a guide adapted to fit in the pocket, a retaining device for the guide pivotally connected therewith and independent adjusting means for upper and lower parts of the guide to adjust it, and capable of rocking it upon the pivot of the retaining device.

2. In a guide for drop hammers, a drop hammer side frame having a pocket, a guide adapted to lie wholly within the pocket or to project therefrom for guiding purposes, a longitudinal beam reinforcement for the back of the guide, a retaining device for the guide secured to the reinforcement and independent transversely movable and removable adjusting means for the upper and lower parts of the guide.

3. In a guide for drop hammers, a drop hammer side frame having a pocket, a guide withdrawable into the pocket, a retaining device movably connected with said guide and independent wedge adjustments for the upper and lower parts of the guide, transversely movable with respect to the guide for effecting the adjustment.

4. The combination in a steam hammer, of a standard; a guide pivotally mounted on the standard; a hammer head; means for reciprocating the head; a wedge located back of each end of a guide; and means for adjusting the wedges.

EDWIN B. HUBER.