D. E. CRIPE.

Mechanical Movement.

No. 210,014. Patented Nov. 19, 1878.

Fig: 1.

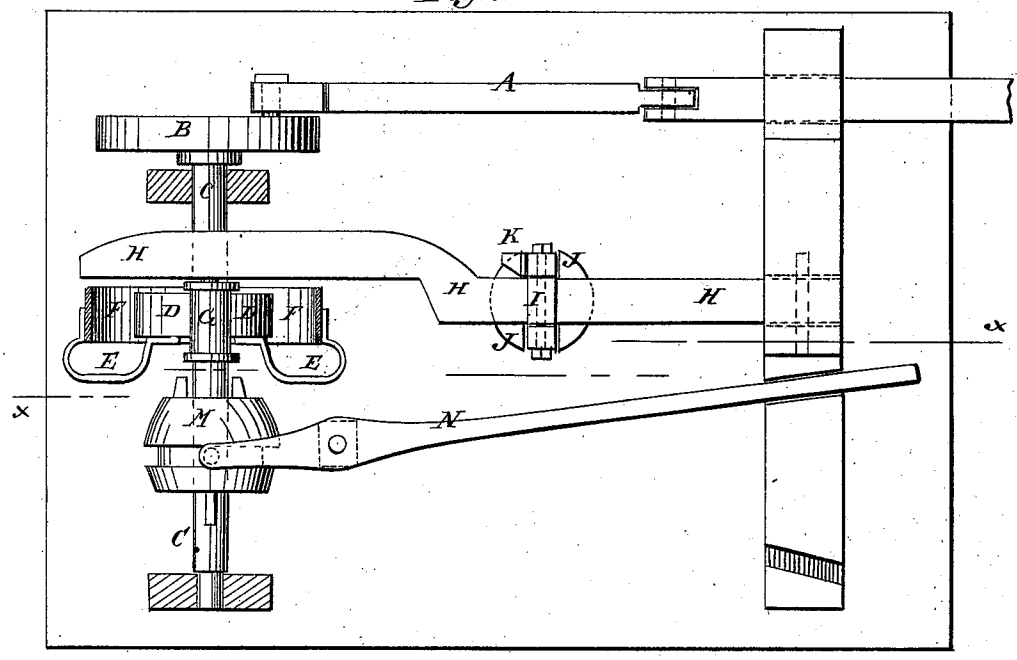

Fig: 2.

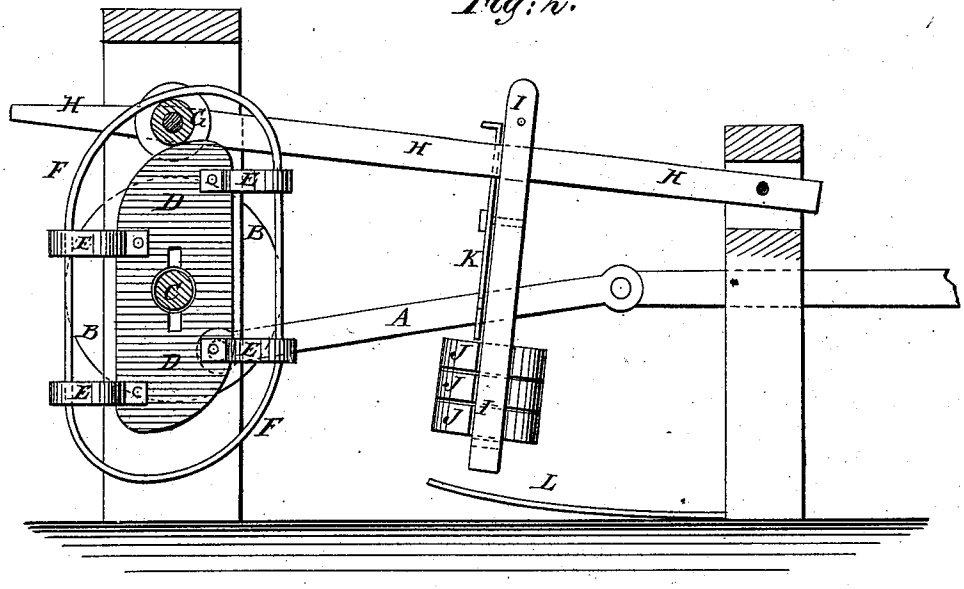

WITNESSES:

Chas. Nida.

C. Sedgwick

INVENTOR:

D. E. Cripe

BY Munn & Co

ATTORNEYS.

N. PETERS, PHOTO-LITHOGRAPHER, WASHINGTON, D. C.

UNITED STATES PATENT OFFICE.

DAVID E. CRIPE, OF NORTH MANCHESTER, INDIANA.

IMPROVEMENT IN MECHANICAL MOVEMENTS.

Specification forming part of Letters Patent No. **210,014**, dated November 19, 1878; application filed October 15, 1878.

To all whom it may concern:

Be it known that I, DAVID ELDON CRIPE, of North Manchester, in the county of Wabash and State of Indiana, have invented a new and useful Improvement in Devices for Overcoming Dead-Centers, of which the following is a specification:

Figure 1 is a top view of my improved device, shown as applied to a crank-shaft, and part being broken away to show the construction. Fig. 2 is a side view of the same, partly in section through the line *x x*, Fig. 1, to show the construction.

Similar letters of reference indicate corresponding parts.

The object of this invention is to furnish an improved device for use upon all machinery where a rectilinear motion is converted into a rotary motion, to prevent the machinery from stopping with its crank upon a dead-center, so that the machinery can always be started by the movement of the driving-pitman.

The invention consists in the combination of the cam-shaped block, the roller, the lever, and the adjustable weighted frame with the shaft, the crank-wheel or crank, and the driving-pitman; in the combination of the spring with the weighted frame, the lever, the roller, the block, and the shaft; in the combination of the bent arms and the guard-band with the block attached to the shaft and with the roller pivoted to the weighted lever; and in the combination of the clutch and the clutch-lever with the shaft and the block upon which the roller of the weighted lever works, as hereinafter fully described.

A represents the driving-pitman, which may receive motion from a steam-engine, a wind-wheel, a treadle-power, or any other power, and which is pivoted to a crank or crank-wheel, B. The crank or crank-wheel B is attached to the end of the shaft C, from which motion is communicated to the machinery to be driven, in the usual way. Upon the shaft C is placed an oblong block, D, the alternate angles of the ends of which are rounded off into cam shape, as shown in Fig. 2.

To one side of the block D are attached the inner ends of a number of U-shaped arms, E, to the outer ends of which is attached a band, F, of the same general form as the block D, and of such a size as to leave between it and the said block a sufficient space to receive the roller G, which is pivoted to the end of a lever, H. The other end of the lever H is hinged to a post or other suitable support, and from the said lever is suspended a frame, I. The frame I is adjustable, so that it may be moved toward or from the free end of the said lever, and is provided with detachable weights J, which may be increased or diminished, as required, and which are kept in place upon the said frame by a locking-slide, *k*.

To the floor or to some other suitable support is attached one end of a spring, L, so that the said spring may receive the lower end of the weighted frame I, and support it and the lever H when the block D is thrown out of gear with the shaft C, to prevent the said frame and lever from hanging upon the shaft C and retarding its motion.

The block D is connected with the shaft C, so as to be carried around by and with the said shaft in its revolution, by the sliding clutch M, the hub of which has a ring-groove formed in it to receive the end of the lever N, or a pin attached to the said end, so that the said clutch may be thrown into and out of gear with the said block D by operating the said lever N. The lever N is pivoted to a post or other suitable support.

The roller G is pivoted to the lever H in such a position as to be directly over the shaft C, and the block D is secured to the shaft C in such a position that the roller G will pass the outer ends or angles of the block as the pitman A approaches the dead-points of its crank, so that it will be carried past the said dead-points by the downward pressure of the said roller G upon the inclined side of the block D.

In the case of powers that move very slowly, the guard-band F need not be used, as the roller G will have no tendency to jump, and the clutch M N will not be required, as there will be no necessity for throwing the block D out of gear. The block D need be thrown out of gear only when the machinery is running with a rapid motion, so as to have sufficient momentum to carry the crank past its dead-points.

Having thus described my invention, I claim as new and desire to secure by Letters Patent—

1. The combination of the cam-shaped block D, the roller G, the lever H, and the adjustable weighted frame I J with the shaft C, the crank-wheel or crank B, and the driving-pitman A, substantially as herein shown and described.

2. The combination of the spring L with the weighted frame I J, the lever H, the roller G, the block D, and the shaft C, substantially as herein shown and described.

3. The combination of the bent arms E and the guard-band F with the block D, attached to the shaft C, and with the roller G, pivoted to the weighted lever H, substantially as herein shown and described.

4. The combination of the clutch M and the clutch-lever N with the shaft C and the block D, upon which the roller G of the weighted lever H works, substantially as herein shown and described.

DAVID E. CRIPE.

Witnesses:
JOSEPH B. HARTER,
JACOB HARTER.