Nov. 15, 1949 W. A. ABEGG 2,488,107

DRILL PIPE SPINNING DEVICE

Filed Aug. 17, 1945 2 Sheets-Sheet 1

Fig. 1.

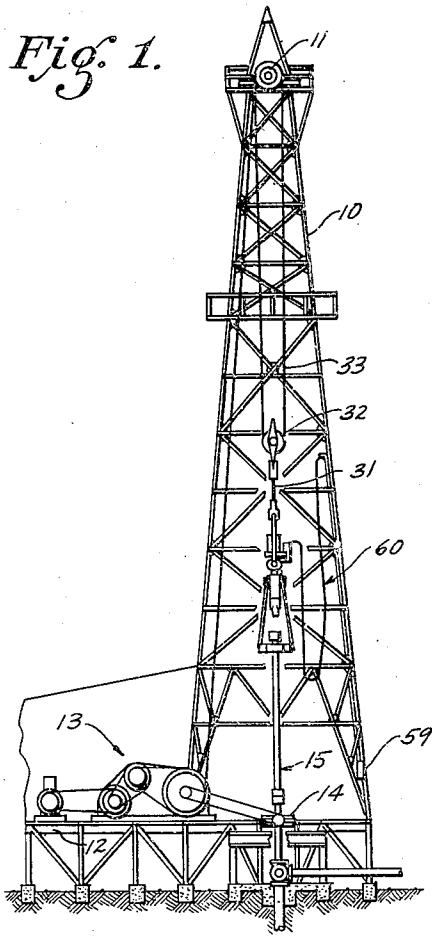

Fig. 4

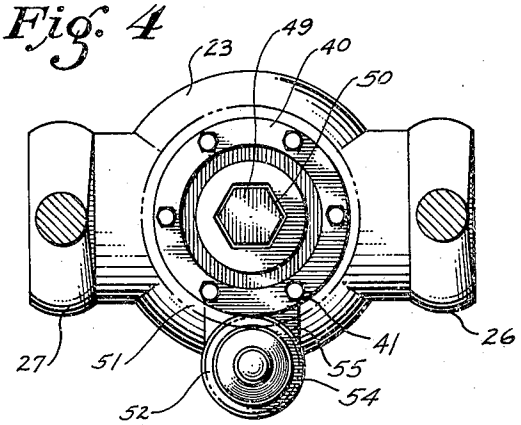

Fig. 5

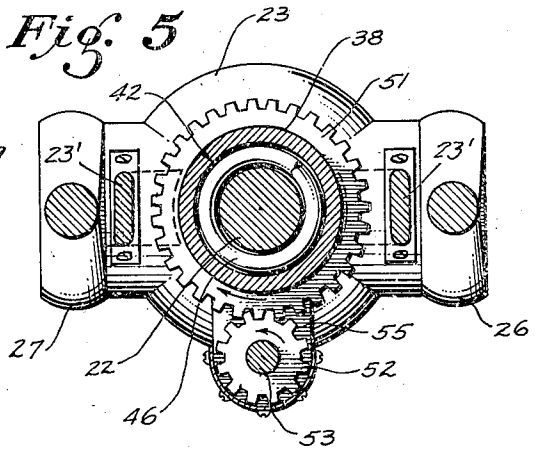

INVENTOR.
WALTER A. ABEGG
BY James W. Abbett
ATTORNEY

Nov. 15, 1949 W. A. ABEGG 2,488,107

DRILL PIPE SPINNING DEVICE

Filed Aug. 17, 1945 2 Sheets-Sheet 2

Fig. 2

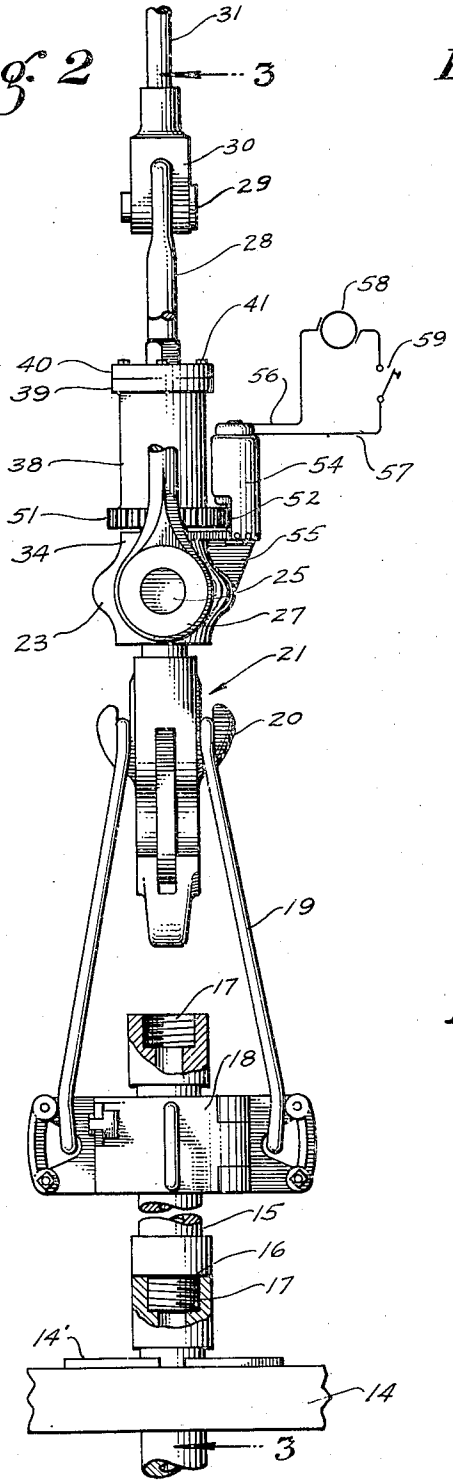

Fig. 3

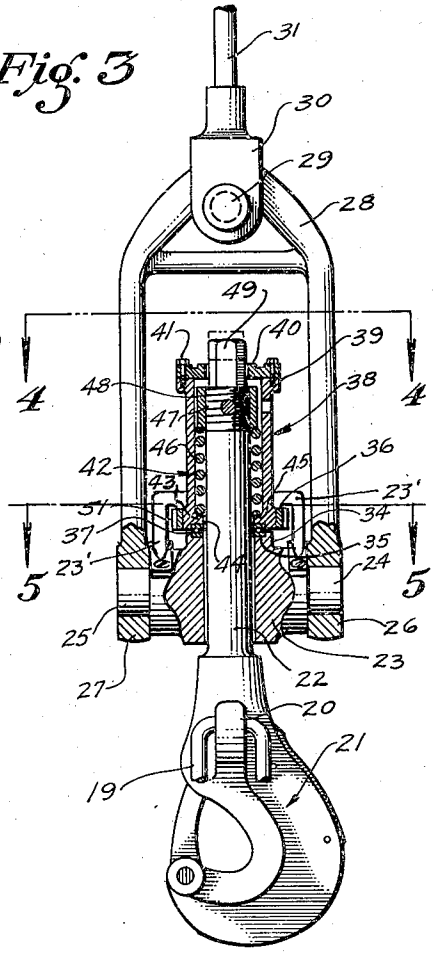

Fig. 6

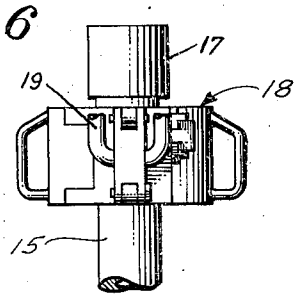

INVENTOR.
WALTER A. ABEGG
BY James M. Abbett
ATTORNEY

Patented Nov. 15, 1949 2,488,107

UNITED STATES PATENT OFFICE

2,488,107

DRILL PIPE SPINNING DEVICE

Walter A. Abegg, Los Angeles, Calif., assignor to Abegg & Reinhold Company, Ltd., Los Angeles, Calif., a corporation of California

Application August 17, 1945, Serial No. 611,208

4 Claims. (Cl. 255—35)

1

This invention relates to oil well drilling equipment, and particularly pertains to drill pipe spinning devices, and is a continuation in part of my application entitled "Drill pipe spinning device," Serial No. 497,145, filed by me July 31, 1943, now abandoned.

In well drilling operations it is common practice to lower a sectional drill string through the rotary table of a well derrick into the well for drilling operations. This drill string comprises a plurality of lengths or "stands" of pipe which are connected together by threaded tool joints. The tool joints comprise a box section which is presented with its open mouth extending upwardly to receive a threaded pin section which occurs at the lower end of a stand of pipe being supported from the traveling block and elevator of the drilling rig. The initial operation of threading the male and female tool joint sections together is usually referred to as a "spinning" operation. This is followed by a final operation referred to as "making or setting up the joint," and the initial unthreading operation is usually referred to as "breaking the joint." This is followed by a "spinning" operation to unscrew the thread completely. The spinning operation is usually performed by applying pipe tongs to the section of drill string suspended in the well and which carries the box section at its upper end. At the same time the section of drill pipe which is being connected to or disconnected from the main length of pipe in the well is spun by a spinning line. This operation is performed by two members of the drilling crew, one who operates the hoisting engine while the other manipulates the spinning line. One end of the line is led around the cat-head of the driving unit while the other end is wrapped around the upper length of pipe which is supported by the elevator. In applying the line to the pipe it is wrapped around the pipe for several convolutions and the operator holds onto the free end of the line, while the opposite end of the line is being wound onto the cat-head. He thus controls the amount of friction exerted by the convolutions of the line upon the stand of pipe, and thereby causes the stand of pipe to spin until the pin is threaded completely into the box. The spinning operation is quite hazardous since sometimes the operator has his hand caught in the line, or an operator on the derrick floor may become entangled in the line. After the spinning rope is removed pipe tongs are applied to both sections of the string of pipe to impart additional torque so that the tool joint will be "set up."

2

In this operation abutting shoulders upon the box and pin are drawn together tightly so that they bind and hold the joint firmly assembled in a manner to prevent accidental unscrewing of the pin from the box. It will be recognized that during the spinning operation the spinning line is led across and above the derrick floor to the cat-head. This causes a large amount of the space on the floor of a drilling rig to be occupied, which reduces the efficiency in drilling operations. The operation also requires considerable time. It is desirable, therefore, to provide means for rapidly and safely spinning drill pipe preparatory to setting tool joints or in breaking and disconnecting tool joints which will eliminate the use of rope for spinning operations, and will render the floor of the derrick clear, while insuring that the spinning operations may be performed conveniently and rapidly, and without danger to the drilling crew. It is the principal object of the present invention, therefore, to provide power means for rotating the sections of a drill string to spin the drill pipe sections, and which means are always clear of the derrick floor and may be operated from a remote point in a manner to reduce the number of men in the drilling crew to a minimum.

The present invention contemplates the construction of a drilling hook upon which a section of drill pipe is supported by an elevator and with which hook a power unit is associated by which the vertical spindle of the hook may be rotated in either direction to impart rotation to the hook and elevator, whereby a desired power spinning action may be imparted to the drill string section to thread the pin and box sections of a tool joint with relation to each other, while the spinning operation is controlled from a remote point.

The invention is illustrated by way of example in the accompanying drawings in which:

Figure 1 is a view in elevation showing the application of the present invention to an ordinary well derrick and well rig.

Fig. 2 is an enlarged fragmentary view in side elevation showing the construction of the hook and elevator, and indicating the application of a power spinning unit thereto.

Fig. 3 is a view in section and elevation with parts broken away, as seen on the line 3—3 of Fig. 2, and discloses particularly the construction of the hook bail and the manner in which the hook is supported therefrom.

Fig. 4 is a plan view in section and elevation as seen on the line 4—4 of Fig. 3, and shows the relationship of the spinning unit thereto.

Fig. 5 is a plan view in section and elevation, as seen on the line 5—5 of Fig. 3, and shows the power driving arrangement provided to impart spinning action to the hook.

Fig. 6 is a fragmentary view in side elevation showing the elevator structure as applied to the drill pipe.

Referring more particularly to the drawings, 10 indicates an oil well derrick, fitted at its upper end with the usual crown block 11 and provided with a derrick floor 12 upon which a power unit 13 is mounted. Suitably positioned upon the derrick floor is a rotary table 14 through which a string of drill pipe 15 extends. This drill pipe is formed in sections at the opposite ends of which are a threaded pin 16 and a threaded box 17 by which contiguous ends of the pipe may be assembled. The upper drill pipe section is fitted with a suitable type of elevator 18 by which the section may be raised and lowered. The elevator is fitted with bails 19 which are here shown as engaging hook-shaped lugs 20 formed as a part of the body of a drilling hook, generally indicated at 21. The upper end of the drilling hook, as disclosed particularly in Fig. 3 of the drawings, is formed with a cylindrical vertical shank 22. This shank extends through a trunnion block 23, which is formed at diametrically opposite sides with trunnions 24 and 25. The trunnions extend into openings in bearing portions 26 and 27, which are formed at the lower ends of the arms of a bail 28. The loop of the bail receives a yoke pin 29 which extends through a bail yoke 30. The bail yoke receives the free end of a cable 31. This cable is attached to a traveling block 32 supported upon the main cable 33 of the derrick. The cable 33 is led over the crown block 11 and the live end of it is connected to a hoisting drum of the power plant 13 while the dead end is fastened in a desired conventional manner.

The upper end of the trunnion block 23 is formed with an upwardly extending cylindrical portion 34, the horizontal face of which provides a mounting for a ball race 35. Above this ball race is a complementary ball race 36 and between the two races are anti-friction bearing elements 37. The ball race 36 is mounted in the lower face of a spring housing 38. The spring housing 38 is cylindrical and is here shown as formed at its upper end with a horizontal bolting flange 39 which receives an end cap 40. The cap is secured in position by cap screws 41 and closes the upper end of the housing 38. The housing is formed with an inner cylindrical bore 42 which terminates in an inturned flange 43 at its lower end. A reduced bore 44 is formed through the flange and accommodates the shank 22 with a sliding fit. The upper face of the flange 43 provides a shoulder 45 upon which a hook support spring 46 is seated within the bore 42. This spring is helical in form. The upper end of the shank 22 is formed with a cylindrical threaded section 47 which receives a shank nut 48. The nut provides a shoulder resting against the upper end of the spring 46. Extending upwardly from the threaded portion 47 of the shank is a spline section 49 which is formed integral with the shank. This section is here shown as being hexagonal in cross-section and extends through a hexagonal opening 50 in the cap 40 of the spring housing 38. Due to this arrangement the spring housing 38 and the shank 22 are permitted to have relative longitudinal movement as produced by variation in load imposed upon the hook 21 but they are held against relative rotation. The

spring housing 38 and the shank 22 are splined together so that the shank may be driven to rotate around its longitudinal axis when the housing 38 rotates. The housing 38 is fitted with a gear 51, here shown as being of the spur type and mounted upon or formed integral with the lower edge of the housing. This gear meshes with a driving pinion 52 carried upon a drive shaft 53. The drive shaft 53 is parallel to the shank 22 and may be the armature shaft of an electric driving motor 54. The driving motor is mounted upon a bracket 55 which is carried by the trunnion block 23. Electric conductors 56 and 57 are connected to the motor 54 and led to a source of electric energy, such for example as the generator 58. At a point in the line of said conductors a control switch 59 is mounted. This switch is provided to control the flow of electric current from the source of energy 58 to the motor 54 and to determine the direction of flow so that the motor may impart a driving motion to the housing 38 in a clockwise or counter-clockwise direction. It should be pointed out that the conductors 56 and 57 are embodied within a flexible cable 60 which is led upwardly to a point of support within the derrick 10, and the free end of which is led to the motor 54. This length of cable is sufficient to allow the drilling hook to be raised and lowered within the derrick as desired in order to accommodate the drill pipe sections which are being handled by it. The switch 59 is supported at a point where it may be reached conveniently by an operator standing on the derrick floor. Thus, the spinning device may be controlled remotely regardless of the height at which it is supported in the derrick.

In operation of the present invention a drilling hook and spinning device are assembled, particularly as shown in Figs. 1 and 2 of the drawing. The hook is fastened to the traveling block 32 by the cable 31 and may be manipulated in the usual manner, since the drilling hook structure is of conventional design and merely has a spinning device incorporated in its construction. When it is desired to add a section of drill pipe to the drill string 15, or to remove a section therefrom, the section is engaged by the elevator 18. The section is then raised so that the pin 16 of the tool joint is in register with the box 17, and with the threads of the pin and box in engagement. The lower drill pipe section is then held against rotation by suitable tongs or by the gripping action of slips 14' on the rotary table 14. The switch 59 is then closed. The motor 54 will then be energized so that the armature shaft 53 and the pinion 52 will be driven. This will impart rotation to the housing 38 through the gear 51. As the housing rotates it will rotate the hook shank 22 through the spline connection provided by the hexagonal section 49 of the shank. Thus, the drill pipe section will be given a spinning action to positively and quickly screw the pin 16 into the box 17 and to set the joint. As the pin is sscrewed into the box the drill string section will of course be drawn downwardly. This movement is accommodated by compression of the helical spring 46. However, during this operation the supporting cable 33 will hold the traveling block 32, the bail 28, and the trunnion block 23 in a set position, and at this time rotation will be imparted continuously from the housing 38 to the shank 22 by the splined connection afforded by the shank section 49. The parts are held in assembled position with relation to the trunnion block 23 by overhanging brackets 23'.

It will thus be seen that there will be no hazard due to the use of a spinning line and no hazard or inconvenience as is usually attendant upon the use of heavy and cumbersome pipe tongs. It will also be noted that the device here provided for imparting a spinning action to a drill pipe section is simple in construction, is not liable to get out of order, and may be operated rapidly and accurately as controlled from the derrick floor.

It should also be pointed out that in well drilling operations, particularly in which the well is driven to a great depth, a great amount of labor is required in running a drill string into a well or withdrawing it therefrom, since each section of a drill string must be separated from or connected to the portion of the drill string in the well. For this reason drilling crews have become quite expert in making and breaking tool joints in an effort to reduce the operating time to a minimum. By the use of the present drill pipe spinning hook this operation may be performed in much less time than has heretofore been possible and with considerably less effort.

While I have shown the preferred form of my invention as now known to me, it will be understood that various changes may be made in combination, construction and arrangement of parts by those skilled in the art, without departing from the spirit of the invention as claimed.

Having thus described my invention, what I claim and desire to secure by Letters Patent is:

1. A spinning swivel hook for well drilling rigs comprising a bail adapted to be supported from a drilling cable, a trunnion block pivoted upon the bail for horizontal swinging movement, a shank extending vertically through said trunnion block and mounted to rotate upon its vertical axis, a hook carried at the lower end of said shank, a housing mounted upon the shank and through which the shank extends, the lower end of said housing resting upon the trunnion block, a shoulder within the housing, a shoulder spaced therefrom on the shank, a resilient element disposed between said shoulders whereby a load supported upon the hook will be imposed upon said resilient member, a splined connection between the housing and the shank whereby the housing and the shank will be held against relative rotation as the shank moves vertically therethrough, a power driving unit supported upon the trunion block, driving means between the driving unit and the housing whereby rotation will be imparted from the driving unit to the shank through the housing to spin the hook.

2. A spinning swivel hook for well drilling rigs to make up and break threaded pipe joints comprising a bail adapted to be supported from a drilling cable, a trunnion block pivoted upon the bail for horizontal swinging movement, a shank extending vertically through said trunion block and mounted to rotate upon its vertical axis, a hook carried at the lower end of said shank, a housing mounted upon the shank and through which the shank extends, the lower end of said housing resting upon the trunnion block, a shoulder within the housing near its lower end, a shoulder spaced therefrom on the shank, a resilient element disposed between said shoulders whereby a load supported upon the hook will be imposed upon said resilient member, a splined connection between the housing and the shank whereby the housing and the shank will be held against relative rotation as the shank moves

vertically therethrough, a driving motor mounted upon the trunnion block, a gear associated therewith, and a gear mounted upon the shank and meshing with the first named gear whereby rotation will be imparted from the driving unit to the circumscribing member to spin the hook.

3. A spinning drilling hook to make up and break threaded pipe joints comprising a bail, a trunnion block mounted thereon for horizontal pivotal movement and having a central vertical bore therethrough normal to the horizontal axis of the trunnion block, a hook having a shank extending vertically and upwardly through said trunnion block bore, the shank being free to rotate around its vertical axis therein, a spring housing through which the shank extends, the lower end of said housing rotatably resting upon a face of said trunnion block, the upper end of said housing being splined to the shank whereby the shank and housing will positively rotate together while the shank may reciprocate vertically through the housing, a shoulder within the housing and adjacent to its lower end, a nut threaded onto the upper end of the shank and opposed to the shoulder, a helical spring interposed between the nut and said shoulder to support the weight of the hook and its load, a gear carried by the housing, a pinion in mesh therewith, a drive shaft for said pinion rotatably supported upon the trunnion block, and driving means carried by the trunnion block for imparting rotation thereto.

4. A drilling hook comprising a bail, a trunnion block mounted thereon for horizontal pivotal movement and having a central vertical bore therethrough normal to the horizontal axis of the trunnion block, a hook having a shank extending vertically and upwardly through said trunnion block bore, the shank being free to rotate around its vertical axis therein, a spring housing through which the shank extends, the lower end of said housing rotatably resting upon a face of said trunnion block, the upper end of said housing being splined to the shank whereby the shank and housing will positively rotate together while the shank may reciprocate vertically through the housing, a shoulder within the housing and adjacent to its lower end, a nut threaded onto the upper end of the shank and opposed to the shoulder, a helical spring interposed between the nut and said shoulder to support the weight of the hook and its load, a gear carried by the housing, a pinion in mesh therewith, a drive shaft for said pinion rotatably supported upon the trunnion block, a prime mover mounted upon the trunnion block and driving said shaft, and remote control means for said prime mover.

WALTER A. ABEGG.

REFERENCES CITED

The following references are of record in the file of this patent:

UNITED STATES PATENTS

Number	Name	Date
1,447,744	Wright	Mar. 6, 1923
1,478,020	Butler	Dec. 18, 1923
1,514,195	Brandon	Nov. 4, 1924
1,577,283	Mitchell	Mar. 16, 1926
1,891,832	Parks	Dec. 20, 1932
2,058,187	Spalding	Oct. 20, 1936
2,245,960	Claire	June 17, 1941