Oct. 27, 1970 J. F. BLASKI 3,535,836

BUILDING CONSTRUCTION

Filed Sept. 8, 1969 2 Sheets-Sheet 1

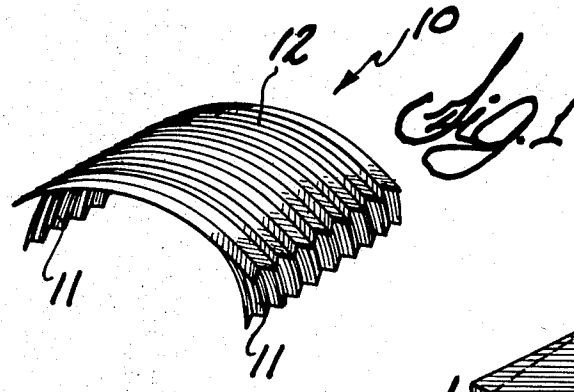

Fig. 1

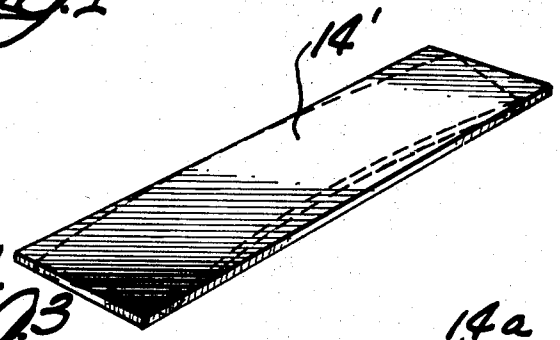

Fig. 3

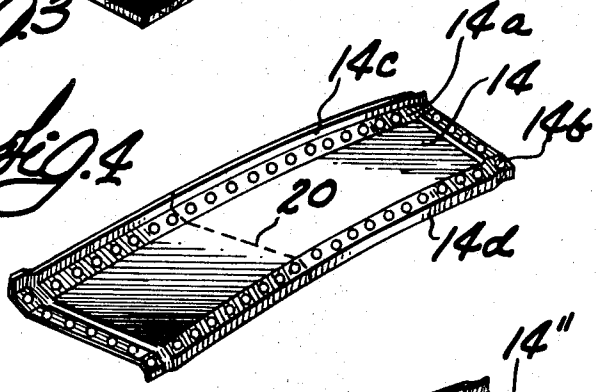

Fig. 4

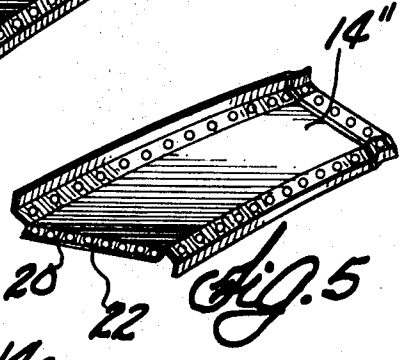

Fig. 5

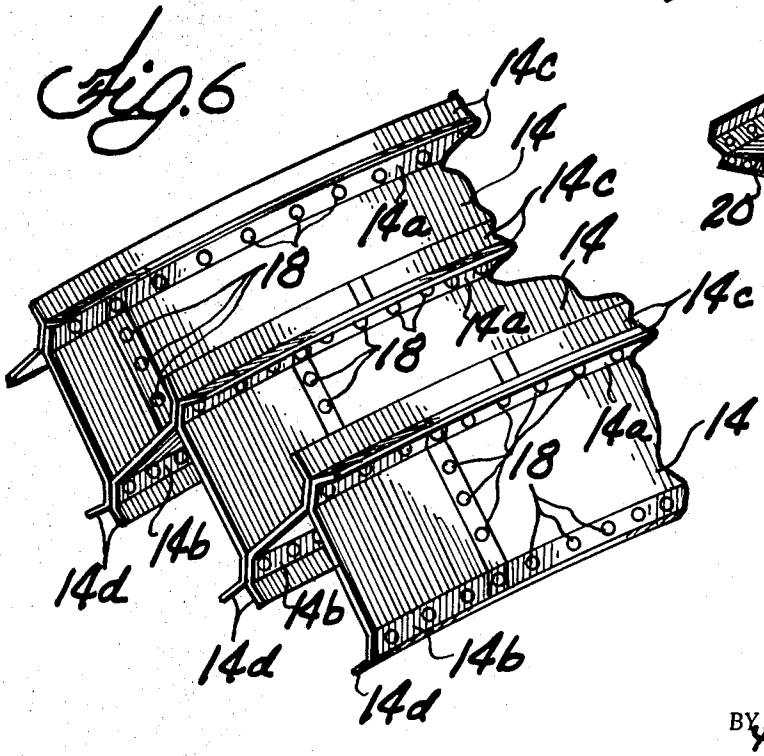

Fig. 6

INVENTOR.
John F. Blaski
BY Pendleton, Neuman, Seibold & Williams
Attys

Oct. 27, 1970 J. F. BLASKI 3,535,836

BUILDING CONSTRUCTION

Filed Sept. 8, 1969 2 Sheets-Sheet 2

Fig. 2

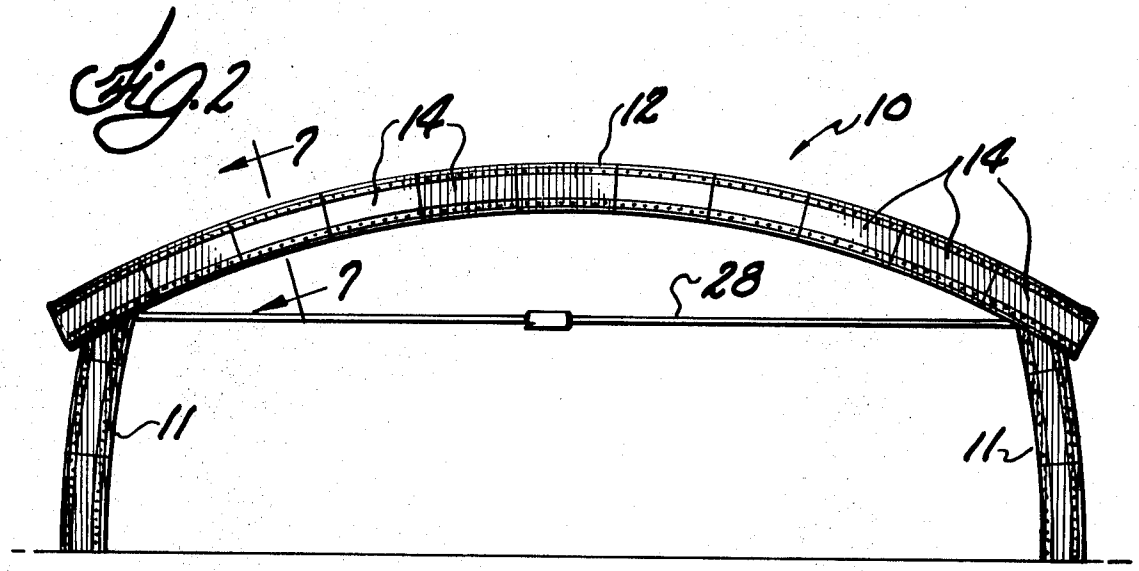

Fig. 7

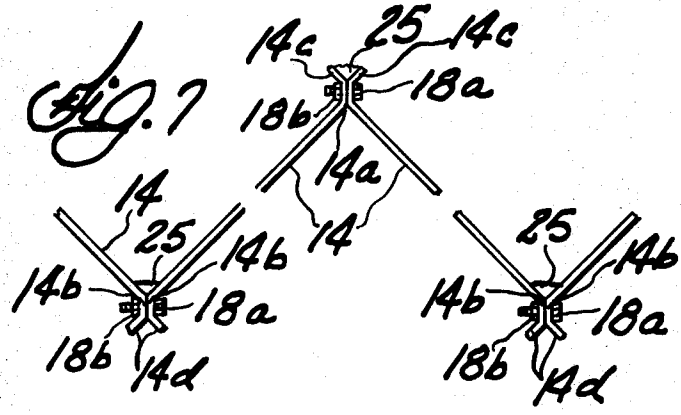

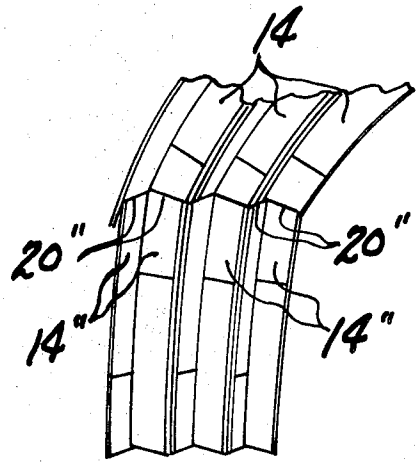

Fig. 8

INVENTOR.
John F. Blaski
BY Pendleton, Neuman, Seibold & Williams
Attys

United States Patent Office

3,535,836
Patented Oct. 27, 1970

3,535,836

BUILDING CONSTRUCTION

John F. Blaski, 1844 Miner St.,
Des Plaines, Ill. 60016

Continuation-in-part of application Ser. No. 734,826, Apr. 24, 1968. This application Sept. 8, 1969, Ser. No. 864,253

Int. Cl. E04b *1/32;* E04c *3/30*

U.S. Cl. 52—80 9 Claims

ABSTRACT OF THE DISCLOSURE

The side walls and the roof of a building supported on the side walls are formed of a plurality of panels which are curved longitudinally and transversely as in a sector of the surface of a frustum of a right circular cone and are disposed in side-by-side and, essentially, edge-on relationship. The panels have inner and outer flanges formed along each longitudinal edge thereof which are in contiguous angularly displaced relationship.

This application is a continuation-in-part of the application of John F. Blaski, Ser. No. 734,826, filed Apr. 24, 1968, now abandoned entitled Building Construction; of the application of John F. Blaski, Ser. No. 415,748, filed Dec. 3, 1964, now abandoned for Building Construction; of the application of John F. Blaski, Ser. No. 504,527, filed Oct. 24, 1965, now abandoned for Building Construction; and of the application of John F. Blaski, Ser. No. 729,866, filed Apr. 16, 1968, for Building Construction.

Background of the invention

The field of the invention relates in general to a building construction, more specifically, to a prefabricated building construction formed from a plurality of sheet-metal panels having curvatures in two directions transverse to each other.

A primary object of the present invention is to provide a new and improved building construction. More specifically, an object of the present invention is to provide a new and improved prefabricated building construction formed from a plurality of sheet-metal panels of frusto-conical configuration. In this connection it is an object to provide such a building construction which is adapted to be quickly and easily built by unskilled labor.

Quonset hut types of buildings made of corrugated metal pieces are known as, for example, in the Fouts Pat. No. 1,182,082. Buildings made of adjacent pieces of channel shaped cross section are known, for example, in Blaski Pat. No. 2,436,543, Canadian Pat. No. 695,513 and Belgian Pat. No. 532,015. Other flat panel constructions, diverse shaped, corrugated or simply curved flatly arranged pieces are known in patents Worthen No. 16,767, Thompson et al. No. 2,173,402, Blaski No. 2,271,451, Behlen No. 2,742,114 and Gatrell et al. No. 1,369,236.

Accordingly, another object of the present invention is to provide a new and improved building construction having a pair of curved sides and a curved roof supported by the sides. In this connection it is an object to provide such a building construction wherein the sides and the roof are formed with the same radius and of frusto-conical configuration.

A general object of the present invention is to provide a new and improved building construction characterized in its simplicity, strength and ruggedness.

Other objects and advantages of the present invention will become apparent upon reading the attached detailed description taken in conjunction with the drawings.

Summary

In a preferred form of the invention, a plurality of generally arcuate sheet-metal panels are provided which are curved longitudinally and transversely in the configuration of a sector of the surface of a frustum of a right circular cone and which have inner flanges and outer flanges formed along each longitudinal edge thereof, the inner and outer flanges being in contiguous angularly displaced relationship. Pairs of transversely adjacent panels are disposed in transversely adjacent relationship so that inner flanges thereof abut, and the abutting inner flanges are secured together to form substantially V shaped sections and to form channels between adjacent panels which are adapted to receive a sealant. The ends of the panels are offset so that the substantially V shaped sections may be connected together in end-to-end relationship, with their ends overlapping, to form rows of V shaped sections. A plurality of such rows of V shaped sections are built up to provide a pair of curved side walls and a curved roof which is supported on these side walls, by disposing a plurality of V shaped sections in side-by-slide relationship so that the other inner flanges abut and by connecting the abutting inner flanges together. The upper edges of the side walls engage the underside of the roof and the roof is suitably secured to the upper edges of the side walls. The building constructions will have a length dependent upon the number of rows of panels employed. A sealant may be applied to the channels formed between adjacent panels so that the structure is sealed thereby.

For the purpose of providing a detailed description of the present invention reference will now be made to the drawings wherein:

FIG. 1 is a perspective view of a building construction embodying the features of the present invention;

FIG. 2 is an enlarged end elevational view of the building construction of FIG. 1;

FIG. 3 is a perspective view of a generally rectangular sheet-metal plate, illustrating in dotted lines how the panel is to be curved for use in the building construction of FIG. 1;

FIG. 4 is a perspective view of a panel utilized in the building construction of FIG. 1;

FIG. 5 is a perspective view of a modified panel utilized in the side walls of the building construction of FIG. 1;

FIG. 6 is an enlarged fragmentary perspective view showing several interconnected panels as employed in the building construction of FIG. 1;

FIG. 7 is an enlarged fragmentary sectional view taken substantially along line 7—7 in FIG. 2; and

FIG. 8 is a perspective view showing the relationship between a side wall and the roof of the building construction shown in FIGS. 1 and 2.

While the invention has been shown and will be described in some detail with reference to a particular exemplary embodiment thereof, there is no intention that it be limited to such detail. Quite to the contrary, it is intended here to embrace all modifications, alternatives and equivalents falling within the spirit and scope of the invention as defined by the appended claims.

Referring now to the drawings and more specifically to FIGS. 1 and 2, a building construction **10** is illustrated which has been constructed in accordance with the teachings of the present invention. As may be seen, the building construction **10** includes a pair of curved side walls **11** and a curved roof **12** supported by the side walls. The building construction **10** is a modified and improved form of the building construction disclosed in copending application Ser. No. 729,866, filed Apr. 16, 1968, and allows for the formation of a building having a lower height with the same horizontal span. In its preferred form, the

building **10** is constructed of a plurality of panels **14**, the shape and configuration of which are substantially that of a sector of the surface of a frustum of a right circular cone, with flanges formed along the longitudinal edges of the panels. The panels **14**, preferably, are formed in accordance with the teachings of the copending application Ser. No. 729,866. The panels **14** may be connected together longitudinally in end-to-end relationship to form rows of panels and the rows of panels may then be connected together transversely in side-by-side relationship to provide a generally corrugated surface forming the curved side walls **11** and curved roof **12** of the building **10**. Alternatively, the panels **14** may be connected together transversely in side-by-side relationship to form sections of panels and the sections of panels may then be connected together longitudinally in end-to-end relationship to form the curved side walls **11** and the roof **12**. Since the foundation or base for the building does not comprise any part of the present invention, it has not been illustrated and will not be described. However, it will be readily apparent that any conventional foundation or base may be employed in connection with the building **10**.

The panels **14** are constructed so that they are curved longitudinally and transversely, i.e., in transverse directions, and so that they have inner flanges and outer flanges formed along the longitudinal edges thereof which are in contiguous angularly displaced relationship. Referring to FIG. 4, a panel **14** utilized in the building **10** is shown which may be produced from a substantially rectangular plate **14'** formed into an arcuate piece as shown by the dotted lines in FIG. 3, the plate preferably being sheet-metal. As may be seen, the panel **14** has a pair of inner flanges **14*a*** and **14*b*** and a pair of outer flanges **14*c*** and **14*d***, the flanges being formed along the longitudinal edges of the panels in contiguous angularly displaced relationship. It will be readily appreciated that the plate **14'** may be processed in various ways to form the panel **14**.

In the construction of the side walls **11** and the roof **12** of the building **10**, rows of panels may initially be formed and then the rows of panels may be connected together so that pairs of rows form substantially V shaped sections (see FIGS. 6 and 7). To facilitate the forming the rows of panels, the ends of the panels are offset so that they are adapted to overlap one another. Thus, a row of panels is formed by disposing the ends of a plurality of panels in overlapping relationship and by securing the ends of the panels together with suitable fasteners **18**. Thereafter, the inner flanges **14*a*** of rows of panels, which are constructed to mate, are disposed in face-to-face abutting relationship, i.e., the rows of panels are disposed in side-by-side relationship, and the inner flanges are secured together with suitable fasteners **18** to form substantially V shaped sections between pairs of transversely adjacent rows of panels. In like manner, the inner flanges **14*b***, which likewise are constructed to mate, of rows of panels are disposed in face-to-face abutting relationship secured together with suitable fasteners **18** to form substantially V shaped sections between pairs of transversely adjacent rows of panels. By combining a plurality of V shaped rows of panels, the desired side walls **11** and roof **12** may be formed. While any suitable fasteners **18** may be employed, the exemplary fasteners (FIG. 7) include bolts **18*a*** which accommodate nuts **18*b***.

Alternatively, the inner flanges **14*a*** of pairs of panels and the inner flanges **14*b*** of pairs of panels may be disposed in face-to-face abutting relationship and may be secured together by fasteners **18** to form substantially V shaped sections. The V shaped sections may then be connected together in end-to-end relationship to form rows of V shaped sections. Again, by combining a plurality of rows of V shaped sections the desired side walls **11** and roof **12** may be formed.

As may be seen by reference to FIGS. 2 and 8, the upper edges of the side walls **11** engage the under surface of the roof **12** and the roof **12** extends outwardly of or

overhangs the side walls. The roof **12** may, of course, be modified so that it does not extend outwardly of the side walls **11**. In accordance with the present invention, the upper edges of the upper panels forming the side walls **11** are formed to flushly engage the under surfaces of the end panels forming the roof **12**. The side walls **11** and roof **12** are suitably secured together by fasteners corresponding to the fasteners **18** which secure together adjacent panels **14**. In order to provide flush engagement with the roof, the upper panels of the side walls are formed by cutting the panel **14**, shown in FIG. 4, along a diagonal line, such as the dotted line **20**, to form a panel **14''** substantially as shown in FIG. 5. The upper edge **20''** of the panel **14''** is adapted to flushly engage the under side of an end panel forming the roof **12** as shown in FIG. 8 and is adapted to be readily secured thereto. For this purpose, upper flange **22''** is formed along the upper edge **20''** of the panel **14''**. Moreover, corresponding bolt holes are formed in the flanges **22''** of the upper panels **14''** forming the side walls and the portions of the end panels of the roof **12** engaged thereby to allow for bolting together the side walls **11** and the roof **12**.

With the panels **14** disclosed herein, substantially V shaped channels are formed between panels disposed in side-by-side relationship when the panels are connected together as shown in FIGS. 6 and 7. More specifically, substantially V shaped channels are formed between flanges **14*c*** of adjacent panels and between the main body portions of adjacent panels which are contiguous with flanges **14*b***. For the purpose of sealing the building structure, a sealant **25** may be applied to the channels formed between transversely adjacent panels (see FIG. 7). Thus, it will be apparent that the panels **14** facilitate the positive sealing of the building construction **10** so that a water-tight building is provided.

For the purpose of providing horizontal support to the building construction **10**, adjustable ties **28** may be provided which are connected between opposite ends of the roof **12**, or, alternatively, are connected to the opposite side walls **11**. The tie **28**, as will be readily apparent, will balance outwardly directed forces of the building construction **10**.

In view of the foregoing, it will be appreciated that the building **10** may be readily fabricated from the panels **14** and **14''**. Moreover, it will be readily apparent that the building constructed in accordance with the present invention may have a low ceiling height and a relatively wide horizontal span. Additionally, it will be appreciated that the resultant building construction is provided with a corrugated surface having outer and inner seams formed by abutting inner flanges of adjacent panels. The seams are generally arcuate and extend transversely of the longitudinal axis of the building construction **10**. Furthermore, a contiguous corrugated surface is provided which facilitates the drainage of rain, liquid or the like, that might accumulate on the surface of the building structure. Due to the double curvature of the panels, i.e., the longitudinal and transverse curvature, an exceptionally strong and rugged building structure may be constructed from relatively lightweight panels. Additionally, the panels are strengthened by the provision of two flanges adjacent each longitudinal edge and channels are provided between adjacent panels wherein a sealant may be applied to provide a water-tight building. Furthermore, the structure may be strengthened by the addition of cross-ties **28**.

In the formation of the building **10**, the side walls **11** and the roof **12** may be separately formed. The side walls **11** may then be positioned in place and the roof may be positioned on top of the side walls. Alternatively, a temporary tower or supporting column may be used to facilitate the building of double rows of panels forming a V shaped section for the side walls **11**. The roof **12** may then be built up on the side walls **11**. The building may be made to have any desired length, the length

thereof merely being dependent upon the number of adjacent panels which are connected together.

While particular embodiments of the invention have been shown, it will be understood, of course, that the invention is not limited thereto since many modifications may be made, and it is, therefore, contemplated by the appended claims to cover any such modifications as fall within the true spirit and scope of the invention.

The invention having thus been described, what is claimed and desired to be secured by Letters Patent is:

1. In a shell type building construction having inner and outer surfaces, the combination which comprises a pair of upstanding curved side walls, a convex-upwardly curved roof supported on the upper ends of the side walls, the side walls and roof each comprising a plurality of elongated panels disposed in side-by-side relation and a plurality of elongated panels disposed in end-to-end relation, each of said panels having oppositely disposed outer and inner longitudinal edge portions, first and second end portions, and a body portion between said longitudinal edge portions and said end portions, said outer and inner longitudinal edge portions of each of said panels being disposed relative to each other in substantially the relation of the longitudinal edge of the base, and the longitudinal edge of the top, respectively, of a sector of the surface of a frustum of a right circular cone, means operatively connecting together said outer longitudinal edge portions of adjacent panels in alternate pairs of said side-by-side panels in said side walls and in said roof, and means operatively connecting together said inner longitudinal edge portions of adjacent panels in alternate pairs of said side-by-side panels in said side walls and in said roof, and means securing the upper end portions of said side walls to said roof in underlying relation to the bottom face of said roof.

2. The invention according to claim 1 wherein each of said inner and outer longitudinal edge portions comprises a flange contiguous to said body portion of said panel, said flanges of said inner and outer edge portions of each said panel have the same but oppositely directed angular relationship to said body portion of said panel, and said flanges on said adjacent pairs of panels are operatively secured together.

3. The invention according to claim 1 wherein said outer longitudinal edge portion comprises a first flange contiguous to said body portion of said panel and a third flange contiguous to said first flange and disposed on the side thereof remote from said body portion, and said inner longitudinal edge portion comprises a second flange contiguous to said body portion of said panel and a fourth flange contiguous to said second flange and disposed on the side thereof remote from said body portion, said first and second flanges of said inner and outer longitudinal edge portions, respectively, of each panel have the same angularity relative to the body portion but are oppositely directed relative thereto, said first flanges on adjacent panels are operatively secured together, said second flanges on adjacent panels are operatively secured together, and said third and fourth flanges on said secured-together first and second flanges flare away from each other to form a channel.

4. The invention according to claim 1 wherein each of said panels has its end portions offset and in overlapping relationship with the ends of longitudinally adjacent panels.

5. The invention according to claim 1 including means for horizontally supporting the building construction.

6. The invention according to claim 1 including horizontal struts secured to opposite sides of the roof to provide hoizontal support to the building construction.

7. The invention according to claim 1 wherein the curved roof overhangs the side walls.

8. The invention according to claim 7 wherein the radii of the side walls and of the roof are the same.

9. The invention according to claim 7 including the upper panels forming the side walls having transverse flanges formed at the upper edges thereof which engage the under-side of panels forming the roof, means for securing together mating flanges of adjacent panels, and means for securing the transverse flanges of the upper side wall panels to panels in the roof engaged thereby.

References Cited

UNITED STATES PATENTS

16,767	3/1857	Worthen	52—86
1,182,082	5/1916	Fouts	52—18
1,369,236	2/1921	Gatrell et al.	52—416
2,173,402	9/1939	Thompson et al.	52—416
2,271,451	1/1942	Blaski	52—86
2,302,949	10/1942	Palmer	52—452
2,436,543	2/1948	Blaski	52—86
2,742,114	4/1956	Behlen	52—262

FOREIGN PATENTS

7,878	5/1888	Great Britain.
8,777	5/1893	Great Britain.
532,015	3/1955	Belgium.
695,513	10/1964	Canada.
110,999	7/1940	Australia.

HENRY C. SUTHERLAND, Primary Examiner

J. L. RIDGILL, JR., Assistant Examiner

U.S. Cl. X.R.

52—86