PCT WORLD INTELLECTUAL PROPERTY ORGANIZATION
International Bureau

INTERNATIONAL APPLICATION PUBLISHED UNDER THE PATENT COOPERATION TREATY (PCT)

(51) International Patent Classification 6 :
H04M 11/00, H04L 12/64

A1

(11) International Publication Number: **WO 97/07625**

(43) International Publication Date: 27 February 1997 (27.02.97)

(21) International Application Number: PCT/CA96/00460

(22) International Filing Date: 10 July 1996 (10.07.96)

(30) Priority Data:
08/516,269 17 August 1995 (17.08.95) US

(71) Applicant: NORTHERN TELECOM LIMITED [CA/CA]; World Trade Center of Montreal, 8th floor, 380 St. Antoine Street West, Montreal, Quebec H2Y 3Y4 (CA).

(72) Inventors: FOCSANEANU, Mihai; 70 Charing Road, Nepean, Ontario K2G 4C5 (CA). SKILLEN, Richard, Prescott; 1353 Bunsden Avenue, Mississauga, Ontario L5H 2B3 (CA). LIVERMORE, Frederick, Caldwell; 11 Third Avenue, Stittsville, Ontario K2S 1C5 (CA).

(74) Agent: TOYOOKA, Yoshiharu; Northern Telecom Limited, Patent Dept., P.O. Box 3511, Station "C", Ottawa, Ontario K1Y 4H7 (CA).

(81) Designated States: CA, JP, European patent (AT, BE, CH, DE, DK, ES, FI, FR, GB, GR, IE, IT, LU, MC, NL, PT, SE).

Published
With international search report.
Before the expiration of the time limit for amending the claims and to be republished in the event of the receipt of amendments.

(54) Title: AN IMPROVED ACCESS TO TELECOMMUNICATIONS NETWORKS IN MULTI-SERVICE ENVIRONMENT

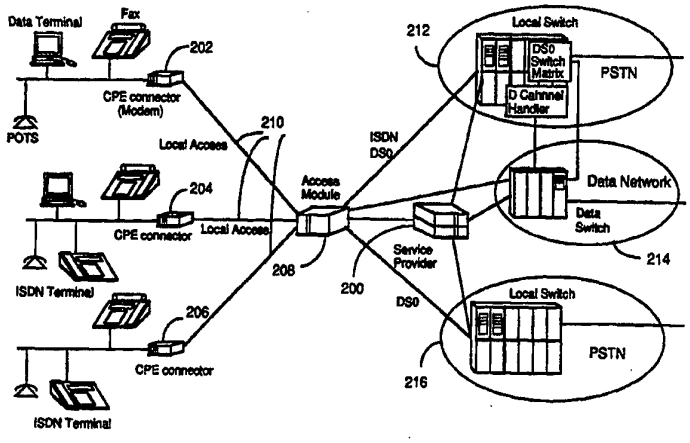

(57) Abstract

In current voice telephony, CATV, and wireless networks, traffic is channelized for both access and transport. This channelization is wasteful of resources where multiple services have varying demands for bandwidth and holding times, or a service generates traffic that is bursty in nature. The invention solves these problems by providing flexible and adaptable multiservice access to the networks. Customer requirements are checked by monitoring traffic on a local access at a connection request and/or during the established connection, and the local access is configured according to the transmission requirements. The local access can also be configured in response to the network information.

FOR THE PURPOSES OF INFORMATION ONLY

Codes used to identify States party to the PCT on the front pages of pamphlets publishing international applications under the PCT.

AM	Armenia	**GB**	United Kingdom	**MW**	Malawi
AT	Austria	**GE**	Georgia	**MX**	Mexico
AU	Australia	**GN**	Guinea	**NE**	Niger
BB	Barbados	**GR**	Greece	**NL**	Netherlands
BE	Belgium	**HU**	Hungary	**NO**	Norway
BF	Burkina Faso	**IE**	Ireland	**NZ**	New Zealand
BG	Bulgaria	**IT**	Italy	**PL**	Poland
BJ	Benin	**JP**	Japan	**PT**	Portugal
BR	Brazil	**KE**	Kenya	**RO**	Romania
BY	Belarus	**KG**	Kyrgystan	**RU**	Russian Federation
CA	Canada	**KP**	Democratic People's Republic of Korea	**SD**	Sudan
CF	Central African Republic			**SE**	Sweden
CG	Congo	**KR**	Republic of Korea	**SG**	Singapore
CH	Switzerland	**KZ**	Kazakhstan	**SI**	Slovenia
CI	Côte d'Ivoire	**LI**	Liechtenstein	**SK**	Slovakia
CM	Cameroon	**LK**	Sri Lanka	**SN**	Senegal
CN	China	**LR**	Liberia	**SZ**	Swaziland
CS	Czechoslovakia	**LT**	Lithuania	**TD**	Chad
CZ	Czech Republic	**LU**	Luxembourg	**TG**	Togo
DE	Germany	**LV**	Latvia	**TJ**	Tajikistan
DK	Denmark	**MC**	Monaco	**TT**	Trinidad and Tobago
EE	Estonia	**MD**	Republic of Moldova	**UA**	Ukraine
ES	Spain	**MG**	Madagascar	**UG**	Uganda
FI	Finland	**ML**	Mali	**US**	United States of America
FR	France	**MN**	Mongolia	**UZ**	Uzbekistan
GA	Gabon	**MR**	Mauritania	**VN**	Viet Nam

AN IMPROVED ACCESS TO TELECOMMUNICATIONS NETWORKS IN MULTI-SERVICE ENVIRONMENT

Field of the Invention

The present invention relates to a multi-service access platform which permits the formation of a universal service network encompassing a plurality of telecommunication networks. The invention relates particularly to a multi-service platform which allows a plurality of CPEs accessing any services provided by a plurality of service providers which may utilize any of the plurality of telecommunication networks.

Background of the Invention

Facsimile machines and other data handling customer premise equipment are introduced not only into offices but individual homes in great numbers. As personal computers are found in more homes, users of computer networks such as "Internet" by way of telephone networks through modems are increasing in phenomenal numbers. The majority of these data transactions through modems or fax machines use existing local exchange carrier networks for data transmission. Fax machines, computers, and telephone sets at a customer premise are connected by local access to a central telephone switching office. The local access is variously called as subscriber's loop, local loop, drop etc. In cases of CATV or wireless, local access is also called subscriber connection, wireless access etc. It has been shown that the majority access "Internet" by dial-up telephone connection. Figure 1 shows how a telephone, fax computer and other intelligent agents are typically connected through a publicly switched telephone network and data networks and their interconnections. Terminal equipment at a customer premise consist of a telephone set, fax machine, a personal computer etc., and are collectively called CPE which stands for customer premise equipment. CPE 10 is connected through inside wiring 12 at the customer premise and then through the feeder/distribution plant (also called subscriber's loop, local access loop) 14 to an access module (e.g. linecard) 16. The linecard is in turn connected to a local switch 18 that is part of the public switched telephone network (PSTN) 20. PSTN operates in channelized mode

and provides continuous connection to another subscriber 22. The telephone service is established through a connection protocol (e.g. dialup, on-hook/off-hook protocol) and upon connection provides fixed channelized bandwidth on a continuous basis for the duration of the call. A facsimile connection is essentially the same as a telephone connection with the exception of the presence of a modem 24 at each facsimile terminal. The figure also shows a connection involving a data network. For such a connection, the CPE (e.g. computer) also requires a telephone subscriber's loop to the PSTN by dialup service which connects to a data service provider 26 through its own subscriber's loop 28. The data service provider 26 then provides a data connection through a data network 30 to a database service or other data service subscribers.

The present CATV service is mainly unidirectional, broadcast from a service provider through its own network which has no connection to any other network. In small scale, experimental multimedia telecommunications networks are being field tested at some locations. Referring to Figure 2, such CATV access to telecommunications services is illustrated. In the figure, the CPE (e.g. TV) is connected through local wiring (possibly coax or fiber optic) to a converter 40, sometimes called a set-top box, that connects to the drop cable, taps, and splitters to a CATV access module 42 through an access loop 44 (most likely fiber optic or coax) and then through to the CATV services provider (cableco) 46 or other services providers 48 at which point connections to other service networks 50 can be provided. It is common for each subscriber to require a separate bidirectional channel for two-way telecommunications services. Figure 2 also shows a wireless connection. For wireless service, the CPE is connected through the wireless interface or CPE connector 40 and a radio frequency channel 52 to a base station or access module 42, and then to the wireless services provider who in turn provides a connection to the specific service or transport network such as PSTN 54. During the entire call, a fixed amount of channel bandwidth is allocated to the service even though the specific radio frequency channel may change in a seemingly uninterrupted manner during the call.

In all these cases, the CPE is provided with channelized access of a fixed bandwidth, which makes it difficult to provide other services or

to change service parameters during the time that the connection is established.

Computer connections are generally much longer in duration than voice or other connections. Computers perform data transactions in packets and their traffic is very bursty. The bursty traffic is more suitable for statistical multiplexing and is most efficiently handled by specially designed data networks such as packet switched networks. At present, however, all publicly switched traffic, data and voice, is sent over the subscriber's loop and interoffice trunking in a circuit switched network connection to destination customer premise equipment or to a data network.

Multimedia broadband switched networks by the name of the "Information Superhighway" have been widely proposed. This superhighway may carry different types of traffic seamlessly, accepting voice, data and video information from any terminal and delivering it to any other terminals simultaneously. At present, however, different types of networks, both channelized and packetized, exist separately and independently.

In circuit switched networks, a connection is maintained during the whole duration of a call through switches and other associated network elements, regardless of the type of the call. Only one circuit switched connection can be maintained for the call. No broadcast or multicast through the circuit switched network is possible. Today, telephone networks are becoming increasingly more occupied by data traffic which generates no additional revenues to the local exchange carriers. Furthermore, access to worldwide computer networks, such as "Internet" etc. is now being provided by commercial network service providers, such as America Online", "SprintLink" etc. Using PSTN as the access, the network service providers provide access to various other private networks, academic networks etc., which contain vast numbers of databases for value added services.

Figure 3 shows diagrammatically how data networks such as "Internet" are accessed through a telephone subscriber's loop. An individual end user subscribes to the service of a commercial network service provider 60. Access to a data network is usually by dialing the telephone number of a commercial data network service provider using a modem. Thus the end user CPE 62 uses a modem and makes a

dialup connection to a local switch 64 by a subscriber's loop 66. The local switch 64 makes an inter-office trunk connection 68 to a terminating local switch 70 within a PSTN 72. The terminating local switch connects through a local loop 74 and a terminating modem to a service provider 60. After a proper modem handshaking protocol, the user inputs the address of a destination such as the "Internet" server with whom he desires a connection. Data networks and database services are accessed using a TCP/IP protocol. The "Internet" packet is routed over a T-1 link 76 (or other facilities) to the Internet 78. In this arrangement, the local switches 64 and 70 as well as the interoffice trunk 68 are occupied for the duration of the connection, which is usually measured in hours rather than the shorter holding time associated with voice calls which are measured in minutes. Consequently, very expensive common equipment in the PSTN is required for the duration of the "Internet" access, even during a period of inactivity by the end user.

The use of a telephone network by network service users increases usage of the telephone network enormously without a proportionate increase of additional revenues to the telephone company. It is also cumbersome for an individual user to access various networks. It will be shown below that the present invention reduces this investment in the PSTN (31) as well as enhances the capabilities of the overall global communications network.

There have been many patents which address network data transfer issues. For example, U.S. Patent No. 4,178,480, issued December 11, 1979 (Carbrey) describes a single multiplexing circuit which permits use between a central communication system and a remote communication circuit for concurrently transmitting outgoing voice signals, outgoing data, and outgoing auxiliary signals from the remote communication circuit to the central communication system via a single pair of wires. Voice signals are audio signals in the voice frequency band. Input and output data streams comprise periodic bursts of bipolar pulses of PAM transmitted in the voice band and the auxiliary signals are bipolar pulses of PWM format transmitted also in the voice band but during a silent period of data signals.

U.S. Patent No. 4,608,686, issued August 26, 1986 (Barselloti) describes a circuit for transmitting both voice and data at the same time

between a subscriber's set and a switching exchange via a bidirectional wire link.

U.S. Patent No. 5,410,754, issued April 25, 1995 (Klotzbach et al) teaches an interface between a wire-line carrier system and a remote host on a LAN. The interface includes a protocol conversion between PCM data and TCP/IP packet data.

U.S. Patent No. 5,267,301, issued November 30, 1993 (Nishii) is directed to an interfacing device for discriminate voice and fax signals.

U.S. Patent No. 4,903,263, issued February 20, 1990 (Patel) relates to an adjunct device to existing switches for providing ISDN capabilities.

Hereinafter, the following terms will be used in connection with the description of the invention.

- Network access (local access network) - A managed facility between the CPE and communications networks (e.g. copper pairs, coaxial, fiber, wireless).
- Channelized protocol - Communications protocol requiring end-to-end allocation of network resources of a specified bandwidth for the duration of the session, independent of the actual information transfer activity (e.g. a circuit switched network, such as PSTN implements a channelized protocol for telephone traffic).
- Non-channelized protocol - Communications protocol allocating network resources for the duration of actual information transfer activity (e.g. a packet switched network implements a non-channelized protocol for transfer of signals).
- Traffic in channelized format - Communications traffic using a channelized protocol.
- Traffic in non-channelized format - Communications traffic using a non-channelized protocol.

Objects of the Invention

It is an object of the invention to provide better utilization of CPE by providing an intelligent connection to multiple types of service and non-service specific transport networks in multiple protocol environments.

It is a further object of the invention to provide a system which allows a simpler, more transparent delivery of information on an end-to-end basis.

It is yet another object of the invention to provide a system for optimized throughput of existing access pipes according to specific service needs.

It is still another object of the invention to provide a system having improved functionalities between the CPE and access or service provider's LANs.

It is a further object of the invention to provide a flexible access system to utilize any transport network resource on a service-by-service basis;

It is yet a further object of the invention to provide a system which enables simultaneous multiple service delivery over the access network.

It is another object of the invention to provide a system which can perform an alternate routing of services among transport networks.

It is yet another object of the invention to provide a system which enables customer service and feature control by individual service.

Summary of the Invention

Briefly stated, according to one aspect, the invention relates to a method of interfacing CPEs and communications networks which encompass PSTN, data networks, wireless networks, satellite networks, CATV, ATM networks and the like, through local access to form a universal services network. The method comprises a step of extracting information content from traffic for services at the local access between a CPE and the communications networks. The method further includes steps of determining appropriate routing prior to handling in the communications networks, according to the extracted information content, and routing the extracted information content to appropriate service providers and/or network resources.

According to another aspect, the invention is directed to an access module for interfacing a CPE having a CPE modem functionality and communications networks which encompass PSTN, data

networks, wireless networks, satellite networks, CATV, ATM networks and the like by way of a local access to form a universal services network. The access module comprises a line interface for interfacing between the local access and the communications networks and a processor for extracting information content from traffic for services. The line interface includes an access modem functionality to communicate with the CPE modem functionality. The access module further includes a storage for storing information concerning user profiles, the services provided by the service providers, an address correlation table or a protocol conversion table, and a controller for determining the routing, converting the address and/or the protocol, and routing the extracted information content through appropriate network resources and one or more similar or dissimilar CPEs according to the information stored in the storage, a CPE request, or network status information obtained from the network resources.

Brief Description of the Drawings

Figure 1 shows access to service providers such as public switched network and data networks service providers;

Figure 2 shows CATV access to some other service providers;

Figure 3 is a schematic illustration of a presently used "Internet" access;

Figure 4 shows a connection through a circuit switched network using POTS calling protocol;

Figure 5 shows connections through a circuit switched network and data switched network using ISDN calling protocol;

Figure 6 shows connections through a circuit switched network and a data switched network using both ISDN and POTS calling protocols;

Figure 7 shows access to various service providers according to the invention;

Figure 8 shows in detail a CPE connector and an access module in a local access network according to one embodiment;

Figures 9-11 show various configurations in which the local access network of the invention is used; and

Figures 12-15 show in detail a CPE connector and an access module according to other embodiments of the invention.

Detailed Description

Figure 4 is a simple illustration of how telephone sets and computers are connected through today's PSTN, which is a circuit switched network of which, in this case, two local switches are shown. The calling protocol of a telephone is as follows: at a calling party, the off-hook is indicated by the telephone set (called POTS for plain old telephone set) 100 or by the modem 102 under the control of the computer 104 and is detected by a linecard 106. The local switch provides dial tone indicating that it is ready to receive the called party's telephone number. The digits dialed by the telephone set or modem represent the address of the called party and the switch provides a DS-0 channel between the two parties and applies ringing to the called party. In response to the ringing, a voice call can proceed when the called party's telephone set 108 goes off hook. Alternatively, the modem 110 at the called party can provide the off hook response to the ringing. The modem 110 under the control of its computer 112 performs an appropriate handshaking with the calling party's modem before data exchange can proceed. A subsequent on hook from either party indicates the termination of the call and the DS-0 connection is dropped. In this example, a modem appears to the local switch similar to a telephone set.

Figure 5 shows diagrammatically how telephone sets and computers are connected through a PSTN in the known ISDN environment. An ISDN terminal 120 is connected by way of a network termination 122 to ISDN linecard 124 through a digital subscriber loop (DSL) 126. The ISDN terminal can be a computer or an ISDN telephone set, or a collection of them. The ISDN terminal sends a call request via a D channel packet specifying the address of the called ISDN party in accordance with the ISDN numbering plan (E.164 address). The D channel handler 128 at the local switch determines if the requested connection through the B channel is a circuit switched connection or a packet switched connection. The D channel handler can do this by checking the address of the called party. The circuit switched connection, e.g. voice (indicated by the called party's telephone number) is routed to another circuit switch which provides the access function to the called party. If the requested connection is a packet switched connection, the switch translates the address for data

network routing and sends the request to the called party's terminal. The called party's terminal responds with an acceptance message. Subsequently, the data are passed through a DS-0 channel in the local switch serving the calling party to the data network and through a DS-0 channel in the local switch serving the called party to the called party's terminal.

Figure 6 is an illustration of another known instance where a connection is desired between an ISDN terminal and an ordinary telephone or a computer, both connected through an analog subscriber loop. A circuit switched connection is set up in each direction and maintained in a similar fashion, as shown in Figures 4 and 5. If the call request is a packet switched connection, the calling ISDN terminal must specify the E.164 address of a network modem 140. The network modem prompts the ISDN terminal for the called party's directory number and dial the called party. If a connection is requested by a computer at the ordinary telephone site to a computer at the ISDN site, the calling modem 142 dials the directory number of the network modem 140 which prompts the calling terminal for the destination ISDN directory number and completes the connection. In both cases, the data are passed through DS-0 channels in local switches.

As discussed earlier, the number of subscribers to "Internet" is growing at a very fast pace and it is expected that growth in the usage of data networks will continue. Access to such data networks through the existing telephone network and subscriber's loop is very inefficient and cumbersome. The invention solves these problems and helps to create one global data network with capabilities which are presently found in local area networks (LANs).

As also discussed above, today most data access is channelized due to the end-to-end requirements of modems in the access and transport networks. This invention provides the technology of interfacing CPEs and communications networks which encompass PSTN, data networks, wireless networks, satellite networks, CATV, ATM networks and the like, through local access to form a universal services network. This is accomplished by the use of a common protocol for encapsulating the data and signaling information between the CPE connector and the access module (this protocol is identical for all access media) and a transmission protocol appropriate for each

access medium (e.g. 2B1Q for copper pairs). According to one aspect, the invention provides bi-directional emulation of the modem at the access module such that the channelized circuit functionality of the modem need not be transmitted across the transport network to the called party and statistical multiplexers and other compression techniques can be utilized at the access module to decrease network costs. Only the useful portion of the data is transmitted in the transport network. The transmission format can also be adapted at the access module (e.g. rate adaptation, protocol adaptation, etc.) to better match the terminals, transport, or service capability available.

Figure 7 illustrates diagrammatically the invention embodied in the actual environment, in which a plurality of different types of CPEs can access a plurality of different types of services provided by service providers which may utilize different types of transport networks, e.g. PSTN 212 and data switched networks 214. The data switched networks may include, among other networks, a packet switched network, an ATM network using protocols such as TCP/IP, X.25, ATM, etc. Two types of local switches, one with a D channel handler for ISDN access and one without it, are shown in the PSTNs. There is shown a service provider 200 who provides various services through the networks. It is called collectively a service provider but in reality there are many service providers including PSTN providers, data switched network providers, data network access service providers, database service providers, wireless access providers, CATV service providers etc. CPEs are able to seamlessly access various services provided by the service provider through local access and cooperating modules called CPE connector and an access module. In the figure, three groups of different CPEs, e.g. a POTS, data terminal, fax, ISDN terminal etc., are connected to three different CPE connectors 202, 204, 206 with differing capabilities. Each CPE connector operates with the access module 208 through its local access 210. The access module contains a plurality of line interfaces, each interface looking after each local access. The access module 208 connects service providers who may have their own networks or may utilize any of a plurality of transport networks 212, 214 and 216 for services requested by CPEs. In the figure, three local accesses are shown as an example only. As CPE connectors are provided with different capabilities depending upon the customer's

needs, the access module must be able to adapt such capabilities. This is accomplished by providing the access module with a matching line interface for each local access, or by providing universal line interfaces with a capability to emulate different local access and CPE connector. In the figure, CPE connector 202 is shown as a simple modem with no special intelligence, whereas CPE connectors 204 and 206 contain a variety of capabilities which match those of the access module.

Figure 8 shows one local access network according to one embodiment. In the figure, CPE connector 230 includes a simple modem 232 for handling computer or fax signals. Voice signals from a telephone set and modem signals are sent over the local access. It should be noted that in most cases computers and facsimiles have their own modem. In those cases, the CPE connector would simply be a junction point of the CPE modem and the telephone set. Services requested by the CPE and provided by service providers are transported through the network in various forms. Connection requests and grants are embodied in many different protocols. In all these cases, information concerning services and protocols are transmitted as electrical, and/or optical signals. The local access consists generally of a pair of twisted copper wires, although many other local access facilities are available for different bandwidths, such as wireless, fiber optics, coax cable, etc. An access module 234 at the end of the local access has a line interface 236 for this local access. It contains a transceiver 238 with identifying capabilities and a modem functionality 240. It also contains POTS/codec service 242. The identifying circuit detects and identifies a service request as a POTS service or data service request. The modem and POTS functionalities can be emulated by software stored in a memory 244 and downloaded by a processor 246 as required. They can also be built into the access module as a dedicated resource directly on, or associated with, the line interface. They can also be provided as a shared resource serving several line interfaces.

A processor 246 performs a selection and enablement of either POTS service or data services in response to the identifying circuit. The access module also has a local database 248 or has access to a remote database, both of which store information concerning the user profile, address table and service provider profile, etc. A decoder 250 decodes the modem signal and a controller 252 analyzes the contents of a data

connection request to identify the service requested. Upon identification of the type of service requested, the controller performs address conversion, protocol conversion, rerouting etc., and exchanges packetized data formed at PAD 254 (packet assembly/disassembly) with the data network in accordance with information stored in the database. The information from the database may also call for multiplexing functions of signals from other line interfaces 256 by MUX 258.

The database contains a user service profile (USP), such information concerning the user subscribed service categories, the modalities of handling different types of traffic, and address conversion for easy addressing. The database may also contain protocol conversion, rerouting, and other information which may be required by transport networks for better management. The user service profile (USP) can be built as a subsystem in each access module, a separate computing module serving several access modules, or it can be integrated into existing capabilities such as intelligent network (IN) data storage and retrieval devices. Regardless of the specific implementation, the USP will facilitate remote access by the end-user, network provider and service provider to view, create, modify or erase information in a user service profile. The remote access capability will include several levels of security to provide protection of the database information, and the user or service provider may change privileges.

As mentioned earlier, the modem functionality at the access module can be emulated by software or built in a dedicated device. In either case, the modem functionality provides all layer 1 and layer 2 functionalities supported by today's modem standards. As part of layer 1, these functionalities include physical connection activation and deactivation, data circuit identification, sequencing, either synchronous or asynchronous transmission of physical service data units, and fault condition notification. Layer 2 implementation may include data link connection, error notification, flow control and data unit transfer. The basic difference from the current private line modem implementation is that the access line can be used alternatively between, for example, voice and data.

The modem functionality is also able to emulate all the capabilities of the corresponding customer modems in accordance with

the requested service. For example, implementing the V.34 modem capability, the access module will be able to interface with 28.8 Kb/s customer modems and also negotiate the lower rate connections function and actual capability of the user's modem.

The modem in the access module is also able to dynamically adjust the speed of communications with the customer's modem, function of the speed limitations imposed by the far-end access module, or by the far-end modem. This capability is realized by the presence of a communications capability, in-band or out-of-band, between the access module and the distant equipment to which the user is connected. Three possible configurations will be supported.

Figure 9 depicts one configuration which involves communications between two users 300 and 302 connected to the data network 304 through access modules 306 and 308. End user modems 310 and 312 are connected to access modules. The two access modules 306 and 308 negotiate the characteristics of the communications link based on the end-user modem capabilities and the available network resources.

Figure 10 shows another configuration which involves a user 350 connected to the data network 352 via a modem 354 and an access module 356. A distant user 358 is connected to the PSTN 360 via dial-up modem 362. The access module 356 has the options of handling the call as a voice call through PSTN, or as a data call by routing it through the data network and invoking a network dial-out protocol (e.g. V.25 bis) at the far-end to allow completing the call through PSTN.

A third possible configuration is shown in Figure 11 and involves a user 400 connected to the data network 402 via an access module 404. A service provider's server 406 is connected to the data network 402. The access module will negotiate the characteristics of the communications link based on the end-user modem capabilities and the available network resources.

When a customer's service request is first detected, it is determined whether the request is for data services or a POTS service, and then the type of data service is determined by consulting the database. It should be noted that this service request comes to the access module from either direction, that is to say, in one instance a near end user requests a service from service providers and in another,

in response to a service request from a far end user, a service provider requests an access module to make a connection to any CPE at the near end user.

According to one embodiment, detection of a service request is performed by a procedure herein called a "service default" procedure. In this embodiment, the access module is in the default, e.g. "service default", state. In the service default state, the network is normally receiving and expecting packet data. Therefore data can be initiated from or received by the CPE at any time. As described above, this is a marked difference from the existing procedure involving a PSTN where the default is POTS services. The access module can alter the state of the access at any instant that a service request is received. When the access module is in alternate (non-default) state, the line interface provides the physical interface to the user's copper loop. It includes the basic "BORSCHT (Battery, Overvoltage protection, Ringing, Supervision, Coding, Hybrid, Testing)" functionalities specified for POTS services, i.e. providing battery, current detection, electrical protection, signaling recognition (pulse or DTMF), analog/digital conversion, and loopbacks for testing.

According to this embodiment, the user subscribes to two types of services, a data service supported by a 28.8 Kb/s modem and a voice (POTS) service. The line interface is remotely programmable by the network service provider with two distinct personalities, one includes a data service 28.8 Kb/s modem emulation and the other a POTS line interface. The "service default" identification method defines a default state for the interface "data service".

In the service default state, when the customer modem (CPE connector) is activated, the access module line interface sends a carrier frequency and initiates the modem-to-modem handshaking protocol. Subsequently, in the service default state, the user can originate data transmission and can receive data from other data service users on the network. The type of requested service is identified by analyzing the content of a service request by consulting the database.

A customer's request for POTS service, for example by using a DTMF symbol "*" or "#", is interpreted as a request for dial tone and the data connection is dropped. The POTS personality is then downloaded to the line interface and the processor provides the

physical interface to the user's copper loop. The request for dial tone is passed to the local circuit switch, e.g. via TR-303 protocol.

At the termination of the POTS call, the access module reverses to the default state by downloading the modem personality to the line interface.

A change of mode can be caused not only as a result of an initiated request by the user but as a result of an automated non-intrusive observation of the channel. By non-intrusive observation, the access module monitors customer communications activity during an already-established call. This monitoring is used by the access module to detect another call attempt by the user and to determine the type of service requested. An example of an implementation of this functionality is an extension of the capability described earlier. With a "POTS mode" personality, the line interface identifies and interprets a carrier from the user modem as a request for data service. Several possible actions are available to the access module. In this example, a data service request initiated by the user during a POTS call will disconnect the phone and present a carrier to the user's modem.

According to yet another embodiment, the access module operates in a dual-mode operation in which the voice service and data service are supported simultaneously on the local access. For example, provided that the user's modem has appropriate capabilities, the access module can simultaneously support voice traffic with a bandwidth of 32 Kb/s and data traffic at 9.6 Kb/s.

The service identification capabilities of the access module is also used to segregate the outgoing traffic by type of service and to direct it to the appropriate network resources to carry it to the intended destination.

The access module can direct the voice traffic to a channelized bus, multiplex it on a transport facility and then interface with a local switch at the edge of PSTN. The switch interface may implement any of the current standard interface specifications, for example the interface described in Bellcore's TR-303.

In a different embodiment, as shown in Figure 12, the access module can also direct the data traffic to a non-channelized bus 500 running a LAN-type protocol, to which bus outside connection can be provided through an interface device such as a bridge etc. This bus

supports the interface to all user data traffic homing on the access module from near end users as well as far end users. The bus implements a simple addressing scheme for the user's data.

By using information stored in the database, protocol translation, address conversion, and mediation of services on a service by service basis is possible and is accomplished through the use of mediation in the access module based on tables under the control of both the users and services providers. The access module can then interface with a variety of data networks to deliver/receive the data services traffic. The actual network selection is based on the information contained in the user service profile. An embodiment of this functionality includes one or more circuits providing gateway functions to the associated network equipment. A list of possible network interfaces include X.25 packet networks, frame relay, SMDS, ATM, TCP/IP, etc.

Figure 13 shows yet another embodiment in which the access module can dynamically select a different network from the one prescribed in the user profile, to carry the packetized data traffic. This alternate selection will not adversely impact the quality of service (QOS). An example of the use of this capability is to route data traffic on PSTN during low traffic load periods. Similarly, the access module can packetize voice at PAD 550 and route voice traffic on a data network. The voice service QOS is maintained by continuous monitoring of the transmission delay.

Several non-content altering functions can be implemented in another embodiment also shown in Figure 13 at the access module to further increase the efficiency of the packetized data transport through the network. Examples of these functionalities include data compression at 552 and statistical multiplexing at 554.

Recognizing the request for existing services such as 411, 611 and 911 as an automatic data connection will enhance the services being provided and lead to a simpler, less expensive implementation of these services.

Thus far, the invention has been described in circumstances in which the CPE connector is a simple modem without intelligence. In further embodiments of the invention, local access capability can be further extended if the CPE connector is a modem provided with

intelligence. Then the access module and the CPE connector can negotiate a variety of parameters which will be described below.

Referring to Figure 7, the CPE connector 204 contains greater capabilities which match with those of the access module. In this example, CPE connector 204 connects its local access and a plurality of CPEs, e.g. a POTS, a data terminal, fax, and an ISDN terminal.

Figure 14 shows in more detail the CPE connector and the access module. In the figure, the CPE connector includes a modem 600 for handling computer signals and a codec 602 to handle the telephone set signal . The codec converts analog signals to/from PCM signals (e.g. ADPCM signal). PCM signals and modem signals are sent by a transceiver 604 over the local access in a line code. There are many line codes such as 2B1Q etc. available for this purpose. The bandwidth of a pair of twisted copper wires can be raised to 128 kbps or higher, depending upon the line code used, although many other local access facilities such as wireless, fiber optics coax cable etc., have different and mostly wider bandwidths. An access module contains a companion transceiver 606 and a modem 608. Of course, like earlier embodiments, these modem functionalities can be emulated by software and can be built into the access module as a dedicated resource directly on, or associated with, the line interface or as a shared resource serving several line interfaces. A modem built as a shared resource negotiates the parameters of the communication link on a connection request-by-connection request basis.

Transceiver 606 monitors the traffic coming in from both directions. The access module has a database or access to a database storing the user profile, the available communications resources and the status of these resources. Upon identification of the type of service requested by the user, a processor 610 of the access module determines an intelligent method of handling the customer traffic by consulting the information.

The local access is the facility connecting the CPE and the access module. It is a limited resource shared among all communications services used by the customer. Its capabilities are limited by the transmission characteristics of the copper pair, wireless connection or CATV based facility etc., and by the specific transmission equipment used at the two ends. In this embodiment, the CPE connector has

capabilities which match the access module transmission capabilities and has also sufficient intelligence to execute the instructions received from the access module. With these capabilities, the access module provides significant flexibility in the actual services mapping onto the local access.

With a matching CPE connector which contains matching modem capabilities, the access module can negotiate and agree with the CPE connector on an appropriate transmission scheme which provides efficient use of the bandwidth of a local access in the following manner.

Bandwidth flexibility can be controlled by the access module to dynamically negotiate and allocate the desired amount of bandwidth to the local access on a service-by-service, call-by-call basis. For example, the total bandwidth available can be allocated in multiples of a predetermined fixed unit channel capacity, e.g. nx64Kb/s for a DS-1 rate, or can be made available in a non-channelized fashion allowing data traffic bursts up to the maximum speed of the local access facility.

Alternate use of the local access by different services can be accomplished by negotiation, on a service-by-service, call-by-call basis, between the access module and the CPE connector of the amount of bandwidth to be allocated to the service prior to originating or terminating the call. For example, on a digital loop using 2B1Q coding technology, 64Kb/s out of the available 144 Kb/s may be allocated to a voice call. Alternatively, to complete a data call, 144Kb/s may be used to support the maximum throughput of the data connection.

Simultaneous use of the local access for originating/delivering multiple communications services can also be achieved in the invention. This new functionality is enabled by the access module to dynamically negotiate, partition and allocate the available access bandwidth among the various services. The end user can also enable services and assign priorities in real time to the access module, without appreciable loss of grade of service for individual services. This functionality allows such things as enabling multiple services within a generic service, i.e. two simultaneous faxes or a voice and data call with appropriate handling screen prompts provided to the terminal (1), etc., for the specific services being provided.

Figure 15 shows one embodiment which illustrates the utilization of this capability. A digital loop using, for example, 2B1Q

coding technology can support a voice and a data call simultaneously. The initial negotiation between the access module and the CPE connector can allocate 64Kb/s to the voice call and the remaining 80Kb/s to the data traffic. A new incoming voice call can be handled simultaneously with the ongoing calls. In this embodiment, the access module and the CPE connector invoke a voice compression algorithm 710, e.g. 32Kb/s ADPCM, and deliver both voice connections within the initial 64Kb/s allocated bandwidth. This procedure will not impact the transfer speed for the data connection. Another embodiment is for the access module and the CPE connector to allocate 64Kb/s to the second voice call and reduce the bandwidth allocated to the data traffic to 16Kb/s. These possible actions can be enacted automatically by the access module based on a pre-arranged user service profile, or they can be enacted by specific user commands upon receiving a notification of the incoming call. Customarily this CPE connector can be realized by the use of devices commonly known as NT1 and terminal adapter as shown in the figure.

A user can indicate a change in the service request, and/or can select a different action from the access module by using a sequence of low-level signaling schemes, e.g. hook flash or DTMF, or a message-based control communications scheme. The access module will support a message-based communications channel between the CPE and the access module for passing status information and control messages. An example of the use of the message-based communication channel is when a user is changing the service profile stored at the access module.

Abbreviated dialing can be used to inform the access module of the user's intent to place a POTS call or establish a data connection. In a similar example with the one presented above, the user subscribes to two types of services, a data service supported by a 28.8 Kb/s modem and a voice (POTS) service.

In another embodiment, communication is requested by the user via a request for dial tone. A special frequency dial tone is originated by the access module. In this example, a request for a data connection is preceded by a "1" DTMF signal originated by the user's modem. The access module ensures that the line interface has a "data mode" personality software. A request for a voice (POTS) connection is

preceded by a "0" DTMF signal originated by the user's telephone. The access module ensures that the line interface has a "POTS mode" personality software.

The same method can be used to initiate a change from an established data call to a voice call, or from an established voice call to a data call.

As in the earlier embodiment, recognizing abbreviated dialing at the access module rather than the local switch can also provide a simpler, less expensive implementation of existing services, such as 411, 611 and 911. Recognizing the request for these services as an automatic data connection can enhance the services being provided.

The access module also has the capability of providing conversion between packetized voice and PCM to allow for alternate routing. This allows the use of a multiplicity of access and transport networks in the establishment, translation, and completion of a service transaction by the access module under the control of the end user. Providing protocol translation, address conversion, and mediation of services on a service by service basis is also possible.

Where protocol conversions are required to allow connection of dissimilar services, terminals, or network elements, this is performed in the access module after consulting the appropriate service database. An example of the need for this functionality is the delivery of messages originated on a workstation to a telephone terminal with display capabilities using the ADSI protocol. The access module provides address translation and address correlation functions. This is accomplished by specific routing tables that are contained in or accessible by the access module. These routing tables are updateable from various sources in the overall network.

An example of the use of this functionality is the translation of an Internet address to a packet data address for delivery to a packet network user. Another example is the correlation of an Internet user address with his PSTN address for delivery of voice traffic originated on a computer to a telephone set.

The intelligent access module enables the specific service to be routed to many different networks or service providers according to the address, service identified, network resource availability, and user preference profile. This is accomplished by specific routing tables that

are contained in or accessible by the access module. These routing tables are updateable from various sources in the overall network. The invention provides for information format changes necessary to accommodate communications over various facilities and the use of common bus and LAN protocols between the access module and the various services providers or the data networks or the CPE connector.

This invention provides for logical assignments in real time at the access module or services provider for alternate routing among available transport networks, e.g. voice can be routed over data networks and vice versa. This allows dynamic traffic load balancing, alternate routing, resource sharing and service management of the information transfer throughout the network, thereby minimizing protocol and transport translations between the end points.

This invention further provides extension of the LAN functionality out to the CPE by extending the layer 2 and above protocols into the CPE connector (4) from the access module. The access module maintains the "point-of-presence" or "map" among CPE devices, service providers, and network resources. This is accomplished by maintaining files of resources, profiles, preferences, addresses, and protocol conversions.

The intelligent dialogue between the CPE connector and the access module provides the ability to simulate, for the end user and the service provider, a simple to use, customizable LAN-type environment. The access module will support a specific customer service profile by continuously updating the CPE on the availability of a particular server anywhere on the network. At the same time, the access module will indicate the presence of a user device to the service provider community.

According to a further embodiment, the access module has the capability to store user's incoming and outgoing information, and forward the information in its original form, or modified according to the user's profile and under user's control. The actual storage device can be built into the access module, or can exist as an external resource to which the access module has access.

The following examples illustrate the use and benefits of this capability.

One example shows the use of the access module storage capability in optimizing the information transfer rate through the network and enhancing the use of network resources. In the current implementation, the information transfer between two terminals, or between a server and a terminal, is performed at the lowest of the maximum speeds supported by the two devices. This results in inefficient use of the faster device, and inefficient use of the network resources, i.e. higher overhead and longer holding times. The storage capability of this invention improves the information transfer by segregating a device-dependent transfer rate in the access and the device-independent network transfer rate. The information originated by the slower device is stored at the access module and is transferred through the network at network optimum speed. An access module at the far-end delivers the information at the optimum speed of the receiving device.

Another example of the use of the storage capability of the access module is the more efficient use of network and CPE in handling fax messages. In the current implementation, the originating fax machine attempts to establish a real-time link with the terminating fax machine, prior to sending the information. When the terminating fax machine is busy, the originating fax machine repeats its attempt to connect at regular intervals. Storing the information at the access module improves the process by ensuring the delivery of the fax message in a single attempt. The fax information is stored at the access module and it is delivered when the destination device is available. In addition, the benefits illustrated in the previous example also apply. A fast fax machine does not have to wait for the handling response of a slower machine.

A third example illustrates the benefits of the access module storage capability in time-shifting the delivery of a message under user control. In the current implementation, if the destination device is not available to receive the message, the originator will have to repeat its attempt to connect to the destination device, or, if the connection is established, the originator will receive no indication that the message was not received. This invention allows the message to be stored at the access module for later delivery and also the access module can provide the originator with some indication on the progress of the delivery.

The access module will inform the destination user of the waiting message by sending a notification to a different device according to the user's profile. A notification of an incoming message can be sent to the user display phone using the ADSI protocol. The destination user has the ability to select from a list of available options the desired action, e.g. receive the message, delete the message, send automatic acknowledgment to the originator, etc.

WHAT IS CLAIMED IS:

1. In communications networks which encompass one or more PSTN, data networks, wireless networks, satellite networks, CATV, ATM networks and other communications networks, a method of interfacing CPEs to the communications networks through local access to form a universal services network comprising steps of:

extracting information content from traffic for services at the local access between a CPE and the communications networks;

determining appropriate routing prior to handling in the communications networks, according to the extracted information content; and

routing the extracted information content to appropriate service providers and/or network resources.

2. The method according to claim 1 comprising a further step of:

an access module 208 placing the local access in default mode in which the CPE forms part of the service provider environment and the access module is ready to receive or deliver traffic in a non-channelized format to and from the CPE.

3. The method according to claim 2 comprising a further step of:

the access module placing the local access in an alternate mode other than the default mode in which the modem functionality at the access module is bypassed for traffic in a channelized format to and from the CPE .

4. The method according to claim 3 comprising a further step of:

the access module toggling between the default and the alternate modes in response to the extracted information content.

5. The method according to claim 4 wherein the extracted information content contains a prompt generated by the CPE, service providers, and/or network resources to activate the toggling of modes.

6. The method according to claim 5 comprising a further step of:

storing the extracted information content at the access module for later delivery of services.

7. The method according to claim 4 comprising further steps of:

converting the address and/or protocol of the traffic in reference to an address correlation table and/or a protocol conversion table, to which tables the access module has reading privileges; and

routing the extracted information content to appropriate network resources, service providers and/or one or more destinations according to the converted address and/or protocol.

8. The method according to claim 7 wherein there are one or more dissimilar CPEs connected to the local access, comprising a further step of:

the access module delivering and/or receiving traffic to and/or from an appropriate CPE according to user profiles to which the access module has reading privileges.

9. The method according to claim 8 comprising a further step of:

storing the extracted information content at the access module for later delivery of services.

10. The method according to claim 4 comprising further steps of:

converting the address and/or protocol of the traffic in reference to an address correlation table and/or a protocol conversion table, to which tables the access module has reading privileges; and

routing the extracted information content to appropriate network resources, service providers and/or one or more destinations according to the converted address and/or protocol in response to network status information obtained from the network resources or a request from the CPE.

11. The method according to claim 10 wherein there are one or more dissimilar CPEs connected to the local access, comprising a further step of:

the access module delivering and/or receiving traffic to and/or from an appropriate CPE according to user profiles to which the access module has reading privileges.

12. The method according to claim 11 comprising a further step of:
storing the extracted information content at the access module for later delivery of services.

13. The method according to claim 3 comprising a further step of:
the access module placing the local access in a dual-mode operation in which the default mode and alternate mode exist simultaneously.

14. The method according to claim 13 comprising further steps of:
converting the address and/or protocol of the traffic in reference to an address correlation table and/or a protocol conversion table, to which tables the access module has reading privileges; and
routing the extracted information content to appropriate network resources, service providers and/or one or more destinations according to the converted address and/or protocol.

15. The method according to claim 14 wherein there are one or more dissimilar CPEs connected to the local access, comprising a further step of:
the access module delivering and/or receiving traffic to and/or from an appropriate CPE according to user profiles to which the access module has reading privileges.

16. The method according to claim 15 comprising a further step of:
storing the extracted information content at the access module for later delivery of services.

17. The method according to claim 13 comprising further steps of:
converting the address and/or protocol of the traffic in reference to an address correlation table and/or a protocol conversion table, to which tables the access module has reading privileges; and

routing the extracted information content to appropriate network resources, service providers and/or one or more destinations according to the converted address and/or protocol in response to network status information obtained from the network resources or a request from the CPE.

18. The method according to claim 17 wherein there are one or more dissimilar CPEs connected to the local access, comprising a further step of:

the access module delivering and/or receiving traffic to and/or from an appropriate CPE according to user profiles to which the access module has reading privileges.

19. The method according to claim 18 comprising a further step of:

storing the extracted information content at the access module for later delivery of services.

20. The method according to claim 1 comprising a further step of:

an access module 208 and a CPE connector 202, 204, 206 placing the non-channelized local access therebetween in default mode in which the CPE forms part of the service provider environment and the access module is ready to deliver or receive traffic in a non-channelized format to and from the CPE.

21. The method according to claim 20 comprising a further step of:

an access module and a CPE connector placing the local access therebetween in an alternate mode other than the default mode in which modem functionalities at the access module and the CPE connector are bypassed for traffic in a channelized format to and from the CPE .

22. The method according to claim 21 comprising a further step of:

the access module toggling between the default and the alternate modes in response to the extracted information content.

23. The method according to claim 22 wherein the extracted information content contains a prompt generated by the CPE, service

providers and/or network resources to initiate the toggling of the mode.

24. The method according to claim 23 comprising a further step of:
storing the extracted information content at the access module for later delivery of services.

25. The method according to claim 22 comprising further steps of:
the access module and/or the CPE connector converting address and/or protocol of the traffic in reference to an address correlation table and/or a protocol conversion table, to which tables the access module and/or CPE connector have reading privileges; and
routing the extracted information content to appropriate network resources, service providers and/or one or more destinations according to the converted address and/or protocol.

26. The method according to claim 25 wherein there are one or more dissimilar CPEs connected to the CPE connector, comprising a further step of:
the access module or CPE connector delivering and/or receiving traffic to or from an appropriate CPE according to user profiles to which the access module or CPE connector has reading privileges.

27. The method according to claim 26 comprising a further step of:
storing the extracted information content at the access module for later delivery of services.

28. The method according to claim 22 comprising further steps of:
the access module or CPE connector converting the address and/or protocol of the traffic in reference to an address correlation table and/or a protocol conversion table, to which tables the access module or CPE connector has reading privileges; and
the access module or CPE connector routing the extracted information content to appropriate network resources, service providers and/or one or more destinations according to the converted address and/or protocol in response to network status information obtained from the network resources or a request from the CPE.

29. The method according to claim 28 wherein there are one or more dissimilar CPEs connected to the CPE connector, comprising a further step of:

the access module or CPE connector delivering and/or receiving traffic to or from an appropriate CPE according to user profiles to which the access module or CPE connector has reading privileges.

30. The method according to claim 29 comprising a further step of:

storing the extracted information content at the access module for later delivery of services.

31. The method according to claim 21 comprising a further step of:

the access module placing the local access in a dual mode operation in which the default mode and the alternate mode exist simultaneously.

32. The method according to claim 31 comprising further steps of:

the access module and/or the CPE connector converting the address and/or protocol of the traffic in reference to an address correlation table and/or a protocol conversion table, to which tables the access module and/or CPE connector have reading privileges; and

routing the extracted information content to appropriate network resources, service providers and/or one or more destinations according to the converted address and/or protocol.

33. The method according to claim 32 wherein there are one or more dissimilar CPEs connected to the CPE connector, comprising a further step of:

the access module or CPE connector delivering and/or receiving traffic to or from an appropriate CPE according to user profiles to which the access module or CPE connector has reading privileges.

34. The method according to claim 33 comprising a further step of:

the access module and the CPE connector dynamically negotiating the use of the local access.

35. The method according to claim 34 comprising a further step of:

storing the extracted information content at the access module for later delivery of services.

36. The method according to claim 31 comprising further steps of:

the access module or CPE connector converting the address and/or protocol of the traffic in reference to an address correlation table and/or a protocol conversion table, to which tables the access module or CPE connector has reading privileges; and

the access module or CPE connector routing the extracted information content to appropriate network resources, service providers and/or one or more destinations according to the converted address and/or protocol in response to network status information obtained from the network resources or a request from the CPE.

37. The method according to claim 36 wherein there are one or more dissimilar CPEs connected to the CPE connector, comprising a further step of:

the access module or CPE connector delivering and/or receiving traffic to or from an appropriate CPE according to user profiles to which the access module or CPE connector has reading privileges.

38. The method according to claim 37 comprising a further step of:

the access module and the CPE connector dynamically negotiating the use of the local access.

39. The method according to claim 38 comprising a further step of:

storing the extracted information content at the access module for later delivery of services.

40. The method according to claim 31 comprising a further step of:

the access module and the CPE connector dynamically negotiating the use of the local access.

41. The method according to claim 40 comprising a further step of:

storing the extracted information content at the access module for later delivery of services.

42. In communications networks which encompass one or more PSTN, data networks, wireless networks, satellite networks, CATV, ATM networks and other communications networks, an access module for interfacing a CPE having a CPE modem functionality to the communications networks by way of a local access to form a universal services network, comprising:

a line interface 236, 256 for interfacing between the local access and the communications networks, the line interface including an access modem functionality 240 to communicate with the CPE modem functionality 232;

a processor 246 for extracting the information content from traffic for services;

a storage 248 for storing information concerning user profiles, the services provided by the service providers, an address correlation table or a protocol conversion table; and

a controller 252 for determining the routing, converting the address and/or the protocol and routing the extracted information content to appropriate network resources and one or more similar or dissimilar CPEs according to the information stored in the storage, a CPE request, or network status information obtained from the network resources.

43. The access module according to claim 42 wherein the access modem functionality is configurable according to the requirements of the resources of the local access.

44. The access module according to claim 43 wherein:

the access module has a default mode in which the CPE modem functionality and access modem functionality communicate with each other to receive or deliver traffic in a non-channelized format to and from the CPE; and

an alternate mode in which the CPE modem functionality and access modem functionality are bypassed to support traffic in a channelized format to and from the CPE .

45. The access module according to claim 44 further comprising:

a toggling circuit for toggling between the alternate and default modes.

46. The access module according to claim 45 wherein the local access is a pair of copper wires.

47. The access module according to claim 46 further comprising a memory device for storing the extracted information content for later delivery of services.

48. The access module according to claim 47 wherein the access module and the CPE have companion transceivers and exchange signals over the pair of copper wires in 2B1Q code for one or more similar and/or dissimilar services.

49. The access module according to claim 45 wherein the local access is a coax cable, fiber optics or wireless.

50. The access module according to claim 49 further comprising a memory device for storing the extracted information content for later delivery of services.

51. The local CPE access network for interfacing CPEs and communications networks which encompass PSTN, data networks, wireless networks, satellite networks, CATV, ATM networks and the like by way of a local access to form a universal services network comprising:

a CPE connector interfacing the CPEs and the local access and including a CPE modem functionality and a controller; and

the access module according to claim 45 wherein the controller of the CPE connector and the processor of the access module negotiate dynamically for the use of resources of the local access for one or more similar and/or dissimilar services in the default or alternate mode.

52. The local CPE access network according to claim 51 wherein:

the local access is a pair of copper wires; and

the CPE connector and the access module have companion transceivers for one or more similar and/or dissimilar services.

53. The local CPE access network according to claim 52 wherein the CPE connector and/or the access module further includes a memory device for storing the extracted information content for later delivery of services.

54. The local CPE access network according to claim 53 wherein the access module and the CPE connector have companion transceivers and exchange signals over the pair of copper wires in 2B1Q code for one or more similar and/or dissimilar services.

55. The local CPE access network according to claim 51 wherein:
the local access is a coax cable, fiber optics or wireless; and
the CPE and the access module have companion coax, fiber optic or wireless transceivers for one or more similar and/or dissimilar services.

56. The local CPE access network according to claim 55 wherein the CPE connector and/or the access module further includes a memory device for storing the extracted information content for later delivery of services.

57. The access module according to claim 44 further comprising:
the CPE and the access module have companion transceivers for activating a dual-mode operation in which the default mode and alternate mode exist simultaneously.

58. The access module according to claim 57 wherein the local access is a pair of copper wires.

59. The access module according to claim 58 further comprising a memory device for storing the extracted information content for later delivery of services.

60. The access module according to claim 59 wherein the CPE and the access module have companion transceivers and exchange signals over the pair of copper wires in 2B1Q code for one or more simultaneous similar and/or dissimilar services.

61. The access module according to claim 57 wherein:
the local access is a coax cable, fiber optics or wireless; and
the CPE and the access module have companion coax, fiber optic or wireless transceivers for one or more simultaneous similar and/or dissimilar services.

62. The access module according to claim 61 further comprising a memory device for storing the extracted information content for later delivery of services.

63. The local CPE access network for interfacing CPEs and communications networks which encompass PSTN, data networks, wireless networks, satellite networks, CATV, ATM networks and the like by way of a local access to form a universal services network comprising:
a CPE connector interfacing the CPEs and the local access and including a CPE modem functionality and a controller; and
the access module according to claim 57 wherein the controller of the CPE connector and the processor of the access module negotiate dynamically for the use of resources of the local access for one or more simultaneous, similar and/or dissimilar services in the dual mode operation.

64. The local CPE access network according to claim 63 wherein:
the local access is a pair of copper wires; and
the CPE connector and the access module have companion transceivers for one or more simultaneous similar and/or dissimilar services.

65. The local CPE access network according to claim 64 wherein the CPE connector and/or the access module further includes a memory

device for storing the extracted information content for later delivery of services.

66. The local CPE access network according to claim 65 wherein the CPE connector and the access module have companion transceivers and exchange signals over the pair of copper wires in 2B1Q code for one or more simultaneous, similar and/or dissimilar services.

67. The local CPE access network according to claim 63 wherein:
the local access is a coax cable, fiber optics or wireless; and
the CPE connector and the access module have companion coax, fiber optic or wireless transceivers for one or more simultaneous similar and/or dissimilar services.

68. The local CPE access network according to claim 67 wherein the CPE connector and/or the access module further includes a memory device for storing the extracted information content for later delivery of services.

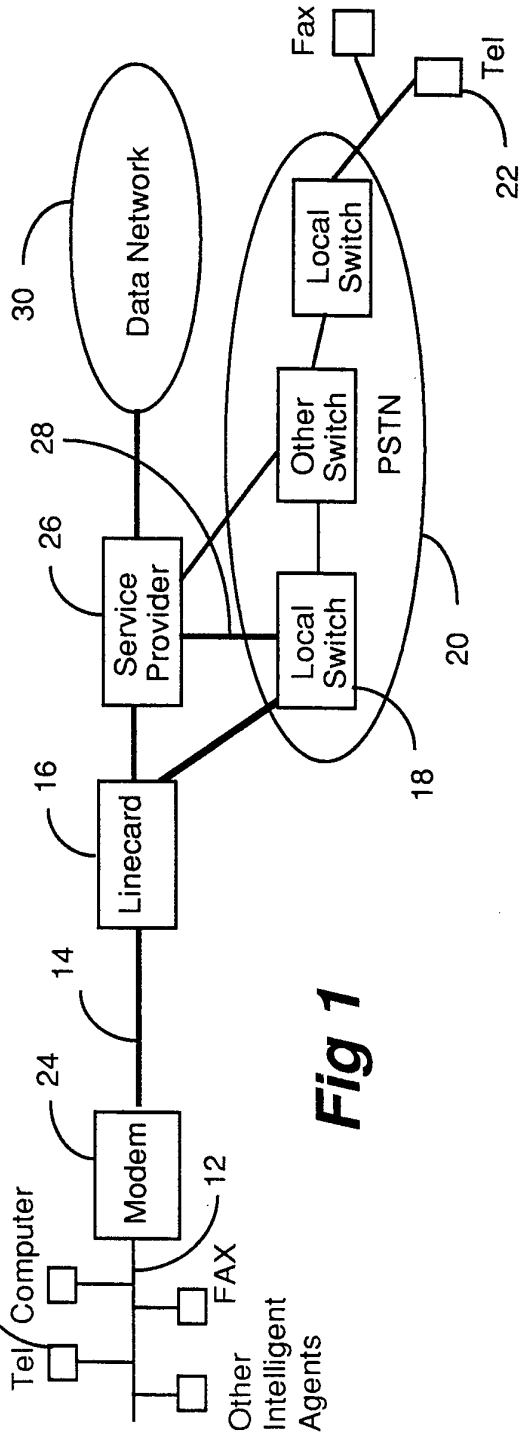
Fax
Tel
22
Data Network
30
Local Switch
Other Switch
PSTN
28
26
Service Provider
Local Switch
20
18
16
Linecard
14
24
Modem
12
10
Computer
FAX
Other Intelligent Agents

Fig 1

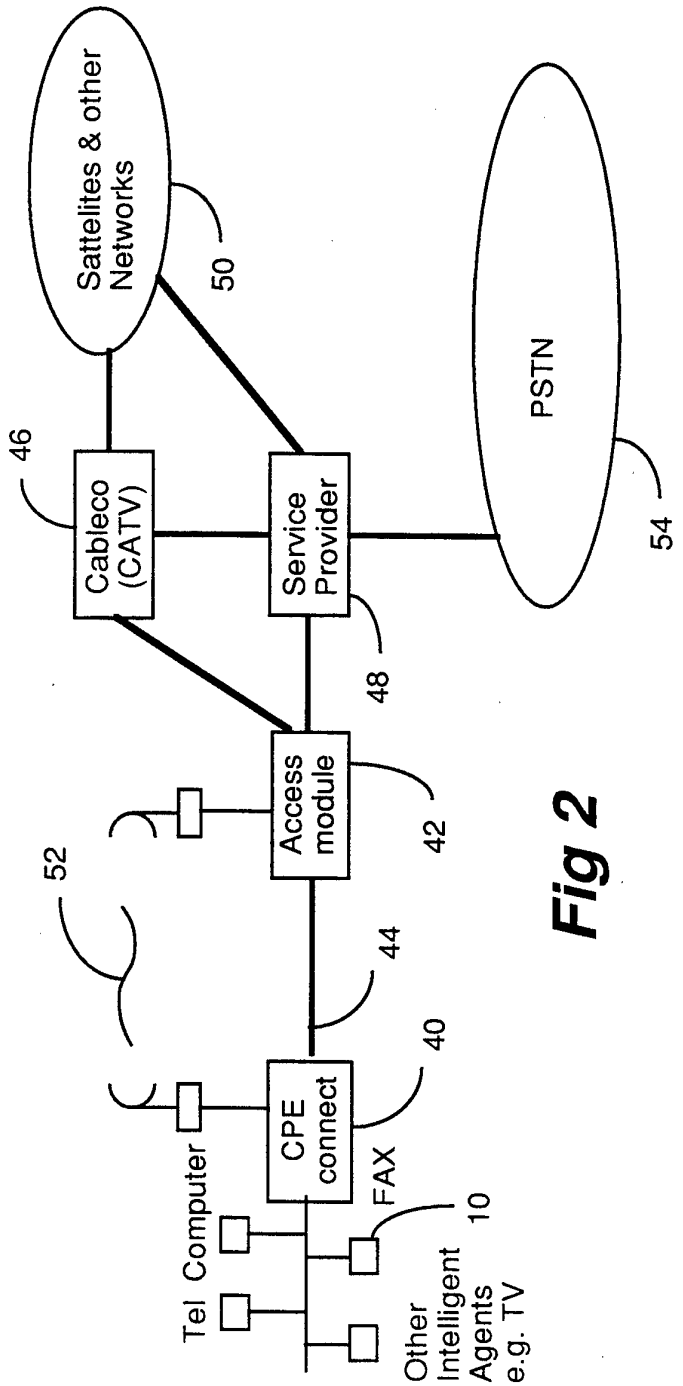
Sattelites & other Networks
50
PSTN
54
46
Cableco (CATV)
Service Provider
48
Access module
42
52
44
40
CPE connect
Tel
Computer
FAX
10
Other Intelligent Agents e.g. TV

Fig 2

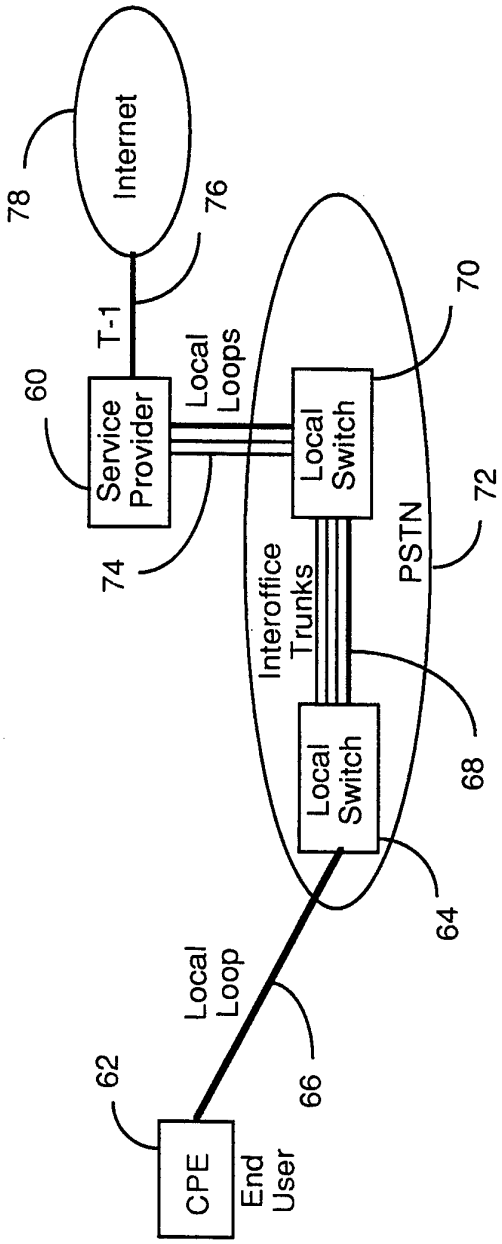
Internet
78
76
T-1
Local Loops
70
60
Service Provider
Local Switch
72
74
PSTN
Interoffice Trunks
68
Local Switch
64
Local Loop
66
62
CPE
End User

Fig 3

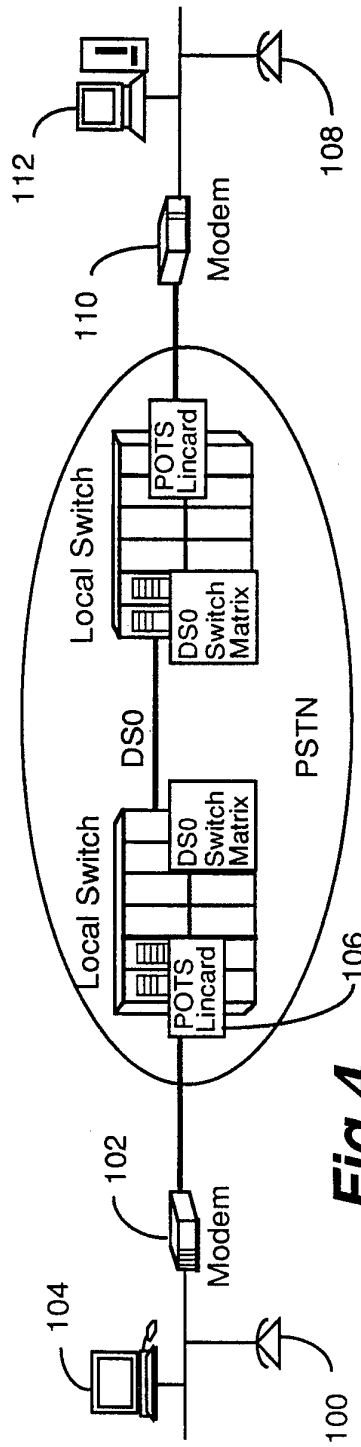
112
108
Modem
110
POTS Lincard
Local Switch
DS0 Switch Matrix
DS0
PSTN
Local Switch
DS0 Switch Matrix
POTS Lincard
106
102
Modem
104
100

Fig 4

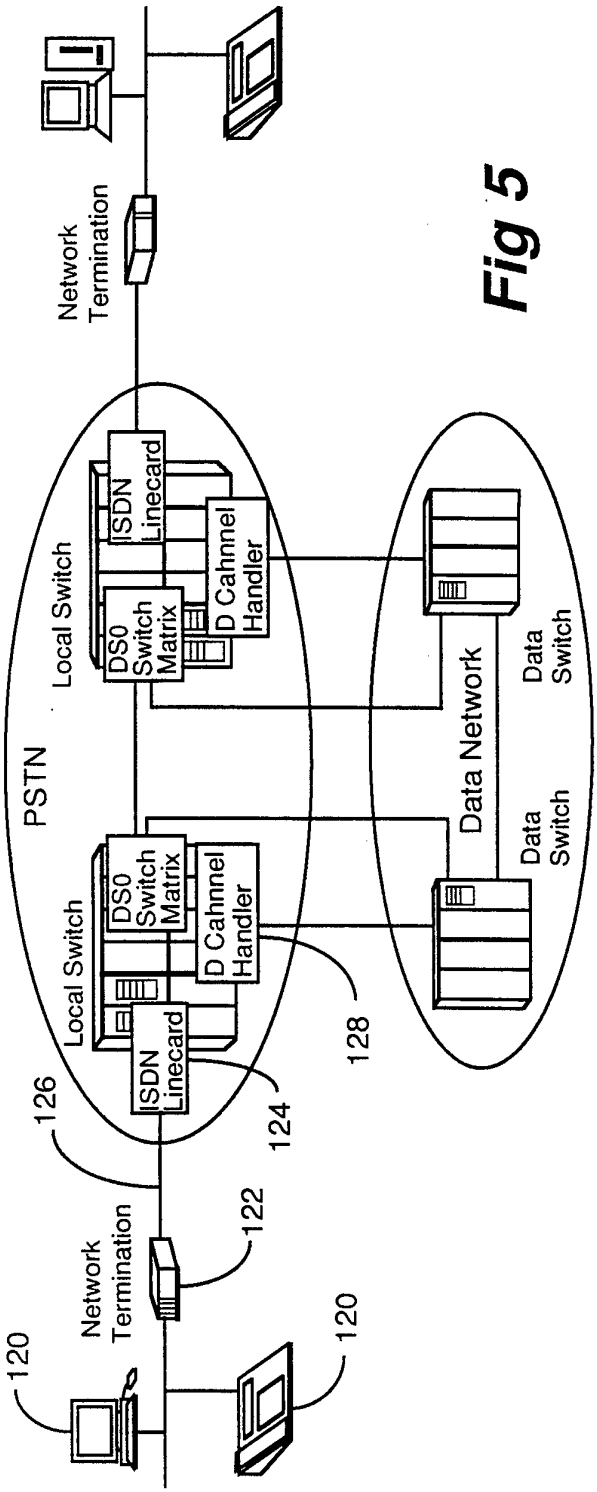
Network Termination
PSTN
Local Switch
ISDN Linecard
DS0 Switch Matrix
D Cahnnel Handler
Data Network
Data Switch
Data Switch
Local Switch
DS0 Switch Matrix
D Cahnnel Handler
ISDN Linecard
128
126
124
122
Network Termination
120
120

Fig 5

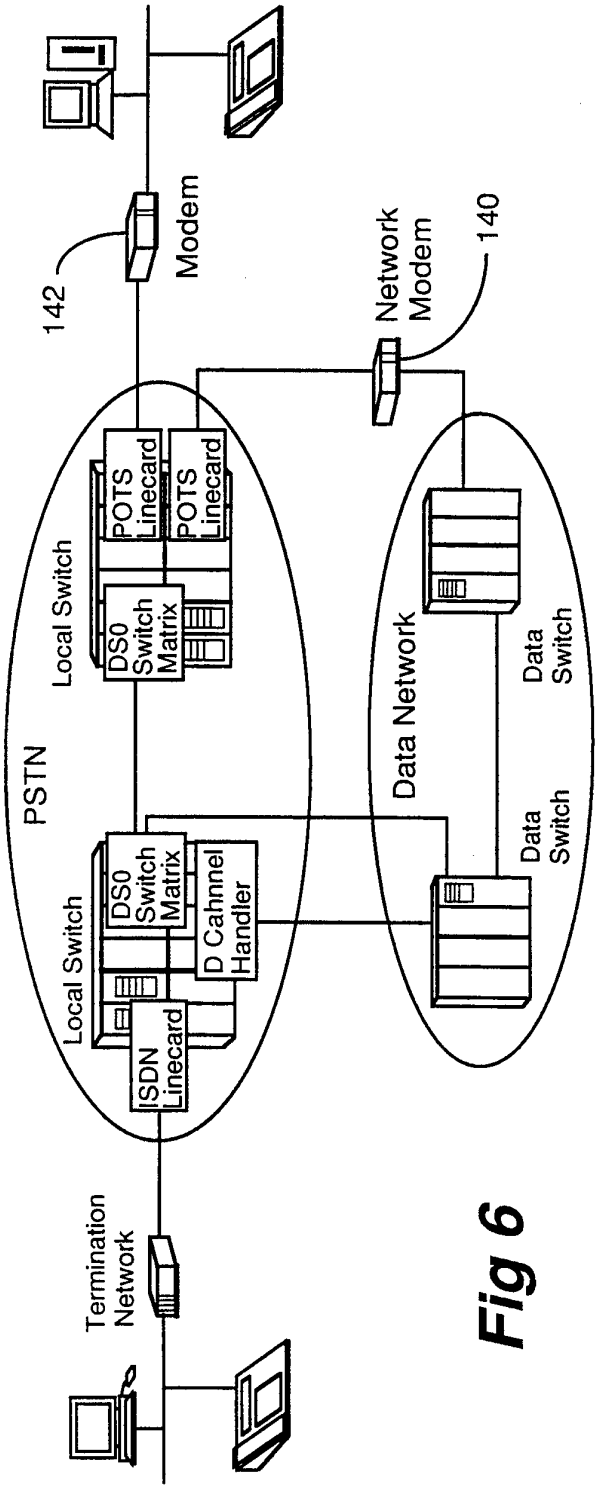
142
Modem
Network Modem
140
PSTN
Local Switch
POTS Linecard
POTS Linecard
DS0 Switch Matrix
Data Network
Data Switch
Data Switch
Local Switch
DS0 Switch Matrix
D Cahnnel Handler
ISDN Linecard
Termination Network

Fig 6

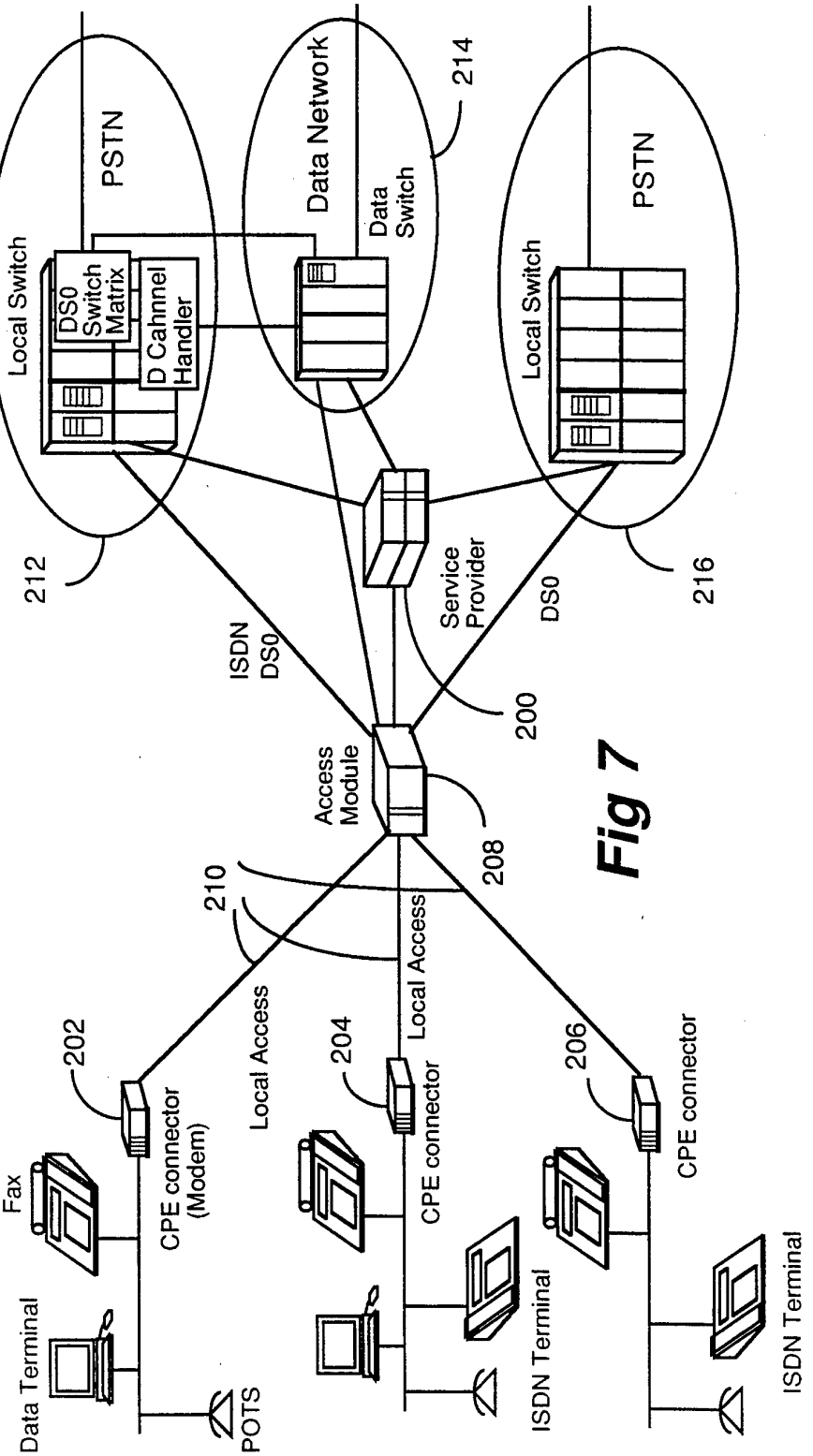
PSTN
Local Switch
DS0 Switch Matrix
D Cahnnel Handler
Data Network
Data Switch
214
PSTN
Local Switch
212
216
Service Provider
ISDN DS0
DS0
200
Access Module
208
210
Local Access
Local Access
202
204
206
CPE connector (Modem)
CPE connector
CPE connector
Fax
Data Terminal
POTS
ISDN Terminal
ISDN Terminal

Fig 7

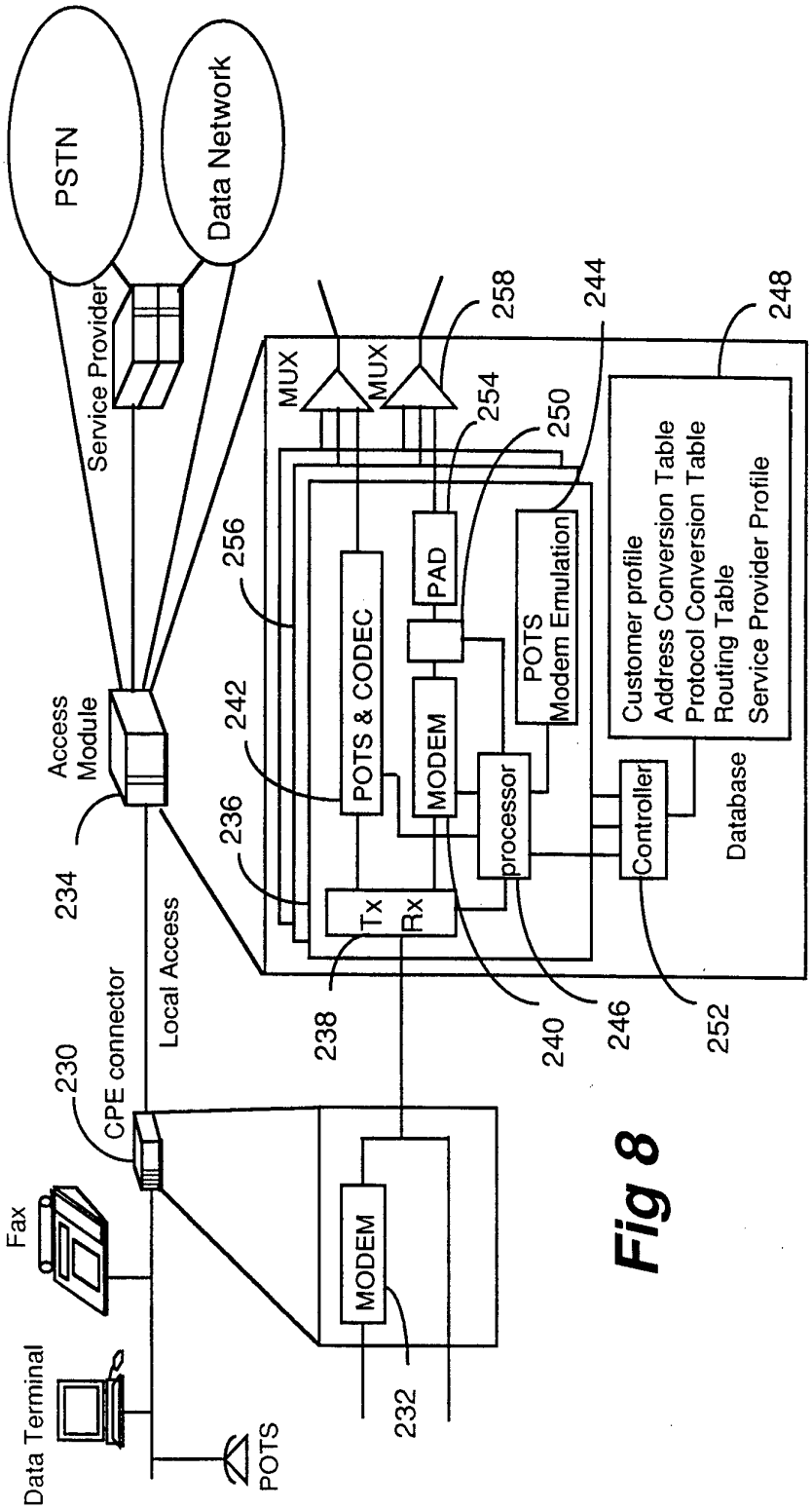
PSTN
Data Network
Service Provider
Access Module
234
Local Access
CPE connector
230
Fax
Data Terminal
POTS
MODEM
232
MUX
MUX
258
254
250
244
248
256
242
236
238
240
246
252
POTS & CODEC
PAD
MODEM
processor
Tx
Rx
POTS Modem Emulation
Controller
Customer profile
Address Conversion Table
Protocol Conversion Table
Routing Table
Service Provider Profile
Database

Fig 8

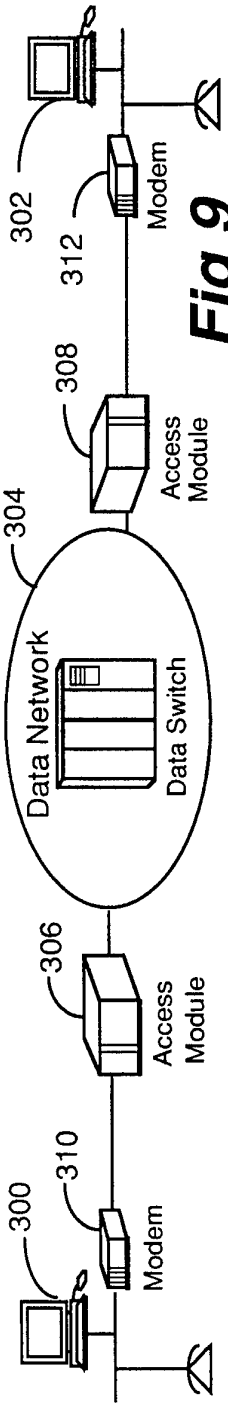

Fig 9

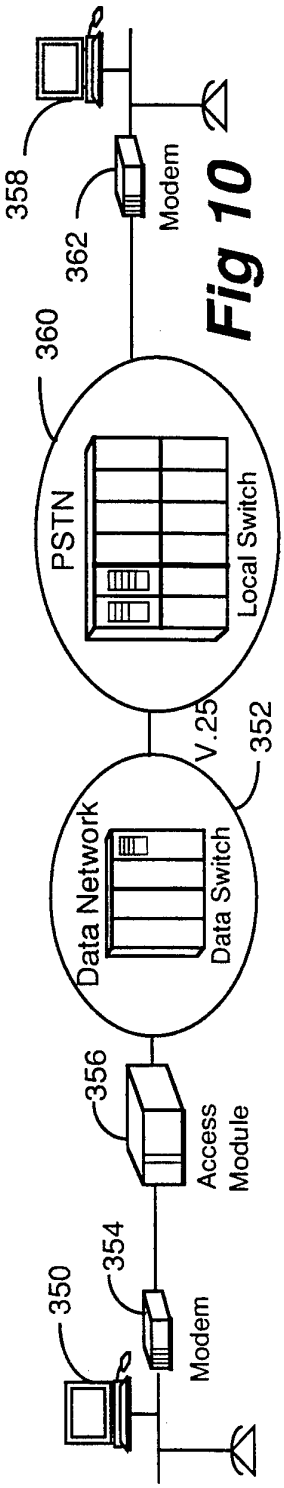

Fig 10

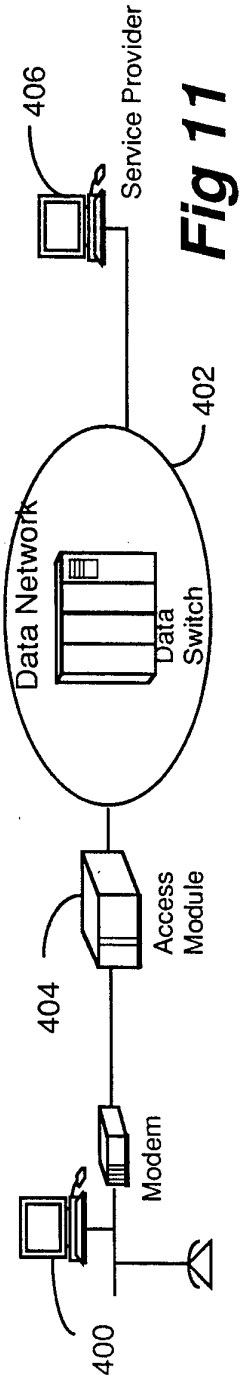

Fig 11

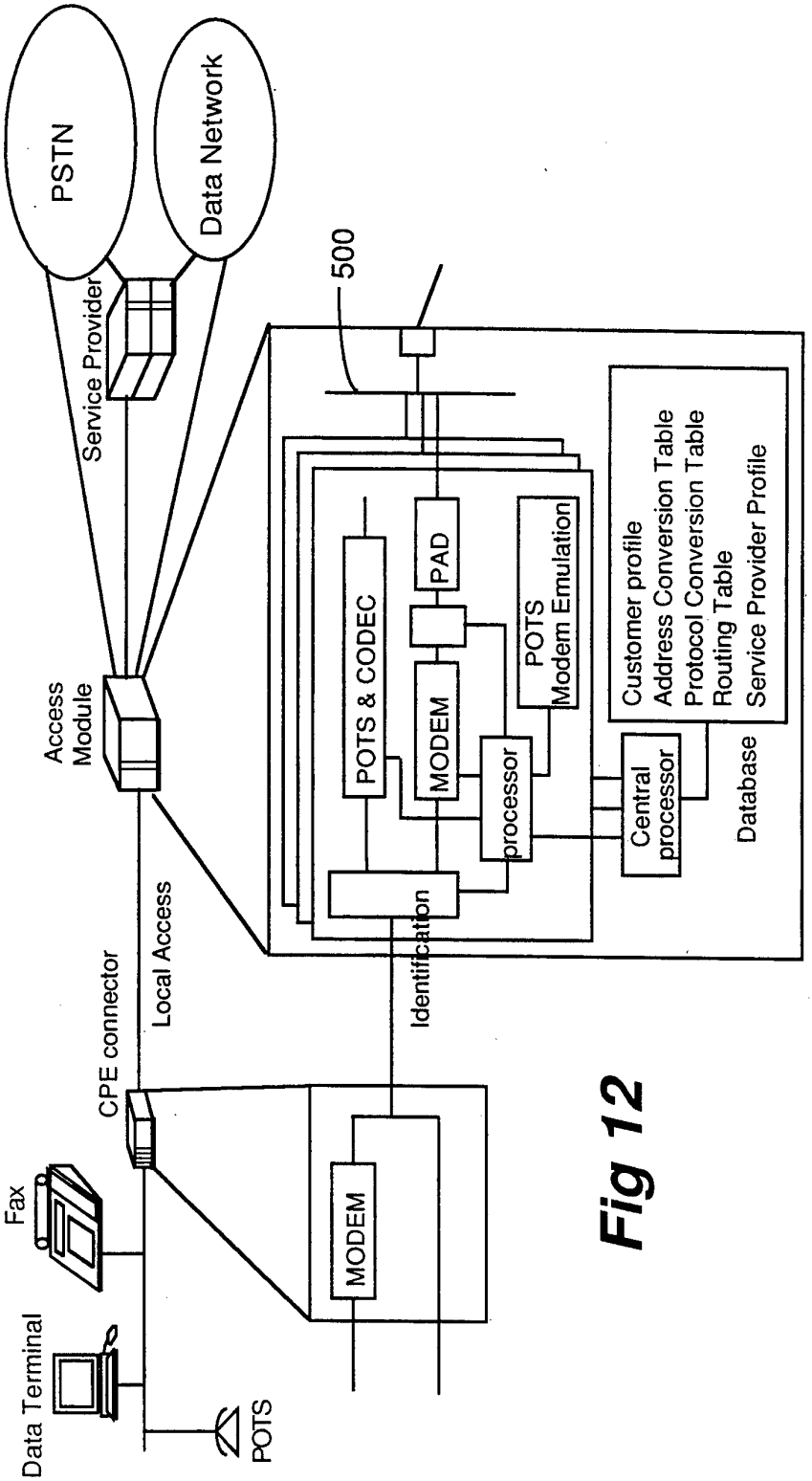
PSTN
Data Network
Service Provider
500
Access Module
POTS & CODEC
PAD
MODEM
POTS Modem Emulation
processor
Central processor
Customer profile
Address Conversion Table
Protocol Conversion Table
Routing Table
Service Provider Profile
Database
Identification
Local Access
CPE connector
MODEM
Fax
Data Terminal
POTS

Fig 12

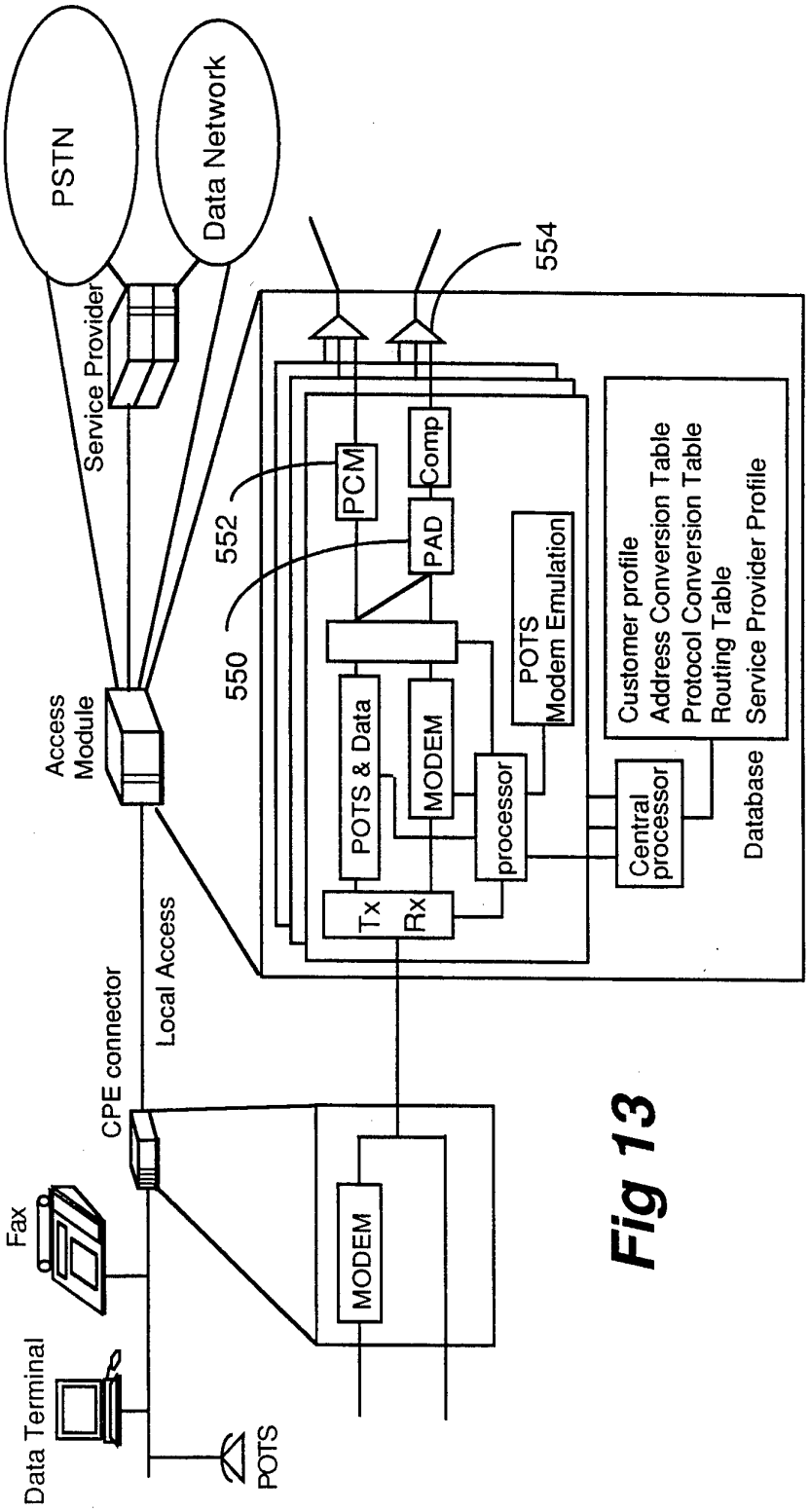
PSTN
Data Network
Service Provider
554
552
550
PCM
Comp
PAD
POTS
Modem Emulation
Customer profile
Address Conversion Table
Protocol Conversion Table
Routing Table
Service Provider Profile
Database
Access Module
POTS & Data
MODEM
processor
Central processor
Tx
Rx
Local Access
CPE connector
MODEM
Fax
Data Terminal
POTS

Fig 13

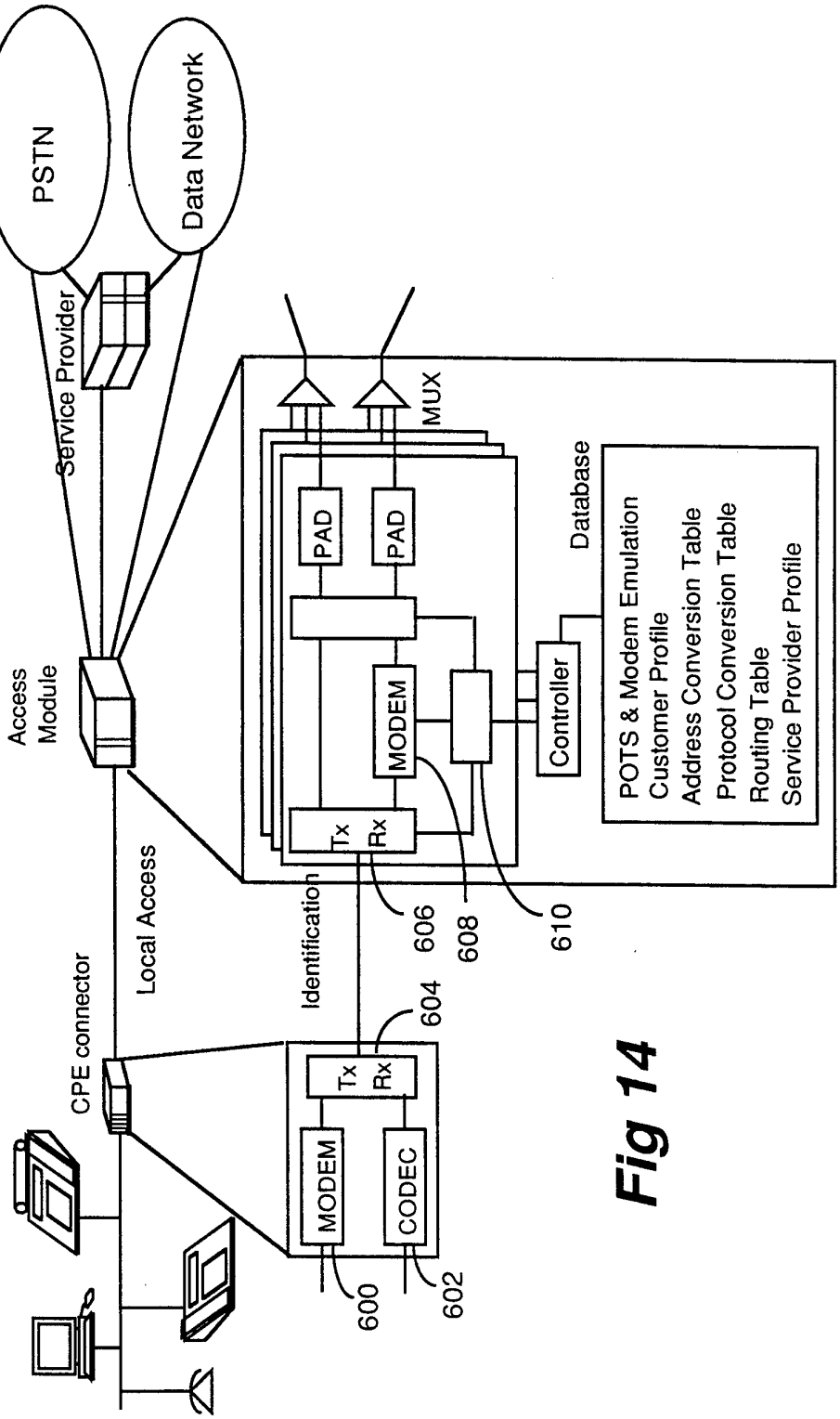
PSTN
Data Network
Service Provider
Access Module
MUX
PAD
PAD
MODEM
Tx
Rx
Controller
Database
POTS & Modem Emulation
Customer Profile
Address Conversion Table
Protocol Conversion Table
Routing Table
Service Provider Profile
606
608
610
Identification
Local Access
CPE connector
604
Tx
Rx
MODEM
CODEC
600
602

Fig 14

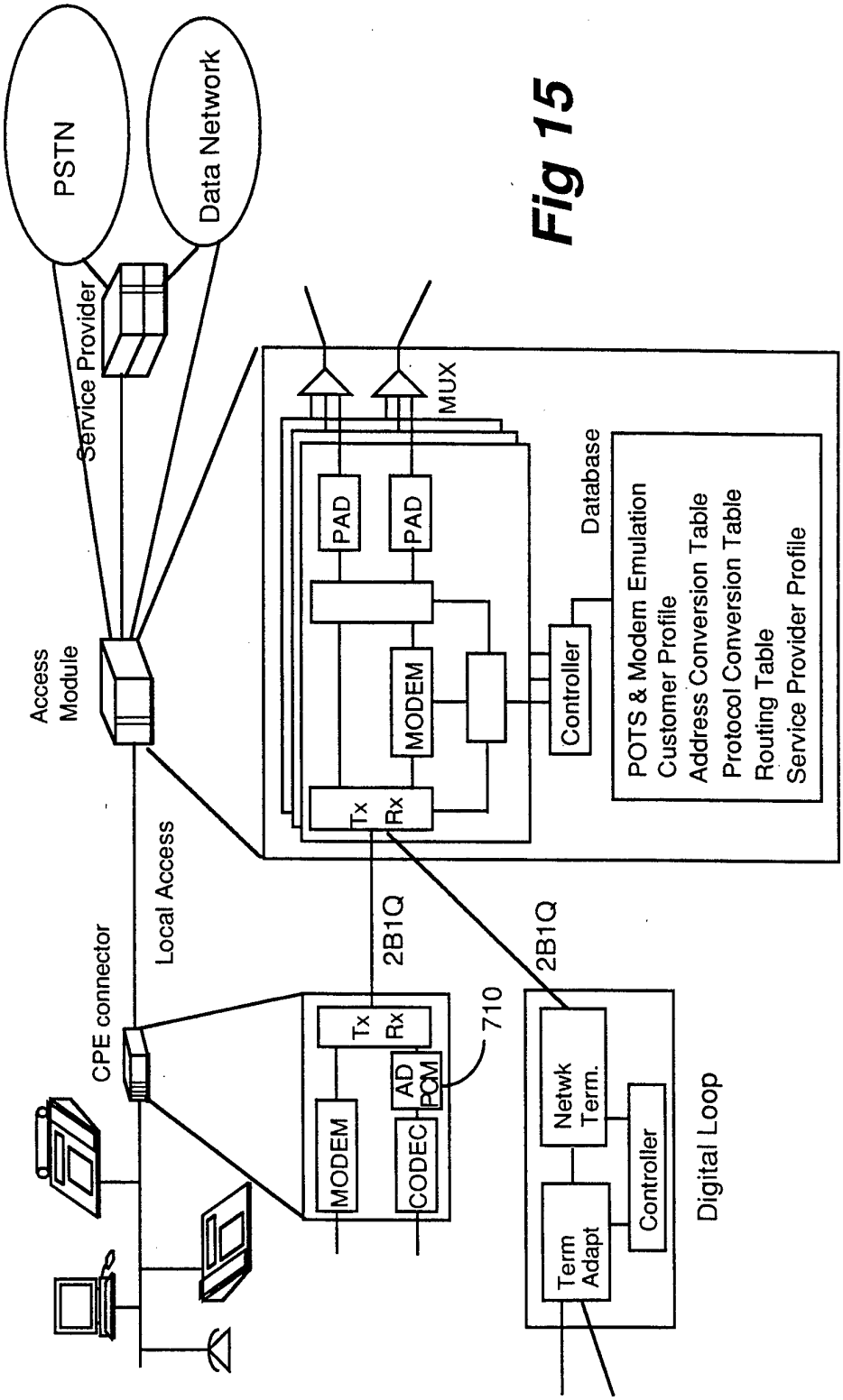
PSTN
Data Network
Service Provider
Access Module
Local Access
CPE connector
MUX
PAD
PAD
MODEM
Tx
Rx
Controller
Database
POTS & Modem Emulation
Customer Profile
Address Conversion Table
Protocol Conversion Table
Routing Table
Service Provider Profile
2B1Q
2B1Q
710
MODEM
CODEC
AD PCM
Netwk Term.
Term Adapt
Controller
Digital Loop

Fig 15

INTERNATIONAL SEARCH REPORT

Inter onal Application No
PCI/CA 96/00460

A. CLASSIFICATION OF SUBJECT MATTER
IPC 6 H04M11/00 H04L12/64

According to International Patent Classification (IPC) or to both national classification and IPC

B. FIELDS SEARCHED

Minimum documentation searched (classification system followed by classification symbols)
IPC 6 H04M H04L H04Q

Documentation searched other than minimum documentation to the extent that such documents are included in the fields searched

Electronic data base consulted during the international search (name of data base and, where practical, search terms used)

C. DOCUMENTS CONSIDERED TO BE RELEVANT

Category °	Citation of document, with indication, where appropriate, of the relevant passages	Relevant to claim No.
X	DE,A,38 04 283 (STANDARD ELEKTRIK LORENZ AG) 24 August 1989 see abstract see column 5, line 36 - column 6, line 13; figure 3	1,2,42
A	---	3-41, 43-68
A	EP,A,0 664 637 (NEWS DATACOM LTD) 26 July 1995 see the whole document	1-68

	-/--	

[X] Further documents are listed in the continuation of box C.

[X] Patent family members are listed in annex.

° Special categories of cited documents :

"A" document defining the general state of the art which is not considered to be of particular relevance

"E" earlier document but published on or after the international filing date

"L" document which may throw doubts on priority claim(s) or which is cited to establish the publication date of another citation or other special reason (as specified)

"O" document referring to an oral disclosure, use, exhibition or other means

"P" document published prior to the international filing date but later than the priority date claimed

"T" later document published after the international filing date or priority date and not in conflict with the application but cited to understand the principle or theory underlying the invention

"X" document of particular relevance; the claimed invention cannot be considered novel or cannot be considered to involve an inventive step when the document is taken alone

"Y" document of particular relevance; the claimed invention cannot be considered to involve an inventive step when the document is combined with one or more other such documents, such combination being obvious to a person skilled in the art.

"&" document member of the same patent family

Date of the actual completion of the international search	Date of mailing of the international search report
10 December 1996	20.12.96
Name and mailing address of the ISA European Patent Office, P.B. 5818 Patentlaan 2 NL - 2280 HV Rijswijk Tel. (+ 31-70) 340-2040, Tx. 31 651 epo nl, Fax (+ 31-70) 340-3016	Authorized officer Mikkelsen, C

Form PCT/ISA/210 (second sheet) (July 1992)

INTERNATIONAL SEARCH REPORT

Inte· onal Application No
PCI/CA 96/00460

C.(Continuation) DOCUMENTS CONSIDERED TO BE RELEVANT

Category °	Citation of document, with indication, where appropriate, of the relevant passages	Relevant to claim No.
A	ANNUAL REVIEW OF COMMUNICATIONS, vol. 48, 1 January 1994, pages 816-823, XP000543229 YOVNELLO C: "INTRODUCTION TO PERSONAL COMMUNICATIONS SERVICES" see page 819, left-hand column, line 6 - right-hand column, line 21; figure 2 see page 820, right-hand column, last paragraph ---	1-68
A	TELCOM REPORT, vol. 18, no. 4, 1 July 1995, pages 177-179, XP000527704 MAHER A: "AUFBRUCH IN DIE MULTIMEDIA-WELT" see figure 2 -----	1,42

Form PCT/ISA/210 (continuation of second sheet) (July 1992)

INTERNATIONAL SEARCH REPORT

Information on patent family members

Inter onal Application No
PCT/CA 96/00460

Patent document cited in search report	Publication date	Patent family member(s)		Publication date
DE-A-3804283	24-08-89	NONE		
EP-A-0664637	26-07-95	AU-A-	1029795	03-08-95
		CA-A-	2140392	22-07-95
		JP-A-	8046725	16-02-96