April 26, 1927.

1,626,484

W. J. SMITH

PUMP

Filed Nov. 24, 1926

3 Sheets-Sheet 1

Fig. 1.

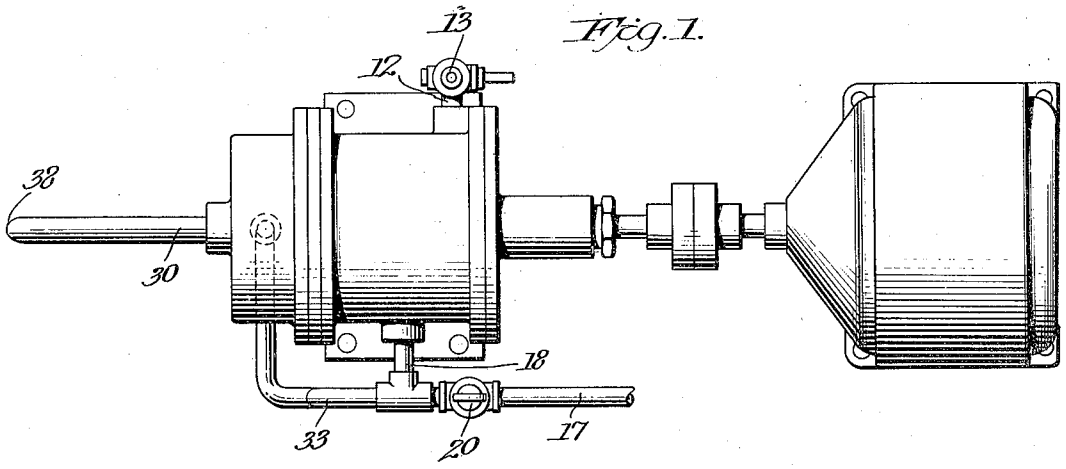

Fig. 2.

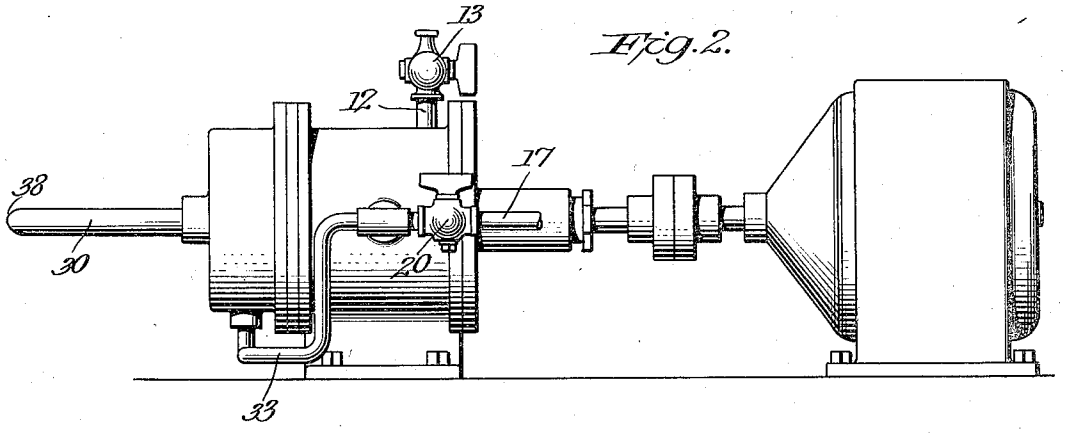

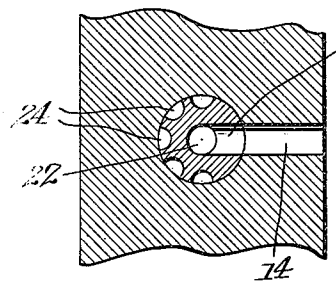

Fig. 6.

Inventor

William J. Smith.

By Daniel H. Mead

Attorney

April 26, 1927.

1,626,484

W. J. SMITH

PUMP

Filed Nov. 24, 1926

3 Sheets-Sheet 2

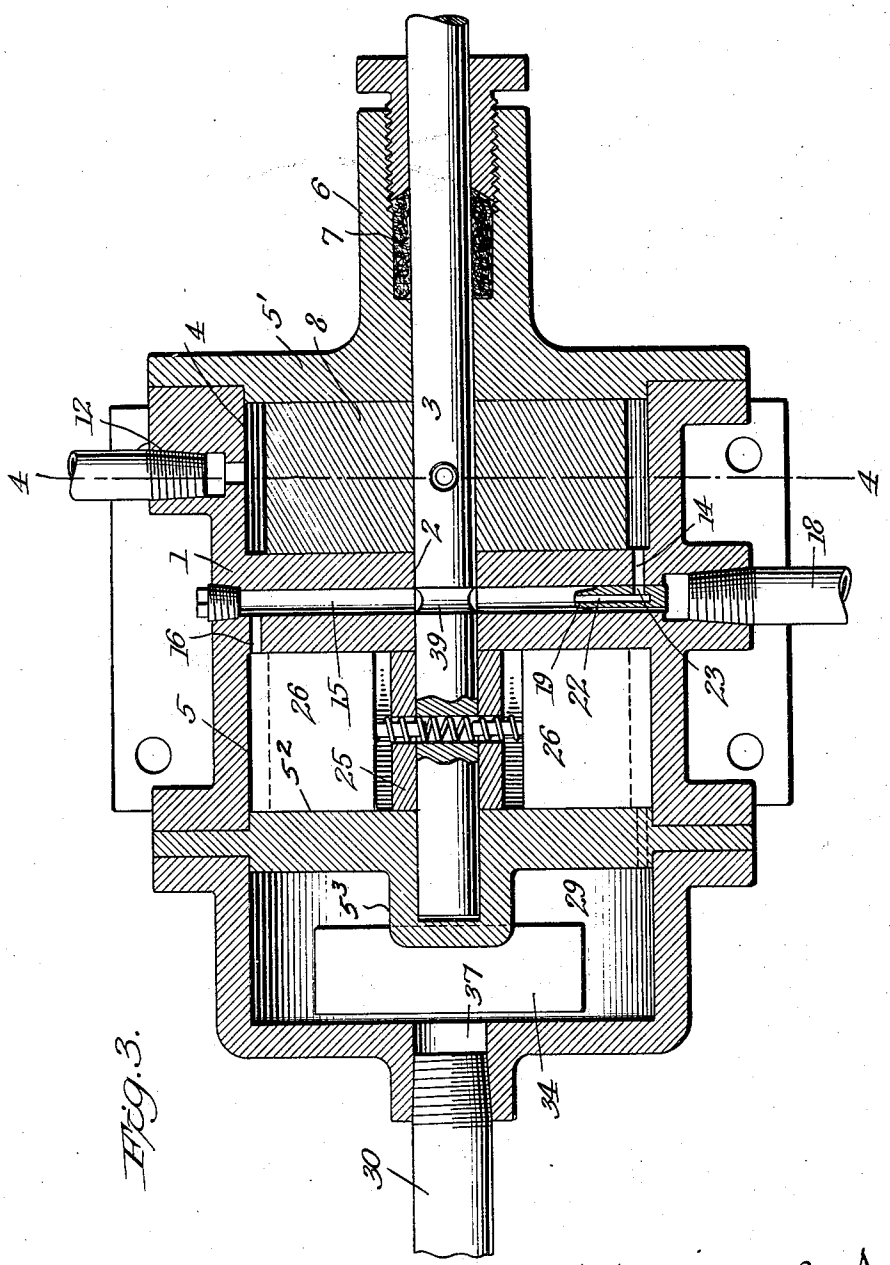

Fig. 3.

Inventor

William J. Smith

By Lemuel W. Meek

Attorney

April 26, 1927. 1,626,484

W. J. SMITH

PUMP

Filed Nov. 24, 1926 3 Sheets-Sheet 3

Fig. 4.

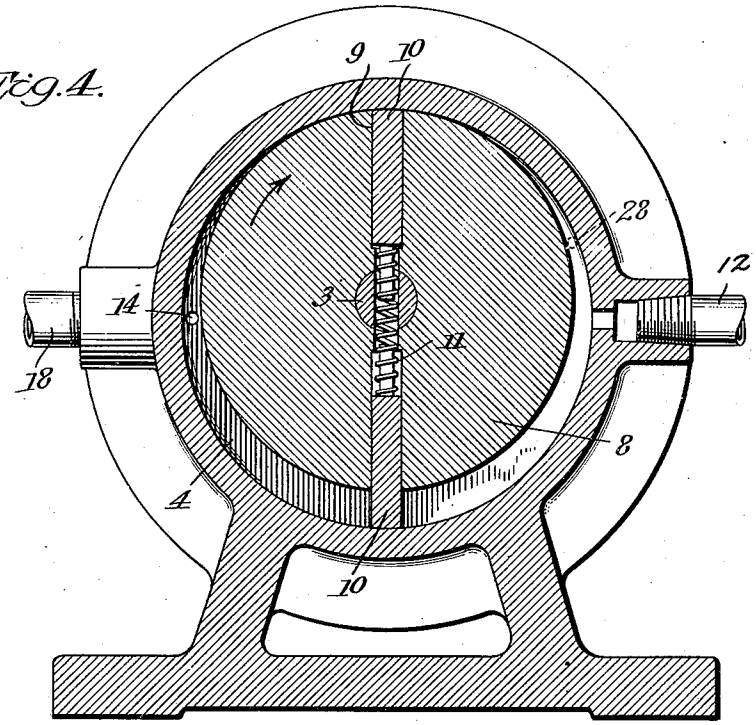

Fig. 5.

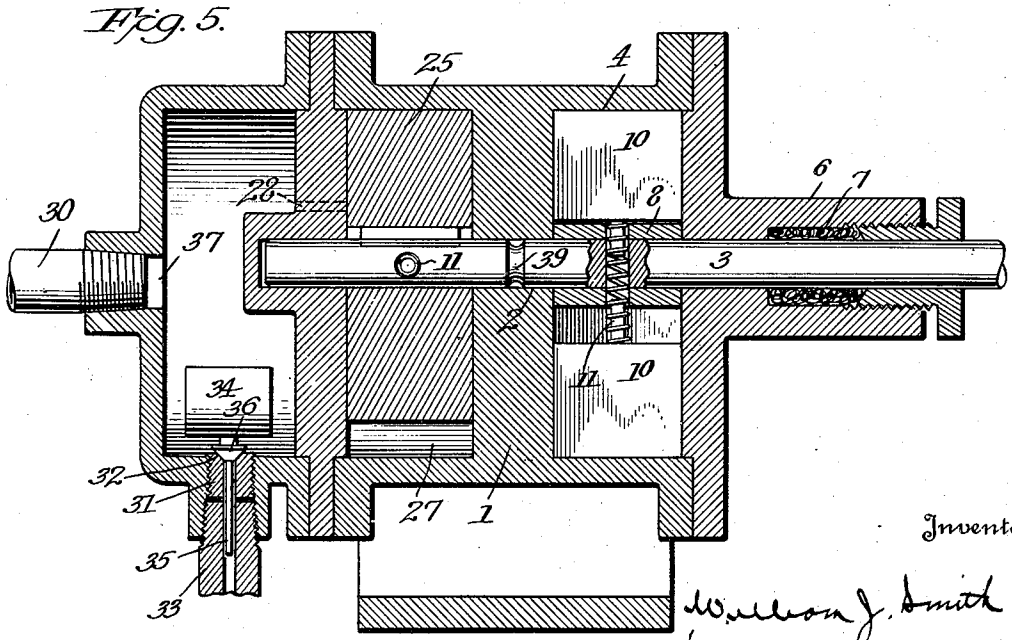

Inventor

William J. Smith

By Samuel H. Mead

Attorney

Patented Apr. 26, 1927. 1,626,484

UNITED STATES PATENT OFFICE.

WILLIAM J. SMITH, OF PHILADELPHIA, PENNSYLVANIA, ASSIGNOR TO R. JAMES McCAFFREY, OF PHILADELPHIA, PENNSYLVANIA.

PUMP.

Application filed November 24, 1926. Serial No. 150,480.

This invention relates to pumps, and it relates particularly to that class of pumps which include cylinders in which are eccentrically disposed rotary pistons each bearing at one point on the interior face of its cylinder, the pistons being provided with slidable vanes the outer ends of which are maintained constantly in contact with the inner faces of the cylinders.

The object of the invention is to provide a pump of the general character referred to, in which a plurality of cylinders and pistons shall be so aggrouped and connected as to draw into the pump two or more gases, or a gas and a substance in a finely divided condition or spray, commingle the two, put the mixture under pressure, and then expel the mixture through a contracted discharge opening.

Another object of the invention is to provide in a pump of the kind referred to means whereby when, for instance, a liquid is introduced into the pump and mixed with a gas, any portion of the liquid which may be in sufficiently large globules to cause it to separate from the mixture, and to precipitate in the pump, shall automatically be removed from the pump, conveyed to the source of supply of the liquid, and utilized.

A further object of the invention is to provide in the pump such a construction and relative disposal of the parts that, when a liquid is introduced in the form of a spray, combined with a gas, compressed, etc., the liquid shall be brought into contact with the bearing of the driving shaft of the pump in such manner as to serve to lubricate the shaft continuously in the operation of the pump.

The pump hereinafter described and claimed is adapted for drawing in, mixing, putting under pressure, and then discharging in the form of a spray or vapor a great variety of gases and fluids and solids in a finely divided condition. By its form it is particularly adapted for use in supplying gaseous fuel for heating plants, etc., for the reason that all the principal working parts are rotary, and may, therefore, be operated at the required high speed without vibration, without undue wear of the contacting parts, and without noise.

In the following description the pump is described as operating to combine and compress a mixture of oil in the form of spray or vapor, and air, to produce a fuel for heating plants. It is not the intention to thus limit the scope of the invention, as an understanding of it will make clear the fact that it is capable of use in combining and compressing a great variety of gases with fluids, or with finely divided solid substances.

The invention consists of a pump having the generic and specific features of construction and arrangement of parts substantially as hereinafter described and claimed.

The preferred construction of the pump and its coacting parts is shown in the accompanying drawings, in which:

Figure 1 is a plan view of the pump, showing an operating electric motor attached thereto.

Figure 2 is a side view of the pump and motor.

Figure 3 is a central horizontal sectional view of the pump.

Figure 4 is a vertical sectional view taken on the line 4—4 of Figure 3.

Figure 5 is a central vertical sectional view of the pump, and

Figure 6 is a detail view of the oil injector employed.

As herein shown, the working parts of the pump are attached to and sustained by a standard or frame, consisting principally of the main upright, central portion 1, having therein an opening 2 forming a bearing for the operating shaft 3. The standard has formed in it, on opposite sides, the annular chambers 4, 5, which form the principal parts of the cylinders in which the rotary pistons employed are located.

The outer face of the chamber 4 is formed by a removable plate 5′ which has on it a hub 6 formed with an opening through it for receiving the shaft 3 and forming a bearing therefor. Arranged in the hub 6 and surrounding the shaft is a stuffing box 7 by which the escape of air placed under pressure in the chamber 4 is prevented from escaping between the shaft and the hub.

The shaft 3 extends through the chamber 4 at a point a short distance above the center of the chamber, and secured to the shaft and located in the chamber is the rotatable annular piston 8, which is of a diameter to bear against the upper face of the chamber. The piston 8 has in it the radial grooves 9, in which are located the slidable vanes 10, the

outer ends of which are maintained in contact with the wall of the chamber by means of a spring 11 extending through an opening in the shaft and bearing on the inner ends of the respective vanes.

Extending through the side wall of the chamber 4 and communicating with the space between the piston 8 and the chamber is an air pipe or conduit 12 provided with means, such as a valve 13, by which the quantity of air admitted to the chamber 4 is governed. Air admitted through the conduit 12 is successively contacted with by the vanes of the piston 8 which rotates in the direction indicated by the arrow in Figure 4. By this means the air is put under pressure as it is carried by the vanes to a point opposite the place of admission, where it is conducted through an opening 14 which communicates with a conduit 15 formed in the central portion 1 of the standard.

At the point of discharge of the air under pressure into the conduit 15 oil is introduced, commingled with the air, and forced through the conduit 15, and thence through an opening 16 into the compression chamber 5 in the form of a spray. The commingling of the oil with the air under pressure is accomplished by means of an injector 19 of the form particularly shown in Figures 3 and 6 of the drawing. This is connected to an oil supply pipe having the two branches 17 and 18, and regulating means, such as the valve 20. The branch 17 of the oil pipe is connected with a tank or reservoir of oil (not shown) and the branch 18 is connected to one end of the conduit 15 in the standard.

The nozzle 19 has a central air passage 22, and a branch air passage 23, and is secured to the end of the branch 18 of the oil supply pipe. The nozzle is so positioned that the branch passage 23 is joined to the opening 14 through which air is discharged under pressure from the chamber 4. The outer face of the nozzle 19 is provided with a series of grooves 24 which, when the nozzle is in position in the conduit 15, form passages around the nozzle, permitting flow of oil from the oil supply pipe to the conduit 15. As air under pressure is forced through the nozzle the flow of oil from the oil supply pipe is induced, and the air and oil are projected into the conduit 15 in the form of spray, the required comparative proportions of air and oil to form any desired mixture being determined by regulation of the valves 13 and 20.

The inner face of the chamber 5 is formed by the face of the standard 1, and the outer face thereof is formed by the plate 5^2. The plate 5^2 also forms a partition separating the chamber 5 and the storage chamber 29. Formed with the plate 5^2 is a central projection 5^3 having an opening therein forming a journal for the inner end of the shaft 3.

The compression chamber 5 in which is located an eccentrically mounted rotary piston having slidable vanes, corresponding to those in the chamber 4 and operating in a similar manner, receives the mixture of air and oil from the conduit 15 through the passage 16 in the standard. The mixture is carried by the vanes 26 of the piston 25 through the crescent-shaped space 27 between the rotary piston and the wall of the compression chamber 5 to the contracted end of such space, thus putting it under a high degree of compression, and is then discharged through a small passage 28 (shown by dotted lines in Figure 5) into a chamber 29. The chamber 29, which receives the mixture and forms a communication between the compression chamber 5 and the discharge nozzle 30, is provided with means whereby any oil in a liquid state carried by the mixture in its passage through the chamber and precipitated shall automatically be removed from the bottom of the chamber and conducted to the oil supply pipe. To this end a screw plug 31 having a conical valve seat 32 in its end is introduced into the bottom of the wall of the chamber 29. The plug has a central opening in it, and connected to the plug and communicating with the opening is a pipe 33, which at its other end is connected to the oil supply pipe. Located in the chamber 29 is a hollow float 34 provided with a stem 35 which projects into the opening in the screw plug 31, and has on it a valve 36 conforming to the seat 32 in the plug 31.

From the described construction and disposal of the parts it will be clear that when the pump is in operation, and any considerable quantity of oil accumulates in the bottom of the chamber 29, the valve 36 will be unseated by the action of the float. In this way a communication is established through the central opening in the plug 31 and the pipe 33 between the bottom of the chamber 29 and the oil supply pipe. Thus any oil deposited by precipitation from the mixture in the chamber 29 will, when the valve 36 is unseated, be drawn into the oil supply pipe by the action of the injector 19 and be again mixed with air, vaporized, compressed, etc.

The pump hereinbefore described is of a construction involving no working parts liable to require repair or replacement because of wear due to long continuous operation. The principal bearing 2 of the operating shaft is in the upright portion 1 of the standard of the pump and is inaccesible. Ordinarily the lubrication of this bearing, involving the taking down of a large part of the pump to reach it, would present a considerable difficulty. The described construction and arrangement of the pump incidentally affords a simple and reliable manner of lubricating the bearing in question.

The shaft 3 is provided at that portion of it which extends across the passage 15 in the standard with a circumferential groove 39 of a width corresponding to that of the passage. Consequently the mixture of air and oil projected through the passage 15 by the action of the injector 19 passes through the groove 39, around and contacting with the shaft, and during the operation of the pump a sufficiently large quantity of the oily mixture is retarded by the shaft to afford ample lubrication for its bearing.

The outer face of the chamber 29 has in it an opening 37 with which the nozzle 30 is connected. The discharge end 38 of the nozzle is preferably contracted in order to retard the flow of the mixture of air and gas passing through it, and in this way to cause the mixture to be discharged from the pump in a small jet under high pressure, thus aiding in the production of a mixture in the form of a spray containing minute particles of oil commingled with air. In practice it is found that air and oil commingled, compressed, freed from oil capable of precipitation, and finally discharged through a contracted discharge opening emerges in substantially gaseous form. Consequently, when the mixture is ignited, the resulting combustion is substantially complete and the quantity of free carbon liberated is negligible.

I claim:

1. A pump of the kind described comprising an air compression chamber having therein an eccentric rotary piston provided with radially disposed slidable vanes, a compression chamber having therein an eccentric rotary piston provided with slidable radially disposed vanes, a conduit connecting the chambers, an injector having air and oil passages located in the conduit, an oil supply pipe connected to the oil passages, a connection between the air passage and the air compression chamber, and a receiving chamber communicating with the compression chamber, and automatically operated means for withdrawing precipitated oil from the receiving chamber.

2. In a pump of the kind described, a standard having chambers formed in its opposite sides, removable plates forming the outer faces of the chambers and having openings forming bearings for a shaft, rotary pistons connected to the shaft and arranged in the respective chambers, an inlet conduit formed in the standard, an injection nozzle arranged in the conduit, a passage connecting one of the chambers and the injector, and a passage connecting the conduit and the opposite chamber.

3. In a pump of the kind described, a standard having chambers formed in its opposite sides, removable plates forming the outer faces of the chambers and having openings forming bearings for a shaft, rotary pistons connected to the shaft and arranged in the respective chambers, an inlet conduit formed in the standard, an injector nozzle arranged in the conduit, the nozzle being provided with a central opening, a branch opening connected to the central opening said nozzle having longitudinally extending grooves in its outer face, a passage connecting one of the chambers with the branch opening in the injector nozzle, and a passage connecting the conduit in the standard and the opposite chamber.

4. A pump of the kind described comprising a standard having a conduit extending therethrough and a shaft bearing at an angle to the conduit, a piston shaft arranged in the bearing and extending through the conduit, rotary pistons mounted on the shaft the portion of the shaft located in the conduit being provided with a circumferential groove, and means for forcing a fluid mixture through the conduit.

5. A pump of the kind described comprising two chambers having rotary vaned pistons therein, a conduit connecting the chambers, an injector located in the conduit and communicating with one of the chambers and with the conduit, a supply pipe connected to the injector, a receiving chamber connected to the chambers containing the pistons, an opening in the lower portion of the receiving chamber, a float valve governing the opening, and a connection between the opening and the supply pipe connected to the injector.

In testimony whereof I affix my signature.

WILLIAM J. SMITH.