(No Model.)

2 Sheets—Sheet 1.

C. LUDOVICI.

ELEVATOR INDICATOR.

No. 455,947. Patented July 14, 1891.

Fig. 1.

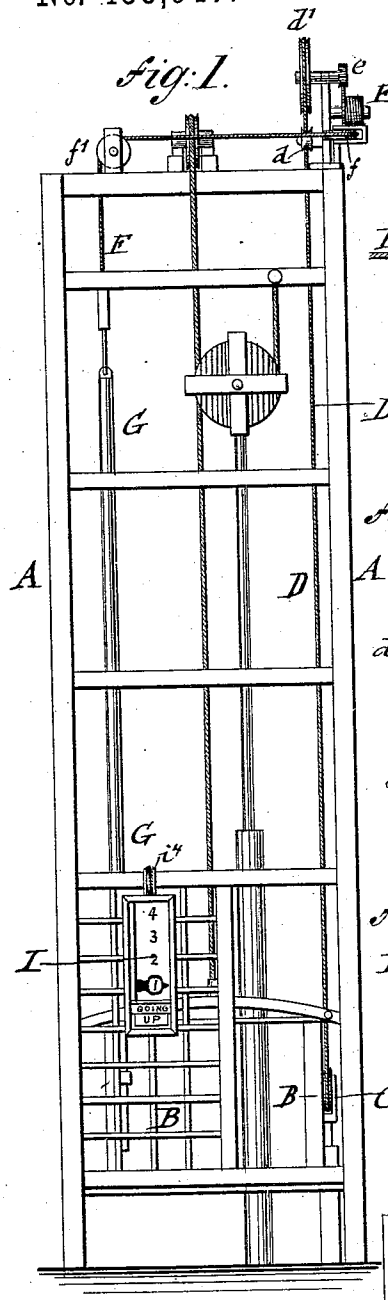

Fig. 4.

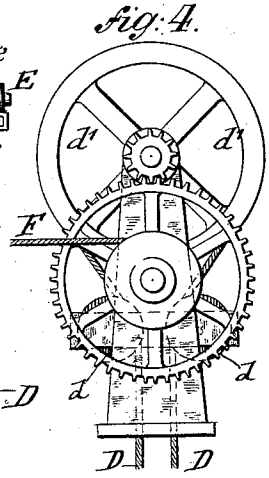

Fig. 5.

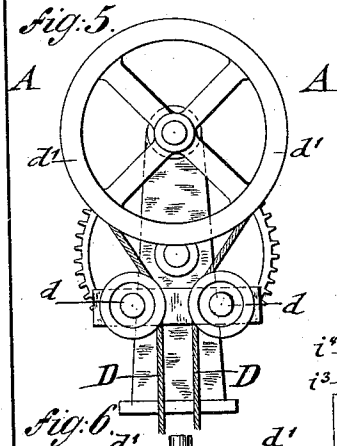

Fig. 6.

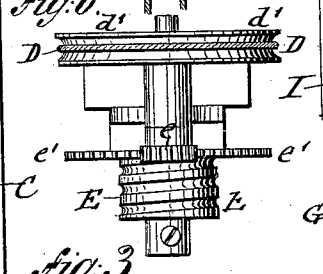

Fig. 2.

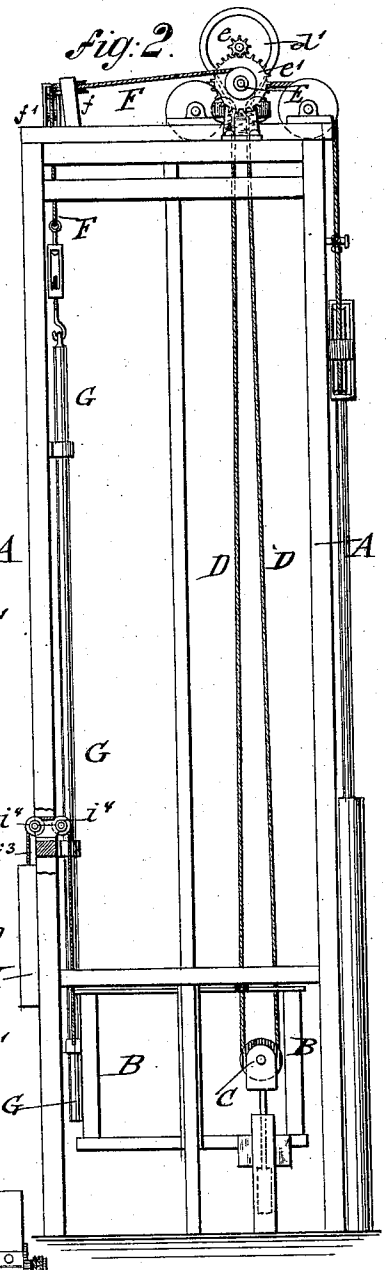

Fig. 3.

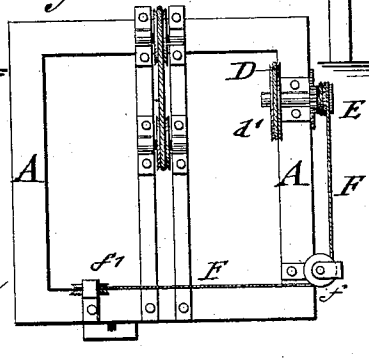

WITNESSES:

A. Schehl.

Charles Schroeder

INVENTOR

Charles Ludovici

BY Goepel & Paegener

ATTORNEYS.

THE NORRIS PETERS CO., PHOTO-LITHO., WASHINGTON, D. C.

(No Model.) 2 Sheets—Sheet 2.

C. LUDOVICI.

ELEVATOR INDICATOR.

No. 455,947. Patented July 14, 1891.

Fig: 9

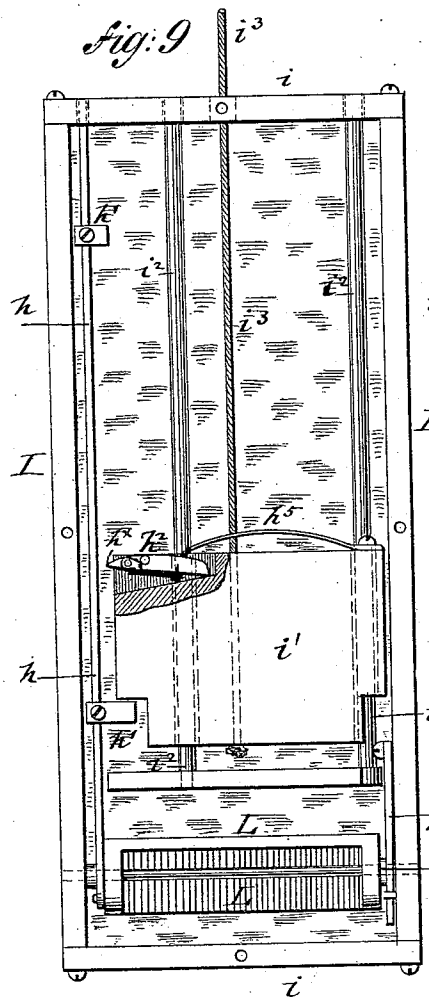

Fig: 8

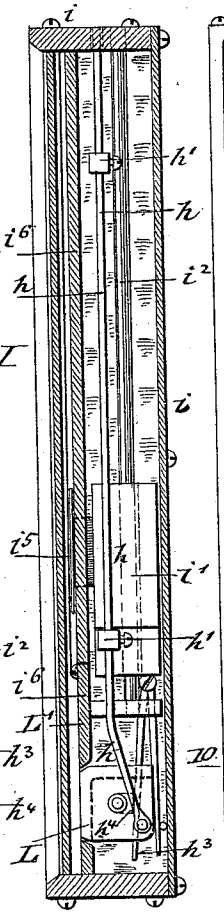

Fig: 7

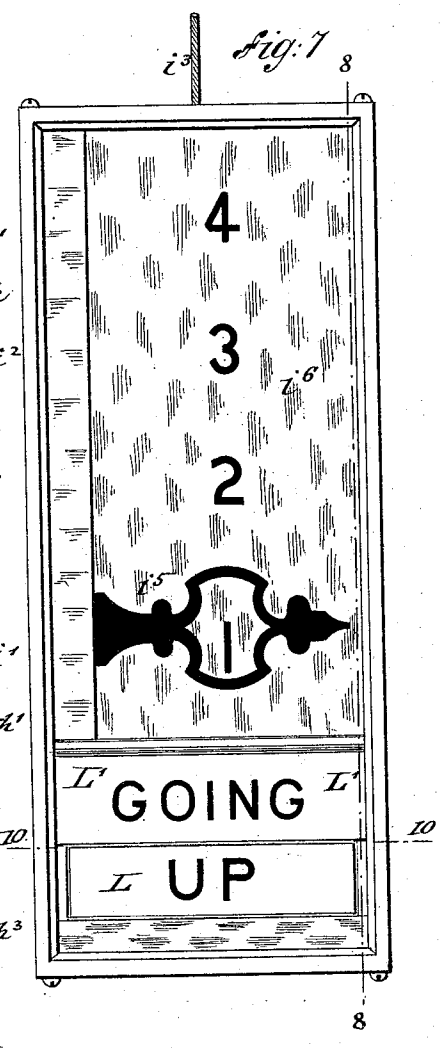

Fig: 10.

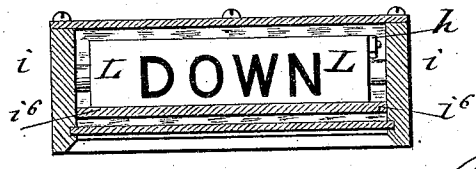

WITNESSES:
A. Schehl.
Charles Schroeder

INVENTOR
Charles Ludovici
BY Goepel & Lageman
ATTORNEYS

THE NORRIS PETERS CO., PHOTO-LITHO., WASHINGTON, D. C.

UNITED STATES PATENT OFFICE.

CHARLES LUDOVICI, OF NEW YORK, N. Y.

ELEVATOR-INDICATOR.

SPECIFICATION forming part of Letters Patent No. 455,947, dated July 14, 1891.

Application filed February 28, 1891. Serial No. 383,262. (No model.)

To all whom it may concern:

Be it known that I, CHARLES LUDOVICI, of the city, county, and State of New York, a citizen of the United States, have invented certain new and useful Improvements in Indicators for Elevators, of which the following is a specification.

This invention relates to an improved indicating device for elevators, by which the position and movement of the car are indicated in a reliable manner on the different floors of a building, the indicating devices being arranged to indicate whether the car is going up or down, and adapted to be adjusted for work for any number of floors, in case some of the floors are to be omitted in running the elevator; and the invention consists of an indicator for elevators, which is operated by the ascending or descending motion of the car, and an endless rope which is loosely attached to said car and passed over a weighted pulley and over guide-wheels at the top part of the elevator-frame, so as to operate by a gear-wheel transmission a second rope that is wound upon a drum and connected to a vertically-guided indicator-rod, which is connected with all the indicating devices located on the different floors. Each indicator is provided with a weight that is connected to the vertically-movable indicator-rod, said weight being provided with a pointer moving along the face-plate of the indicator on which the numbers of the different floors are arranged. The weight is provided with means for engaging the projecting stop of a slide-rod that is guided in the casing of the indicator, the slide-rod being connected to an oscillating sign-plate, which is turned on its axis by the ascending or descending motion of the weight, so as to indicate whether the elevator is going up or down. The stops on the slide-rod are adjustable, so as to adapt the same to the number of stories through which the elevator runs.

In the accompanying drawings, Figure 1 represents a front elevation of an elevator with my improved indicating devices. Fig. 2 is a side elevation, and Fig. 3 is a plan of Fig. 1. Figs. 4, 5, and 6 are details of the transmitting mechanism by which the motion of the car is transmitted to the indicator-rod by which the indicating devices in the different stories are operated. Fig. 7 is a front elevation of one of my improved indicators, drawn on a larger scale. Fig. 8 is a transverse section on line 8 8, Fig. 7. Fig. 9 is a rear elevation, parts being broken away; and Fig. 10, a horizontal section on line 10 10, Fig. 7.

Similar letters of reference indicate corresponding parts.

Referring to the drawings, A represents the frame of a passenger or freight elevator, which is made of any approved construction. B is the car or platform of the same, which is suspended from a wire rope and operated by hydraulic or other appliances.

At the lower part of the elevator-frame is located a weighted or spring-actuated idler-pulley C, over which is passed an endless rope D, which is guided by tension-rollers d d and a grooved pulley of larger size, so as to turn by friction the pulley d' and the shaft of the same and operate by transmitting gear-wheels e e' a spirally-grooved drum E, which is supported in suitable bearings on the top part of the elevator-frame A. The endless rope D is loosely attached to the car B, so as to be operated by the same.

To the spirally-grooved drum E is applied a second rope F, which is conducted over suitable guide-pulleys f f', located on the top part of the elevator-frame A to a vertically-guided indicator-rod G, that extends nearly throughout the full height of the elevator-frame, as shown clearly in Figs. 1 and 2. The weighted indicator-rod G is moved in upward direction by the upward motion of the car and the intermediate transmitting devices, and in downward direction by the downward motion of the car, the motion of the indicator-rod being in proportion to the motion of the car. The indicator-rod G is connected by chains or ropes to indicators I, of which one is arranged on the elevator-frame for each story.

The construction of one of the indicators I is shown in detail in Figs. 7 to 10, it being composed of an exterior casing i and an interior weight i', which is guided on fixed rods i^2 and attached to the rope i^3, that passes over pulleys i^4, located in the wall inclosing the elevator-shaft, as shown in Fig. 2. The weight i' is provided with a pointer or index i^5, that moves over the face-plate i^6 of the indicator, said face-plate being provided with as many fig-

ures from one upward as there are stories in the building for which the elevator is arranged. At one side of the indicator-casing *i* is guided a rod *h*, which is provided with adjustable stops *h' h'*, of which the lower stop *h'* is engaged by the recessed lower part of the weight *i*, while the upper stop *h'* is engaged by a pivoted and spring-actuated pawl h^2 at the upper part of the weight *i*. The lower end of the slide-rod *h* is pivoted eccentrically to one end of an angular sign-plate L, which is located at the lower part of the indicator-casing and pivoted to the side wall of the casing *i*. To one face of said angular sign-plate L is applied the word "Up," while the other face carries the word "Down."

Between the angular sign-plate L and the face-plate i^6 of the indicator is arranged a fixed sign-plate L', on which the word "Going" is placed. A spring h^3 presses against a heel h^4 on one of the pivots of the angular sign-plate L and holds it in the position to which the same is set by the action of the slide-rod *h*. The vertically-movable weight *i*, acting on the stops *h'* of the slide-rod *h*, operates the latter and by the same the sign-plate L. When the weight *i* acts on the lower stop ascending, the sign-plate L is turned so as to exhibit the word "Up," while when the spring-actuated pawl h^2 is acting on the upper stop *h'* of the slide-rod *h* the latter is lifted and the sign-plate turned so as to indicate the word "Down." In other words, the ascending or descending weight sets the sign-plate so as to indicate the motion on which the car enters and before arriving at its uppermost or lowermost positions. In case the elevator is not running to all the stories it will be necessary to adjust the upper stop *h'* at a lower point on the slide-rod *h* in proportion to the number of stories through which the car runs. If, for instance, the elevator is to run only through three stories of the building, the upper stop is adjusted on the rod *h* at about the height of the figure 3 on the face-plate, and so on.

To enable the pawl h^2 to pass the upper stop *h'*, it is arranged in a recess of the weight *i* and acted upon by a spring h^5, which is strong enough to shift the slide-rod *h*, which "gives" sufficiently to permit the passing of the pawl h^2 and weight *i*. The pawl h^2 is provided with a pivoted and spring-actuated point $h^\times$, which gives and permits the pawl h^2 to pass below the upper stop without shifting the slide-rod *h*.

The transmitting mechanism by which motion is transmitted from the car to the indicators is made in a simple and reliable manner and adapted to be applied to the elevators at present in use, while the indicating devices that are operated by the up or down motion of the car are of a simple construction, and have the additional feature of indicating at the same time the direction of motion of the elevator by the setting of the sign-plates.

Having thus described my invention, I claim as new and desire to secure by Letters Patent—

1. The combination, with an elevator-car operated by suitable mechanism, of an endless rope loosely attached to said car and passed over an idler-pulley at the lower part of the elevator-frame, guide-pulleys for the upper end of the endless rope, a gear-wheel transmission and drum operated by said guide-pulleys, a second rope connected to the drum, and a vertically-guided indicator-rod attached to said rope, so as to raise or lower the same by the ascending or descending motion of the car, substantially as set forth.

2. An indicator for elevators, composed of a vertically-guided weight, a pointer attached to said weight and moving along the face-plate of the indicator, a slide-rod guided at one side of the indicator-casing and provided with stops engaged by the movable weight, and an angular sign-plate pivoted to the lower part of the indicator-casing and pivoted eccentrically to the slide-rod, so that said plate may be turned on its axis when the weight arrives at the ends of its motion, substantially as set forth.

3. An indicator for elevators, composed of an exterior casing, a face-plate having figures corresponding to the number of stories, a weight guided by fixed rods of the indicator-frame, said weight being connected to the movable actuating-rope, a slide-rod guided by the indicator-casing and provided with adjustable stops, said stops being adapted to be engaged by the movable weight, an angular sign-plate pivoted to the lower part of the casing and connected eccentrically to the slide-rod, and a locking-spring engaging an enlarged portion or heel on the pivot of the sign-plate, so as to retain the same in position after being turned, substantially as set forth.

In testimony that I claim the foregoing as my invention I have signed my name in presence of two subscribing witnesses.

CHARLES LUDOVICI.

Witnesses:
PAUL GOEPEL,
CHARLES SCHROEDER.