Jan. 13, 1959 R. E. WALKER 2,868,204

COLOSTOMY DEVICE

Filed Jan. 26, 1955

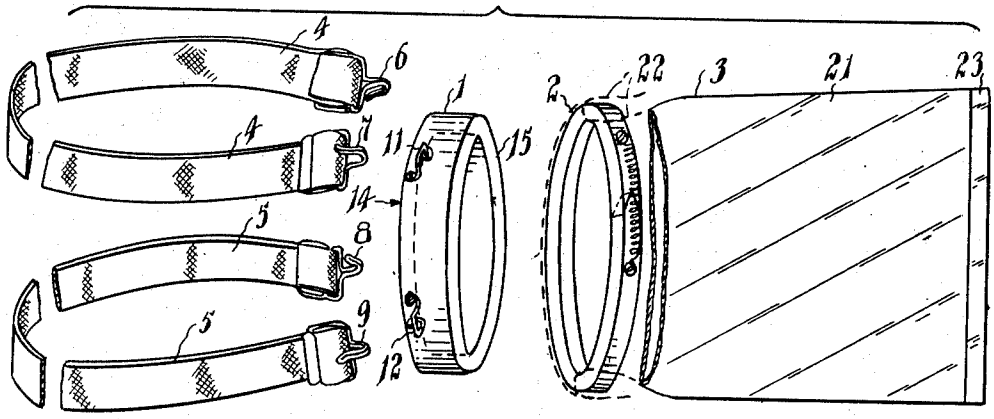

Fig. 1.

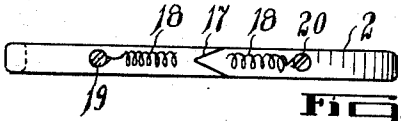

Fig. 4.

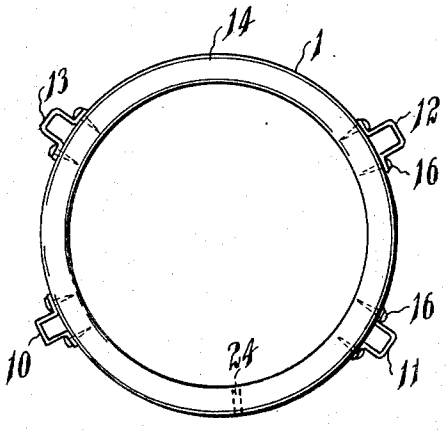

Fig. 2.

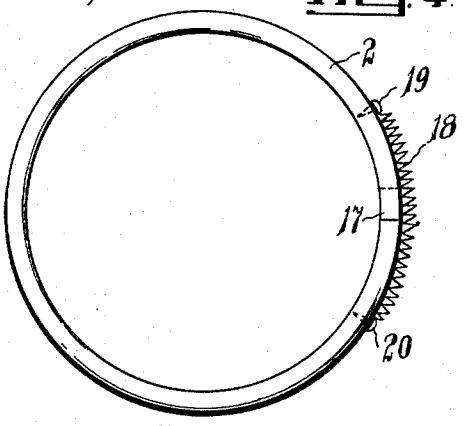

Fig. 3.

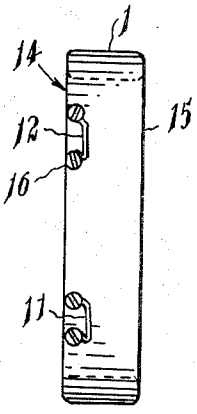

Fig. 7.

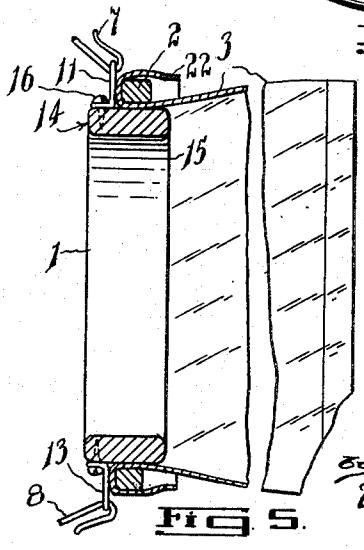

Fig. 5.

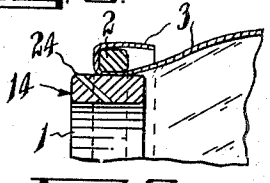

Fig. 6.

INVENTOR

RICHARD E. WALKER

By Frederick C. Bromley

ATTY.

United States Patent Office 2,868,204
Patented Jan. 13, 1959

2,868,204

COLOSTOMY DEVICE

Richard E. Walker, Toronto, Ontario, Canada, assignor to A. B. C. Specialty Company, Toronto, Ontario, Canada, a partnership

Application January 26, 1955, Serial No. 484,108

11 Claims. (Cl. 128—283)

The present invention relates to improvements in a drainage unit for collecting the waste from the body of a person who has undergone a colostomy operation, and pertains in particular to a drainage receptor of this kind which is adapted to be supported on the body of the patient.

It is well-known to provide a device, for use after a colostomy operation or the like, which comprises an offal receptacle and means for securing the mouth of the latter over the incision in such fashion that matter draining therefrom will be collected and stored in the said receptacle which is adapted to be readily detached and either emptied for re-use or replaced by a spare.

It is an object of this invention to provide an arrangement of the kind indicated in which the receptacle is capable of being attached in sealed relation against the body by means which is odor-proof and which does not pull or strain the muscles of the supporting torso in any undue manner.

It is a further object to provide in combination with the sealing and supporting means, an expandable and disposable bag receptacle for retaining the drained matter, the said bag being readily removed for disposal and replacement.

It is a still further object to provide an arrangement of the kind indicated wherein the means for holding the receptacle and retaining it against the subject body in sealed relation therewith comprises a minimum number of parts, is simple to operate, easily cleaned, and which lies flat against the body so that there is a minimum protrusion therefrom of the mechanical elements thereof.

Having now broadly described my invention in general terms a preferred but not limiting example of construction according to my invention will now be described with reference to the accompanying drawings wherein:

Figure 1 depicts an unassembled combination of elements comprising a construction in accordance with the invention.

Figure 2 is an elevation of a first annulus or main support ring according to the invention.

Figure 3 is an elevation of a second annulus or expandable retaining and sealing ring.

Figure 4 is a showing of detail of a typical tensioning means incorporated with a second annulus.

Figure 5 is a diametrical sectional view of the combination according to my invention, showing the manner of assembly of the main elements thereof.

Figure 6 is a fragmentary showing of the assembly depicted in Figure 5 but viewed from an attitude designed to show detail of a gas relief aperture.

Figure 7 is an end elevation of the ring depicted in Figure 2, showing the attitude and relative location of the eye members upon the periphery of the first annulus.

Referring to these figures, 1 is a first annulus or support ring, 2 is the second annulus or expandable retaining ring, 3 is a flexible and preferably expendable offal container. 4 and 5 are strap members designed to adjustably fit appropriate contours of a human torso. The straps are fitted with hooks 6, 7, 8, 9 which co-act with eyes 10, 11, 12, 13 suitably disposed about the periphery of ring 1 so that the latter can be supported with its face 14 in fluid sealed relation with the surface of a human body surrounding an incision therein.

The eyes 10, 11, 12, 13 are mounted so that they extend radially from the outer or major circumference of annulus 1. They are further positioned so that they are near the edge which bounds the face 14 of the annulus 1 (which is intended to co-act with the surface of the human body). The eyes have their flat sides all coplanar, that is, all in a plane normal to the axis of the annulus, and preferably this plane should be located nearer to the plane of face 14 than to that of the outer face 15 of annulus 1.

The eyes may be fixed in various ways but the fastening means should preferably not protrude through the inner circumference of the annulus: it is desirable to prevent any corrodable material such as steel, brass or the like from coming into contact with the fluids with which the inner wall of annulus 1 must always have some contact. The accompanying figures show these eyes in the form of U-shaped members having their ends curled and mounted upon the annulus 1 by drive-screws such as 16 which are set in prepared holes sunk in the wall of the annulus 1 but not piercing the inner circumferential wall thereof. A method of construction suited to large production runs of annulus 1 and its eyes would be to mold the whole assembly from a suitable material with the eyes either a part of the molding or keyed therein during the molding process.

The second annulus 2, is preferably made of a semi-rigid material having a dove-tailed break in the circumference such as that shown at 17. The two free edges of 17 are normally held together so as to define that the nominal minor diameter of annulus 2 is substantially the same as or even very slightly less than the major diameter of annulus 1. When the two rings are sleeved together as shown in Figure 5, the dove-tail 17 is forced slightly open so that a tension exists tending to retain the two rings in tight contact. The dove-tail 17 should be so formed that the two ends can never separate enough to de-form the ring axially by any substantial amount. A tension spring 18 is fastened at points 19 and 20 across the dove-tail to ensure that a uniform and reliable tension always exists. This could be omitted if the material of 2 were of reliable and durable temper, but as the preferred material for the ring 2 is not usually altogether reliable as to temper, the addition of the spring 18 is regarded as highly desirable.

The sac or drainage container 3 is preferably made from a highly flexible material of low cost and, in general but not in a limiting sense, is intended to be used only once and then when desirable thrown away without removing its contents, to be replaced by a fresh one. The container 3 comprises a body portion 21, a mouth 22 dimensioned to sleeve into the annulus 2 and flexible enough to fold outwardly and back over the outer circumference of annulus 2 as shown in section in Figure 5. The other end of the container is closed to form a bottom 23.

In a practical aspect the materials used should be light in weight and capable of fine grained finish so that they can be easily cleaned and sterilized.

The straps 4, 5 can be of conventional form but the hooks 6, 7, 8, 9 should be either a very strong non-metallic plastic or if of metal should possess non-corrosive highly polished surfaces.

In a further practical aspect, the rings may be fabri-

cated from a tempered plastic such as polymethylmethacrylate or the like, and annulus 1 may have its associated eyes fabricated from a metal having polished noncorrosive surfaces. The spring 17 should preferably be chrome plated and polished as should also be the drive screws 16.

Where production quantities permit, the annulus 1 and its eyes, the annulus 2 and the hook devices 6, 7, 8, 9, can all be molded, using material such as that marketed by the proprietors under the trade name "Fiberglas." It will be evident that the annulus 1 and its eyes can be molded as an integral assembly from Fiberglas or a similar very hard and strong dielectric molding material.

The container may be made of polythene or the like and the bottom 23 may be formed by seam welding.

It will be evident that when the components are assembled as shown in Figure 5, the eyes 10, 11, 12, 13 act as abutments for the annulus 2 and its captive container 3. Also the presence of the annulus 2 in abutment with the eyes prevents the hooks 6, 7, 8, 9 from becoming detached from the corresponding eyes 10, 11, 12, 13. This is a highly advantageous feature since, when the torso is flexed during habitual human activity, the straps 4, 5 must often relax enough to momentarily lessen the tension on the hooks 6, 7, 8, 9, 10, and if the abutment of 2 were not present to partly close the eye apertures, the hooks would sometimes slip out of engagement with the eyes. Prior art fixing devices suffer from the fault, which this invention now avoids.

The sac or container 3 is readily detached by exerting firm outward pressure upon the annulus 2 which can with slight effort be pulled, axially only, away from the supporting and fluid sealing annulus 1. The annulus 2 is then easily separated from the container 3 which is normally destroyed together with its contents. The incision and annulus 1 can then be readily washed and sterilized in situ, the annulus 2 washed separately and then fitted to a fresh container 3 and re-assembled.

The annulus 1 also contains an important small aperture 24, which runs diagonally through the annulus as shown in Figures 2 and 6. This aperture 24 should always be positioned at the top of the assembly as shown in Figure 6: its purpose is to prevent the formation of a vacuum or a pressure, as the case may be, during the ebb and flow of drainage from an incision. The position and attitude of this aperture affords breathing of the system without the risk of leakage or escape of odors. This latter feature is an important improvement on prior art arrangements which, to be leak proof, must fit so tightly that the system cannot breathe: this causes great discomfort and sometimes even serious pain to the user, all of which is completely avoided by my arrangement.

It will be evident that various modifications of the invention such as those mentioned and others which will occur to those skilled in the art can be made without departing from the broad spirit of my teachings; all such are to be regarded as lying within the ambit of the appended claims.

What I claim is:

1. A colostomy appliance comprising inner and outer ring members of substantially rigid material, said members being interfitted one about the other, the inner ring member having an inner side face for contact with the body of the wearer and having a peripheral clamping face, the outer ring member being split and having an interior clamp face surrounding said clamping face of said inner ringed member, and a disposable receptacle of thin flexible material having a mouth part inserted smoothly between said clamping faces of the said ring members with the margins of the mouth part reversely folded into encompassing relation around the outer ring member, and said inner and outer ring members being dimensioned so that said clamping faces are operative by tension to releasably secure the mouth of the receptacle therebetween.

2. A colostomy appliance as defined in claim 1, in which the juncture of the ends of the split in the outer ring member provides an interfitting arrangement for said ends to retain them against relative lateral displacement.

3. A colostomy appliances as defined in claim 1, in which the ends of the outer ring member formed by the split are dove-tailed to retain them against relative lateral displacement.

4. A colostomy appliance as defined in claim 1, in which the split in the outer ring member renders it expansible, and in which means are provided to tension the ends of the ring toward each other.

5. A colostomy appliance as defined in claim 1, in which the split in the outer ring member renders it expansible, and in which a spring device is provided to tension the ends of the ring toward each other.

6. A colostomy appliance as defined in claim 1, in which the split in the outer ring member renders it expansible, and in which the ends of the ring are drawn together by a coil spring.

7. A colostomy appliance comprising inner and outer ring members of substantially rigid material, the inner ring member having an inner side face for contact with the body of the wearer and having a peripheral clamping face, the outer ring member having an interior clamp face surrounding said clamping face of said inner ring member, and a disposable receptacle of thin flexible material having a mouth inserted smoothly between said clamping faces of said ring members with the margins of the mouth reversely folded into encompassing relation around the outer ring member, said inner and outer ring members being dimensioned so that said clamping faces are operative by tension to releasably secure the mouth of the receptacle therebetween, and hooks circumferentially carried by the inner ring member for attachment to eye pieces on a body belt, said hooks being located to serve as abutments for the outer ring in the interfitting engagement of the rings.

8. An improved drainage receptor device comprising a first annular member having an inner contact face dimensioned to surround an incision in the body of the wearer and to lie in fluid sealed attitude thereabout against said body, a plurality of eyes attached to the said first annular member and positioned about the periphery thereof to extend outwardly therefrom, a body attachment flexible strap arrangement terminating in hooks engaged with said eyes and thus joining said strap to said first annular member, and a drainage receptacle composed of highly flexible material and having a mouth portion smoothly and detachably engaged on said first annular member, and a second annular member sleeved firmly over said first annular member and said mouth portion of the drainage receptacle thereon to clamp the drainage receptacle in suspended disposition, the structure being characterized in that said eyes are positioned in close proximity to said inner contact face of the first annular member and serve as abutments to limit the extent to which said second annular member may be sleeved on said first annular member so that proper interfitting engagement of the annular members is assured.

9. An improved drainage receptor device comprising a first annular member having an inner contact face dimensioned to surround an incision in the body of the wearer and to lie in fluid sealed attitude thereabout against said body, a plurality of eyes attached to the said first annular member and positioned about the periphery thereof to extend outwardly therefrom, a body attachment flexible strap arrangement terminating in hooks engaged with said eyes and thus joining said strap to said first annular member, and a drainage receptacle composed of highly flexible material and having a mouth portion smoothly and detachably engaged on said first annular

member, and a second annular member sleeved firmly over said first annular member and said mouth portion of the drainage receptacle in suspended disposition, the structure being characterized in that said eyes are positioned in close proximity to said contact face of the first annular member and serve as abutments to limit the extent to which the second annular member may be sleeved on said first annular member so that proper interfitting engagement of the annular members is assured, and wherein said eyes are so dimensioned that when the said hooks are in engagement therewith and the second annular member and the mouth of the receptacle are in common abutment therewith, the eye clearances above the major circumference of the second annular member are so restricted that the hooks cannot be detached from said eyes.

10. An improved drainage receptor device comprising a first annular member having an inner contact face dimensioned to surround an incision in the body of the wearer and to lie in fluid sealed attitude thereabout against said body, a plurality of eyes attached to the said first annular member and positioned about the periphery thereof to extend outwardly therefrom, a flexible strap arrangement terminating in hooks for engagement with mating eyes on said first annular member, to fasten said first annular member firmly against said body, and a drainage receptacle composed of highly flexible material and having a mouth portion smoothly and detachably engaged on said first annular member, and a second annular member characterized in that it is split and in which the end parts formed by the split are dovetailed

to enable it to be firmly sleeved over said first annular member and the mouth of the drainage receptacle to clamp the drainage receptacle in suspended disposition.

11. An improved drainage receptor device comprising a first annular member having an inner contact face dimensioned to surround an incision in the body of the wearer and to lie in fluid sealed attitude thereabout against said body, a plurality of eyes attached to the said first annular member and positioned about the periphery thereof to extend outwardly therefrom, a body attachment flexible strap arrangement terminating in hooks engaged with said eyes and thus joining said strap to said first annular member, and a drainage receptacle composed of highly flexible material and having a mouth portion smoothly and detachably engaged on said first annular member, a second annular member characterized in that it is split and thus provides mating ends which are dovetailed in interfitting relation, and a coil spring having its ends anchored to said second member one on each side of the split and urging the ends of said second member into closed attitude to enable said second member to be firmly sleeved over said first annular member and the mouth of the drainage receptacle to clamp the drainage receptacle in suspended disposition.

References Cited in the file of this patent

UNITED STATES PATENTS

1,656,328	Cras	Jan. 17, 1928
2,585,716	Zaetz	Feb. 12, 1952
2,684,675	Perry	July 27, 1954