SPRUSON & FERGUSON

Australia

Patents Act 1990

NOTICE OF ENTITLEMENT

I, John Gordon Hinde, of Spruson & Ferguson, St Martins Tower, 31 Market Street, Sydney, New South Wales 2000, Australia, being the patent attorney for the Applicant(s)/Nominated Person(s) in respect of Application No 14614/92 state the following:-

The Applicant(s)/Nominated Person(s) has/have entitlement from the actual inventor(s) as follows:-

The Applicant(s)/Nominated Person(s) is/are the assignee(s) of the actual inventor(s).

The Applicant(s)/Nominated Person(s) is/are entitled to rely on the application(s) listed in the Declaration under Article 8 of the PCT as follows:

The Applicant(s)/Nominated Person(s) is/are the assignee(s) of the basic applicant(s).

The basic application(s) listed on the Declaration under Article 8 of the PCT is/are the first application(s) made in a Convention country in respect of the invention.

DATED this 9th day of August 1993

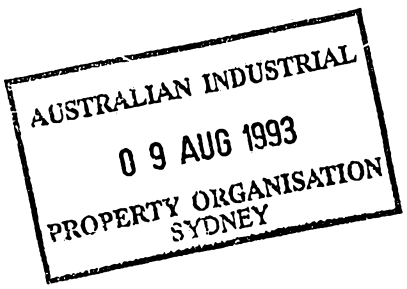

.....

John Gordon Hinde

IRN:
5

INSTR CODE:

665P

AU9214614

(12) PATENT ABRIDGMENT (11) Document No. AU-B-14614/92
(19) AUSTRALIAN PATENT OFFICE (10) Acceptance No. 658871

(54) Title
PAVEMENT MARKERS WITH SILICONE ADHESIVE

(51)[5] International Patent Classification(s)
E01F 009/08 B32B 027/12 E01F 009/04 G09F 003/02
G09F 003/10

(21) Application No. : 14614/92 (22) Application Date : 30.01.92

(87) PCT Publication Number : WO92/15756

(30) Priority Data

(31) Number (32) Date (33) Country
662773 28.02.91 US UNITED STATES OF AMERICA

(43) Publication Date : 06.10.92

(44) Publication Date of Accepted Application : 04.05.95

(71) Applicant(s)
MINNESOTA MINING AND MANUFACTURING COMPANY

(72) Inventor(s)
JAMES M KACZMARCZIK; JAMES E LASCH; GREGORY F JACOBS; DAVID C MAY; DANIEL J WILLIE

(74) Attorney or Agent
SPRUSON & FERGUSON , GPO Box 3898, SYDNEY NSW 2001

(56) Prior Art Documents
EP A0354333
US 4299874
US 2857356

(57) Claim

1. A roadway surface pavement marker characterized in that said marker comprises: a marking member having an upper surface useful as a pavement marking indicium and a lower surface; and a bottom layer of polyorganosiloxane pressure-sensitive adhesive in intimate contact with said lower surface.

OPI DATE 06/10/92 APPLN. ID 14614 / 92
AOJP DATE 12/11/92 PCT NUMBER PCT/US92/00751
INT TION TREATY (PCT)

(51) International Patent Classification 5 : E01F 9/04, 9/08, B32B 27/12

A1

(11) International Publication Number: WO 92/15756

(43) International Publication Date: 17 September 1992 (17.09.92)

(21) International Application Number: PCT/US92/00751

(22) International Filing Date: 30 January 1992 (30.01.92)

(30) Priority data:
662,773 28 February 1991 (28.02.91) US

(71) Applicant: MINNESOTA MINING AND MANUFACTURING COMPANY [US/US]; 3M Center, Post Office Box 33427, Saint Paul, MN 55133-3427 (US).

(72) Inventors: KACZMARCZIK, James, M. ; Post Office Box 33427, Saint Paul, MN 55133-3427 (US). LASCH, James, E. ; Poat Office Box 33427, Saint Paul, MN 55133-3427 (US). JACOBS, Gregory, F. ; MAY, David, C. ; WILLIE, Daniel, J. ; Post Office Box 33427, Saint Paul, MN 55133-3427 (US).

(74) Agents: JORDAN, Robert, H. et al.; Office of Intellectual Property Counsel, Minnesota Mining and Manufacturing Company, Post Office Box 33427, Saint Paul, MN 55133-3427 (US).

(81) Designated States: AT (European patent), AU, BE (European patent), BR, CA, CH (European patent), DE (European patent), DK (European patent), ES (European patent), FR (European patent), GB (European patent), GR (European patent), IT (European patent), JP, KR, LU (European patent), MC (European patent), NL (European patent), SE (European patent).

Published
With international search report.
Before the expiration of the time limit for amending the claims and to be republished in the event of the receipt of amendments.

658871

(54) Title: PAVEMENT MARKERS WITH SILICONE ADHESIVE

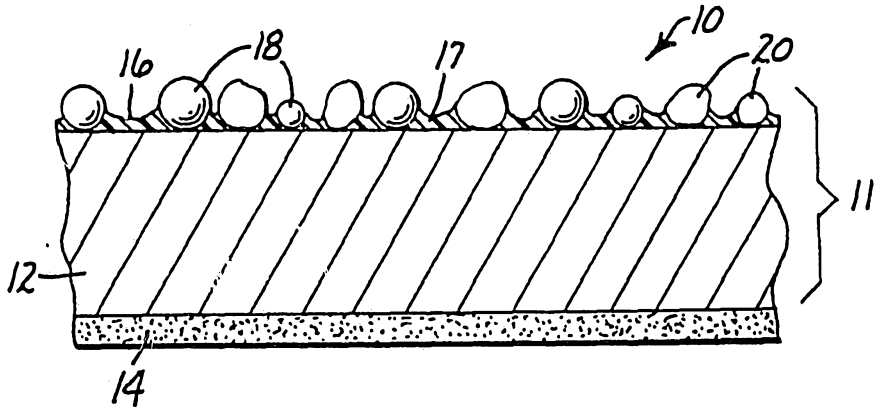

(57) Abstract

A pavement marker includes a marking member (11), such as a sheet (11) or a raised pavement marker body, having an upper surface useful as a pavement marking indicium and a lower surface, and a bottom layer (14) of polyorganosiloxane pressure-sensitive adhesive in intimate contact with the lower surface. A pressure-sensitive adhesive laminate system for attaching a pavement marker to a roadway surface includes a first layer of pressure-sensitive adhesive material, such as a polyorganosiloxane adhesive, a second layer of pressure-sensitive adhesive material, and a layer of deformable material interposed between the first and second pressure-sensitive adhesive layers, wherein the deformable material of the interposed layer is characterized by high cohesive (shear) strength. A method of marking a pavement having a temperature below 15 °C includes providing a pavement marker of the invention and contacting the pavement with the pressure-sensitive adhesive and applying pressure to the top layer to bond the pavement marking material to the pavement.

PAVEMENT MARKERS WITH SILICONE ADHESIVE

Background Of The Invention

The present invention relates to pavement marking materials which may be adhered to a roadway surface to provide traffic control marking. It also relates to adhesive layers useful in adhering pavement marking material to a roadway surface.

Pavement markings convey information to drivers and pedestrians by providing exposed visible and/or reflective surfaces which serve as indicia upon a roadway surface. In the past such a function was typically accomplished by painting portions of a roadway surface. Modern pavement marking materials offer significant advantages over paint such as dramatically increased visibility and/or reflectance, improved durability, and temporary removable marking options. Two examples of modern pavement marking materials are pavement marking sheet materials and raised pavement markers.

Continuous and skip lane stripings on highways and pedestrian crosswalk markings employ preformed pavement marking sheeting preferably comprising a wear-resistant top layer optionally overlying a flexible base sheet. The top layer is generally highly visible, may include reflective elements to enhance detection when illuminated by traffic at night, and serves as indicia when installed upon the roadway surface. Application of pavement marking sheeting to a roadway surface has typically been by contact cement or rubber-based pressure-sensitive adhesives.

Another example of a pavement marking is a raised pavement marker (i.e. a discreet marking structure with a rigid, semi-rigid or flexible marking body) which when applied to a roadway surface provides a raised surface. Often, the raised surface is both reflective and strategically oriented to enhance reflective efficiency when illuminated by traffic at night. In the case of

rigid discreet markers, attachment of the body of each marker to the pavement surface has involved hot-melt adhesives or epoxy systems. Flexible body raised pavement markers have also been attached to pavement surfaces or pavement marking sheeting by soft butyl mastic materials.

In order to fulfill their function as indicia, both raised pavement markers and pavement marking sheeting must be applied to a rather troublesome substrate. That substrate, the roadway surface, varies widely in terms of surface properties because the underlying material may be concrete or asphalt, may be of varying age and temperature, and may, on occasion, be moist or damp or oily. Additionally, the roadway surface may vary in texture from rough to smooth. The substrate surface properties, therefore, represent a considerable challenge for adhesive attachment.

Some of the deficiencies associated with present pavement marking adhesives include: (1) inability to be applied due to limited adhesive tack at low temperature; (2) limited ability to accommodate surface roughness; (3) reduced durability, particularly at low temperature, when subjected to impact or shear; (4) increasing adhesion over time which in turn limits the duration of a period during which a temporary installation may be efficiently removed; and (5) staining of light colored concrete roadway surfaces by adhesives in removable markers. Additionally, particularly in the case of rigid body raised pavement markers, a rigid adhesive attachment to the pavement surface increases the susceptibility of the body of the marker to shattering upon impact by a vehicle tire. Further, inability of the adhesive to bridge gaps between a rigid raised pavement marker and a rough road surface may lead to early detachment of the marker from the roadway surface.

The practical significance of such deficiencies in adhesive systems is a tendency towards either inadequate initial bonding (i.e., through insufficient adhesive

tack) or inadequate permanent bonding of a marking sheet to the roadway surface. Some pavement marking sheets have a somewhat elastic nature and their slow but progressive tendency toward recovery after initial application may exceed adhesive forces bonding the sheet to the pavement and result in the pavement marking sheet becoming detached. Once the pavement marking sheet becomes prematurely detached from a roadway surface, advantages such as more effective visibility and potentially longer service life cannot be realized. Similarly, a shattered or detached raised pavement marker will fail to serve in its intended function as an indicium. Further, inadequate adhesive tack at low temperature limits the application season in many locations which in turn leads to less efficiently marked highway projects.

In view of the above-described deficiencies associated with adhesion of pavement marking sheets or raised pavement markers to roadway surfaces, a desirable adhesive system would embody the following properties:

1. Extended temperature range for application.
2. Durability of application/adhesion.
3. Acceptable cost.
4. Efficient installation.

Additionally, if the system is to be removable from the pavement, an adhesive system would desirably embody the following properties:

1. Peel force does not drastically increase over time.
2. Non-staining to concrete pavement.

Additionally, in the case of rigid body raised pavement markers, an adhesive system would desirably embody the following properties:

1. Accommodates irregularities between the pavement surface and the rigid body of a raised pavement marker.
2. Protects or cushions a raised pavement marker from the shock of impact from a vehicle tire.

The present invention, as disclosed below, satisfies these requirements with silicone pressure-sensitive adhesive systems which are highly useful for pavement marking tapes and raised pavement markers.

Summary Of The Invention

Polyorganosiloxane pressure-sensitive adhesives ("silicone pressure-sensitive adhesives") have been known for many years but are believed not to have been previously employed as adhesives for pavement markers such as pavement marking sheets or raised pavement markers. At least three factors may have discouraged use of silicone pressure-sensitive adhesives in adhesive systems for pavement markers.

First, silicone pressure-sensitive adhesives are relatively more costly than adhesives which have been used for application of pavement markers to pavement.

Second, silicone pressure-sensitive adhesives have a general reputation for only moderate adhesive properties such as tack and peel strength rather than outstanding adhesive tack and peel which would appear to be necessary by the desired property of durability of application/adhesion. Specifically, in comparison to adhesives commonly employed in this field (i.e., rubber resin pressure-sensitive adhesives), silicone pressure-sensitive adhesives generally are characterized by low tack and low peel adhesion at room or cold temperatures. Silicone pressure-sensitive adhesives are better known and have a good reputation as effective adhesives for highly demanding high temperature situations since, when crosslinked, their shear strength remains generally constant at high temperatures.

Third, silicone pressure-sensitive adhesives have a reputation for some adhesion to nearly all surfaces. Thus, any expectation of handling convenience would require the availability of appropriately coated release surfaces. Typically, release surfaces for silicone pressure-sensitive adhesives have been carried upon

separate release sheets. Handling of separate release sheets during application of pavement markers to a roadway surface would be undesirable, particularly in the case of pavement marking sheets.

The present invention, in one embodiment, is a pavement marker. The pavement marker includes an object(also referred to as a marking member), which has an upper surface which is useful as a pavement marking indicium and a lower surface, and also includes a bottom layer of polyorganosiloxane ("silicone") pressure-sensitive adhesive underlying and in intimate contact with the lower surface. The object bearing the layer of silicone pressure-sensitive adhesive might be a pavement marking sheet or a raised pavement marker body.

In a preferred embodiment, the pavement marker is a pavement marking sheet including a base layer and a top layer which is overlying the base layer. Preferably, the overlying top layer includes a visibility enhancing pigment and/or partially embedded and partially exposed elements such as reflective elements and/or skid resisting elements.

Preferably, the pavement marking sheet also includes a layer of adhesive (i.e., bulk adhesive) which underlies the base layer and defines the bottom surface of the sheet. The bulk adhesive layer of the sheet is interposed between the base layer of the sheet and the polyorganosiloxane pressure-sensitive adhesive layer and is in contact with the polyorganosiloxane layer and optionally and most preferably, in contact with the base layer of the sheet.

In order to better adhere to rough textured roadway surfaces, it is advantageous to supply a thicker adhesive film which allows intimate contact with more of the roadway surface. In the absence of an adhesive layer defining the lower surface of the sheet, the bottom layer of silicone pressure-sensitive adhesive has a thickness of from about 3.0 to about 30 mils (76 to 760 micrometers). If an adhesive layer defining the lower

surface of the sheet is present, then the combined thickness of the adhesive layer of the sheet and the bottom layer of silicone pressure-sensitive adhesive is preferably from about 3.0 to about 30 mils (76 to 760 micrometers). In such a combination, the bottom layer of silicone pressure-sensitive adhesive has a thickness of from about 0.5 to about 10 mils (13 to 254 micrometers). The combination of a bottom layer of silicone pressure-sensitive adhesive and the lower adhesive layer of the sheet provides the advantage of several of the desirable properties of silicone pressure-sensitive adhesive while avoiding much of the higher material cost of silicone pressure-sensitive adhesive. Further, employing a thin layer of silicone pressure-sensitive in combination with an adhesive layer of the sheet minimizes some of the less desirable properties of the silicone pressure-sensitive adhesive. In particular, in such an arrangement, the detrimental contribution of the relatively weak shear (cohesive) strength of the uncrosslinked silicone pressure-sensitive adhesive is minimized and instead, the lower layer adhesive of the sheet tends to contribute its relatively stronger shear (cohesive) strength. The combination of a thin silicone pressure-sensitive adhesive underlying and in contact with a conventional rubber-resin adhesive, offers the advantages of material cost and shear (cohesive) strength close to that of the relatively less expensive rubber-resin adhesive, along with the tack, peel, temperature and time independence, and nonstaining characteristics of the silicone pressure sensitive adhesive.

Preferably, the silicone pressure-sensitive adhesive, when coated as a 3 mils (76 micrometers) thick layer on a 2 mils (51 micrometers) thick polyester backing, is characterized by a 90° peel strength of from about 1.0 to about 6.0 pounds ("lbs.") per inch-width (1.8 to 10.5 Newtons ("NT") per centimeter ("cm")) from stainless steel at a peel rate of 21.4 inches (54 cm) per

minute at 21°C and more than about 0.25 lbs. per inch-width (0.4 NT per cm-width) when measured at 2°C.

Preferably, the silicone pressure-sensitive adhesive, when coated as a 3 mils (76 micrometers) thick layer on 2 mils (51 micrometers) thick polyester backing, is characterized by a twin cylinder tack strength (as explained below), during a 21.4 inch per minute (54cm per min) pull rate in a standard tensile strength measuring device, of at least about 0.75 lbs. per inch-width (1.3 NT per cm-width) at 21°C and at least about 0.5 lbs. per inch-width (0.8 NT per cm- width) when measured at 2°C.

A preferred silicone pressure-sensitive adhesive is prepared from a polydimethylsiloxane gum. The preferred silicone pressure-sensitive adhesive is substantially nonstaining to concrete pavement. By "nonstaining to concrete pavement" is meant that subsequent to removal after six months application to concrete pavement, no visually objectionable contrasting mark remains on the concrete pavement.

Additionally, the present invention includes a pressure-sensitive adhesive laminate for attaching a pavement marker to a roadway surface. The pressure-sensitive adhesive laminate system includes a first layer of pressure-sensitive adhesive material, a second layer of pressure-sensitive adhesive material and a layer of deformable material interposed between the first and second pressure-sensitive adhesive layers. The interposed layer of material is characterized by high cohesive strength and high deformability. Preferably, the interposed material is a foamed acrylic adhesive. Preferably, one of the adhesive layers of the pressure-sensitive adhesive laminate includes an acrylic based adhesive. Most preferably, one of the adhesive layers of the pressure-sensitive adhesive laminate includes a polyorganosiloxane adhesive. Most especially preferred is an embodiment in which a polyorganosiloxane layer is used to contact and bond to a roadway surface.

The interposed deformable layer adapts to uneven substrate surfaces to facilitate dependable bonding and may also serve to absorb and/or redistribute a significant portion of the impact or shock of vehicle tires striking the pavement marker. The laminate adhesive is particularly useful for attaching rigid raised pavement markers to a roadway surface. It supports the lower surface of the marker.

The present invention also includes a raised pavement marker including a rigid body having an upper surface useful as a marking indicia and having a base surface; a deformable layer having a first surface supporting the base surface of the rigid body; and a silicone pressure-sensitive adhesive layer laminated to a second surface of the deformable layer.

The present invention also includes a method of preparing pavement markers and a method of marking a pavement with a roadway surface below 15°C.

Brief Description Of The Drawings

FIG. 1 is a schematic sectional view of a portion of a pavement marking sheet of this invention;

FIG. 2 is a schematic sectional view of a portion of another pavement marking sheet of this invention;

FIG. 3 is a schematic side view of a twin cylinder tack testing apparatus; and

FIG. 4 is a schematic sectional view of a portion of an adhesive laminate of this invention.

These figures, which are idealized, are not to scale and are intended to be merely illustrative and non-limiting.

Detailed Description Of Illustrative Embodiments

The present invention, in one embodiment, is a pavement marker. The pavement marker includes a marking member (such as a sheet or backing), which has an upper surface useful as a marking indicium and a lower surface, and a bottom layer of polyorganosiloxane ("silicone")

pressure-sensitive adhesive in intimate contact with the lower surface of the sheet. Pavement markers according to this invention are useful as pavement marking sheets or tapes and are suited to application to roadway surface substrates over a wide range of temperatures, particularly including lower temperatures than those temperatures at which the pressure-sensitive adhesives currently used in the pavement marking industry. Specifically, the present invention facilitates application of pavement marking sheets or tapes to roadway surfaces at temperatures of 2°C. Additionally, pavement markers of this invention bond more effectively to difficult surfaces then do prior art pavement markers.

By "pressure-sensitive adhesive" herein is meant those viscoelastic materials which, in solvent free form, remain aggressively and permanently tacky and will adhere to surfaces tenaciously after the application of only very light manual pressure. By "silicone pressure-sensitive adhesive" or "polyorganosiloxane pressure-sensitive adhesive" herein is meant pressure-sensitive adhesive materials formed from a silicone "gum" structure and a silicone "resin" structure. Typically, the silicone gum and silicone resin are chemically linked by a condensation reaction. Silicone gum structures may include methyl and/or phenyl moieties. The ratio of silicone resin to silicone gum which is used in the silicone pressure sensitive adhesive may vary as long as the product is tacky at room temperature. In the particular case of silicone pressure-sensitive adhesives intended for application to roadway surfaces at or below 15°C, the silicone pressure sensitive adhesive product should be tacky at the intended application temperature. A suitable test method for measuring tack at selected temperatures is described below. Silicone pressure-sensitive adhesive films may also be further crosslinked, for example, through the use of benzoyl peroxide or 2,4-dichlorobenzoyl peroxide or a rare metal catalyst. Crosslinking of films tends to increase the cohesive

strength and resistance to shear but with loss of tack and sometimes loss of peel strength. U.S. Patent No. 2,736,724 (Dexter) and U.S. Patent No. 2,857,356 (Goodwin) represent significant early work in the field in silicone pressure-sensitive adhesives.

In one embodiment, a pavement marker 10, as shown in Figure 1, includes a sheet 11 and a bottom layer 14. The sheet 11, has a base layer 12 and further has an upper surface 16, which is useful as a marking indicium. In the embodiment shown, the upper surface 16 is the surface of an optional top layer 17 overlying base layer 12. The top layer 17 may be formed of a wide range of polymeric materials such as, for example, polymers including polyamides, polyurethanes, epoxies, polyesters, and vinyls and so forth. Preferably, the top layer 17 has a thickness of from about 3 to about 90 mils (76 to 2300 micrometers); more preferably, from about 3 to 14 mils (76 to 358 micrometers); and most preferably, about 5 mils (125 micrometers). Suitable sheets 11, with separate base layers 12 and overlying top layers 17 providing upper surface 16, are disclosed in U.S. Patent No. 4,117,192 (Jorgenson), incorporated herein by reference.

The sheet 11 has upper surface 16 which is useful as a marking indicium and preferably includes reflecting elements 18 and/or skid-resisting particles 20. Preferably, the top layer 12 also includes a visibility enhancing pigment, such as, for example, titanium dioxide. Sheets employing dead soft aluminum are also well known and suitable for use in the present invention.

In a variation of this embodiment, pavement markers which obliterate or temporarily cover existing roadmarkings (such as unwanted paint or marking tape which can not be easily removed) by application over the unwanted marking and thereby providing a flat black or gray surface 16 are also known and considered within the scope of this invention.

The bottom layer 14 includes a silicone or polyorganosiloxane containing pressure-sensitive adhesive. When directly adjoining the base layer 12, the bottom layer 14 has a thickness of from about 3.0 to 30 mils (76 to 760 micrometers), preferably a thickness of from about 4.0 to about 15 mils (100 to 380 micrometers) and most preferably a thickness of from about 5.0 to about 10 mils (127 to 254 micrometers). The bottom layer 14 may optionally include a reinforcement means to increase tensile strength and thereby enhance removability, such as, for example, a scrim or fibrous web as taught in U.S. Patent No. 4,299,874 (Jones et al.), incorporated herein by reference.

In another preferred embodiment, as illustrated in Figure 2, a pavement marker 40 has a sheet 41, with a base layer 42, an optional top layer 45 which provides an upper surface 46, useful as a marking indicium and carrying partially embedded and partially exposed reflective elements 48 and/or skid-resisting particles 50. Sheets employing dead soft aluminum, which is relatively temperature independent in desirable conformance properties, are also well known and suitable for use in the present invention. The sheet 41 also includes a bulk layer of adhesive 58 underlying the base sheet 42. The adhesive layer 58 of the sheet 41 may be any of the adhesive layers typically provided with pavement marking sheets, for example, the butadiene rubber-based rubber-resin pressure-sensitive adhesive disclosed in example 5 of U.S. Patent No. 3,451,537 (Freeman), incorporated herein by reference. An object, specifically a backing or sheet, which may be employed in forming a pavement marker of this invention is the construction disclosed in U.S. Patent No. 4,248,932 (Tung), or U.S. Patent No. 4,388,359 (Ethen), both of which are incorporated herein by reference.

The bottom layer 56 of polyorganosiloxane pressure-sensitive adhesive is in contact with the lower surface of adhesive layer 58. Layer 58 may be described

as defining the lower surface of the sheet 41 and interposed between the base layer 42 and the bottom layer 56. Preferably, the adhesive layer 58 and base layer 42 are in contact with each other, however, other layers may also be present. Further, a reinforcing scrim may be present within the adhesive layer 58 in order to facilitate removability by increasing tensile and tear strength. The combination 54 of the bottom layer 56 of silicone pressure-sensitive adhesive and adhesive layer 58 has a thickness of from about 3 to about 30 mils (76 to 760 micrometers). In the combination 54, the bottom layer 56 of silicone pressure-sensitive adhesive has a thickness of from about 0.5 to about 10 mils (13 to 152 micrometers), preferably from about 2.0 to about 6.0 mils (51 to 152 micrometers) and most preferably from about 2.0 to about 3.0 mils (51 to 76 micrometers).

Silicone pressure-sensitive adhesives are costly relative to other common pressure-sensitive adhesives. Generally, for the purposes of the present invention, it is economically desirable to use as thin a layer of silicone pressure-sensitive adhesive as possible and yet still achieve the overall goals of the invention. This has the additional advantage of minimizing the detrimental effects of the relatively weak shear (cohesive) strength of uncrosslinked silicone pressure sensitive adhesives and generally substituting the relatively stronger shear (cohesive) strength of the less costly traditional bulk adhesive of the sheet.

Suitable silicone pressure-sensitive adhesives are those polyorganosiloxane pressure-sensitive adhesives which exhibit pressure-sensitive adhesive behavior at temperatures from 0 to 50°C, have improved impact properties, and form adhesive bonds at low temperatures when compared to pressure-sensitive adhesives which have conventionally been used in pavement marking tapes.

Preferred polyorganosiloxane pressure-sensitive adhesives enable effective application and adhesion of tapes to roadway surfaces at temperatures significantly

lower than those previously accepted as the norms for roadway marking tape application. However, the low temperature advantage of this invention may only be fully available when used in conjunction with pavement marking sheets (such as Foil based tapes) which also remain flexible and conformable at low temperature.

Suitable silicone pressure-sensitive adhesive, when coated as a 3 mils (76 micrometers) thick layer on a 2 mils (51 micrometers) thick polyester backing, is characterized by a 90° peel strength of from about 1.0 to about 6.0 lbs. per inch width (1.8 to 10.5 NT per cm) from stainless steel at a peel rate of 21.4 inches (54 cm) per minute at 21°C and the peel strength is more than 0.25 lbs. per inch width (0.4 NT per cm width) when tested at 2°C. When performing the above peel tests, the sample is laminated to a stainless steel panel using two passes of a hard rubber (70 shore A durometer) 1.5 inch diameter (3.8 cm) roller and 5 lbs. of pressure. A dwell time (typically 5 minutes) is allowed before peeling. Low temperature testing is done in a 2°C cold room and all equipment and material is at 2°C so that application, dwell and removal occur at low temperature.

Suitable silicone pressure-sensitive adhesive, when coated as a 3 mils (76 micrometers) thick layer on 2 mils (51 micrometers) thick polyester backing web, is characterized by a twin cylinder tack strength (as explained below), during a 21.4 inch per minute (54 cm per min) pull rate in a standard tensile strength measuring device, of at least about 0.75 lbs. per inch width (1.3 NT per cm width) at 21°C and at least about 0.5 lbs. per inch width (0.8 NT per cm width) when measured at 2°C.

Twin Cylinder Tack Test

The twin cylinder tack test provides a simple measure of the tack in an adhesive sample. An apparatus or jig for performing the test is schematically shown in Figure 3 as 60. The test is performed as follows. A

strip of web 62 coated on one side with an adhesive sample 63 is continuously pulled through a nip 64 between a stainless steel roller 66 and a rubber roller 68. The coated side of the web 62 faces the stainless steel roller 66. During the time the web is pulled through the nip, the successive portions of the coating of adhesive 63 first contact the surface of the stainless steel roller 66, then after a brief dwell time are peeled from the surface by the web 62. The test is most conveniently performed with the test jig 60 mounted in a standard tensile testing machine (not shown).

The testing jig 60 consists of two horizontally mounted, parallel, free-rolling cylinders 66 and 68. One of the cylinders 66 has a stainless steel surface; the other cylinder 68 has a rubber surface with a hardness of about 50 when measured by Shore A Durometer. The cylinder diameters for the testing jig are both 1.5 inches (3.8 cm). The length of both cylinders is 3 inches (7.6 cm). The rubber coated cylinder is carried on a hinged support 70 so that it can be brought into contact with the stainless steel cylinder 66 and form a nip 64 with zero loading force. The hinged support 70 also includes a rigid perpendicular projecting lever 72 as a means of loading the rubber cylinder toward the nip with a known static force. The loading weight 74 is hung on the lever 72 with a loading moment such that the gravitational force exerted on the hanging weight 74 is multiplied by a factor of 1.25 when the force at the nip 64 is determined. The two parallel cylinders 66 and 68 are aligned such that in pulling the test sample 63 through the nip 64, the direction of motion of the end of the test sample is tangential to both rolls at their point of contact (i.e., the web is pulled as if it were traveling straight through the nip).

A test sample consisting of a 1 inch (2.54 cm) wide web 62 coated on one side with pressure-sensitive adhesive 63 is placed in the nip 64 of the testing jig with the adhesive side of the sample in contact with the

stainless steel cylinder 66. The rubber cylinder 68 is loaded against the web or backing support 62 of the test sample using a 5 lbs. (2.27 Kg) weight 74. This in turn generates a loading force at the nip 64 of about 6.25 lbs. (2.84 Kg). One end of the test sample is gripped using a standard tensile tester and the test sample is pulled through the nip 64 of the testing jig 60 at a constant rate of, for example, about 18 inches per minute (46 cm per min). The force required to pull the sample 63 through the testing jig 60 is measured. The average force per unit width (i.e, 1.0 inch (2.54 cm)) of sample is the twin cylinder tack value for an adhesive.

During the test, the sample 63 actually remains temporarily in contact with the steel roller for some distance, for example about 0.25 of the circumference of the roll. During this contact or dwell time the angle between the free tape web and the stainless steel roller increases, until the force on the free tape web overcomes the recently formed bond to the stainless surface of cylinder 66 and the web 62 is peeled at a peel angle α (i.e., angle between the web and a tangent to the surface at the point where contact is broken) of, for example, approximately 90°. This corresponds to, for example, a dwell length of about 1.18 inches (2.84 cm), at 18 inches per minute speed, a dwell time of about 3.8 seconds. Overall, the test is representative of the tack property of an adhesive sample 63 since it measures the peel force required shortly after a tacking application of a test sample of adhesive to a surface. The dwell time and peel angle α vary somewhat as a function of speed and tack properties of the silicone pressure sensitive adhesive 63. Extremely tacky silicone pressure sensitive adhesives rapidly form bonds to the stainless steel surface. The test can easily be performed at various selected temperatures to measure the effectiveness of a pressure sensitive adhesive. The angle of arc of contact β with the stainless steel cylinder 66 is a surprisingly sensitive measure of the aggressivity of tack of a

pressure-sensitive adhesive. Particularly desirable silicone pressure-sensitive adhesives tend to have high angles of arc of contact ß. Preferred silicone pressure-sensitive adhesives have angles of arc of contact ß of at least about 40° when pulled at 21.4 inches per minute (54 cm per min) at cold temperatures (i.e. about -1°C). Most particularly preferred are silicone pressure-sensitive adhesives characterized by angles of arc of contact ß of at least about 60° at 30°F (-1°C).

The preferred silicone pressure-sensitive adhesives for temporary, removable pavement markers are substantially nonstaining to concrete pavement. By "nonstaining to concrete pavement" is meant that subsequent to removal after six months application to concrete pavement, no visually objectionable contrasting mark remains on the concrete pavement.

An example of a suitable silicone adhesive is polydimethylsiloxane adhesive, such as for example, the polydimethylsiloxane adhesive ("PDMS") sold as Dow Corning X7-2675 Brand Silicone Adhesive available from Dow Corning Corp. of Midland, Michigan. Other suitable pressure-sensitive adhesives are Dow Corning Q2-7406 and X2-7735 Brand Silicone Pressure-Sensitive Adhesives.

Silicone pressure-sensitive adhesives have several unique advantages when used in removable pavement marking tapes. These advantages include:

1. Significantly less stain on concrete road surface after tape removal.

2. Smooth peel from the roadway service (i.e., non-shocky peel from pavement surface, as opposed to the undesirable peel which has been generally been referred to as "slip-stick" peel)

3. Less build-up of adhesion over time while on the road (lower removal force required).

4. Reduced temperature dependence of tack and peel properties.

These advantages make tapes employing silicone pressure-sensitive adhesives particularly useful for temporary pavement markings.

Generally, pavement marking sheets which are to be used as pavement marking tapes are preferably stored and transported to highway project sites as rolls of tape. During the application and installation process, the tape is unwound from the roll.

In a further embodiment of this invention, handling of the pavement markers of the sheet type may be facilitated by the provision of a suitable low-adhesion backsize coating upon the upper surfaces 16 or 46. A suitable backsize coating is SYL-OFF™ Q2-7785 brand coating available from Dow Corning of Midland, Michigan.

Alternatively, though less desirably, a disposable web bearing a suitable low-adhesion coating may be employed with sheet type markers. A suitable coating allows temporary contact with the silicone pressure-sensitive adhesive layer 14 or 56 without any undue diminishing of subsequent tack or other adhesive properties. Perfluoropolyether compounds; e.g., as disclosed in U.S. Patent No. 4,472,480 (Olson), may be employed to provide such a coating.

The present invention also includes a pressure-sensitive adhesive laminate 100 as shown in Figure 4. The laminate 100 includes a first layer of pressure-sensitive adhesive material 102 and a second layer of pressure-sensitive adhesive material 104 and a layer of deformable, optionally adhesive, material 106 interposed between the first layer 102 and the second layer 104.

The laminate is particularly useful for applying rigid or nearly rigid objects, such as raised pavement markers to roadway surfaces. Raised pavement marker bodies have been previously described in U.S. 4,875,798 and U.S. 4,974,990. Older systems of applying rigid objects to roadway surfaces have employed hot-melt adhesive or epoxy adhesive. Butyl mastics have also been used as pressure-sensitive adhesives for rigid objects on

roadway surfaces. These prior adhesive systems have been awkward to use, time consuming and generally not very durable.

The layer 106 of deformable material is capable of flowing sufficiently so as to increase contact between the layer of pressure sensitive adhesive 104 and the rough roadway surface. This enables a rigid marker (phantom 101) to be more securely bonded to the roadway surface. The deformable, optionally adhesive, layer 106 may also absorb at least some of the impact when a vehicle tire strikes a raised pavement marker employing the laminate 100. Adhesive layer 102 may be F9775PC acrylic adhesive available from the Minnesota Mining and Manufacturing Company of St. Paul, Minnesota. A suitable polyorganosiloxane pressure-sensitive adhesive is Dow Corning adhesive X7-2675 available from Dow Corning Chemical Company of Midland, Michigan. In a most preferred embodiment, the layer of deformable adhesive material 106 is Y4253 foamed acrylic pressure-sensitive adhesive available from the Minnesota Mining and Manufacturing Company of St. Paul, Minnesota. Preferably, the layer of deformable adhesive material has a thickness from about 10 to about 250 mils (254 to 6350 micrometers), more preferably from about 20 to about 50 mils (508 to 1270 micrometers), and most preferably about 35 mils (890 micrometers). In the case of acrylic pressure-sensitive adhesives, such as F9775PC, the pressure-sensitive adhesive layers 102 or 104 should be from about 3 to about 8 mils (76 to 203 micrometers) in thickness and most preferably about 5 mils (127 micrometers) in thickness. In the case of polyorganosiloxane pressure-sensitive adhesive layers 104 or 102, such as X7-2675 silicone adhesive, available from Dow Corning, the layers should be from about 2 to about 8 mils (50 to 203 micrometers) and most preferably about 3 mils (76 micrometers) in thickness. The laminate could also be applied to a roadway and the pavement marker

subsequently applied to the adhesive laminate on the roadway surface.

Although it may be feasible to employ a low adhesion coating upon the various upper surfaces of raised pavement markers, it is believed that handling of such articles will be facilitated by employing a disposable release sheet, since such a release sheet tends to protect the thin layer of silicon pressure-sensitive adhesive from dust and debris, whereas the upper surfaces (optionally rounded) of a first typical raised pavement marker would not fully protect an adhesive surface of a second raised pavement marker stacked atop the first.

Example 1

Q2-7406 brand silicone pressure-sensitive adhesive, available from Dow Corning Corp. of Midland, Michigan, was handspread coated as supplied in xylene solution onto a fluoropolymer release coated polyester liner (SCOTCHPAK™1022 release liner which is available from the Minnesota Mining and Manufacturing Company, "3M") using a notched bar coater. The coating was allowed to air dry for about 10 minutes, dried for about 5 minutes at 70°C and dried further for about 2 minutes at a temperature of 175°C. A sheet of unprimed uncoated polyester liner 2 mils (50 micrometers) in thickness was laminated to the Q2-7406 coating. The thickness of the Q2-7406 dry film was measured at 3.0 mils (76 micrometers).

Example 2

Q2-7406 brand silicone pressure-sensitive adhesive solution, (Dow Corning Corp.), was mixed with a solution of 10 weight percent benzoyl peroxide in xylene so as to produce a solution with a benzoyl peroxide content of 1 weight percent based on Q2-7406 solution (about 2 weight percent based on adhesive solids.) This solution was handspread coated onto a fluoropolymer release coated

polyester liner (SCOTCHPAK™1022 release liner) using a notched bar coater. The coating was allowed to air dry for about 10 minutes, dried for about 5 minutes at 70°C and dried further for about 2 minutes at a temperature of 175°C. A sheet of unprimed uncoated polyester liner 2 mils (50 micrometers) in thickness was laminated to the Q2-7406 coating. The thickness of the Q2-7406 dry film was measured and found to be 2.1 mils (53 micrometers).

Example 3

X2-7735 brand silicone pressure-sensitive adhesive solution (Dow Corning Corp.) was handspread as supplied in xylene solution onto a fluoropolymer release coated polyester liner (SCOTCHPAK™1022 release liner) using a notched bar coater. The coating was allowed to air dry for about 10 minutes, dried for about 5 minutes at 70°C and dried further for about 2 minutes at a temperature of 175°C. A sheet of unprimed uncoated polyester liner 2 mils (50 micrometers) in thickness was laminated to the X2-7735 coating. The thickness of the X2-7735 dry film was measured and found to be 3.0 mils (76 micrometers).

Example 4

X2-7735 brand silicone pressure-sensitive adhesive solution (Dow Corning Corp.) was mixed with a solution of 10 weight percent benzoyl peroxide in xylene so as to produce a solution with a benzoyl peroxide content of 1 weight percent based on X2-7735 solution (about 2 weight percent based on adhesive solids). This solution was handspread coated onto a fluoropolymer release coated polyester liner (SCOTCHPAK™1022 release liner) using a notched bar coater. The coating was allowed to air dry for about 10 minutes, dried for about 5 minutes at 70°C and dried further for about 2 minutes at a temperature of 175°C. A sheet of unprimed uncoated polyester liner 2 mils (50 micrometers) in thickness was laminated to the X2-7735 coating. The thickness of the X2-7735 dry film was measured and found to be 1.9 mils (48 micrometers).

Example 5

X2-7656 silicone pressure-sensitive adhesive solution (Dow Corning Corp.) was mixed with a solution of 10 weight percent platinum catalyst (#7127 Accelerator also available from Dow Corning Corp.) in xylene so as to produce a solution with a platinum catalyst content of 1 weight percent based on X2-7656 solution (about 2 weight percent based on adhesive solids). This solution was handspread coated onto a fluorcpolymer release coated polyester liner (SCOTCHPAK™1022 release liner) using a notched bar coater. The coating was allowed to air dry for about 10 minutes, dried for about 5 minutes at 70°C and dried further for about 2 minutes at a temperature of 175°C. A sheet of unprimed uncoated polyester liner 2 mils in thickness was laminated to the X2-7656 coating. The thickness of the X2-7656 dry film was 3.0 mils (76 micrometers).

Example 6

Rubber resin adhesive used in pavement marking tapes (3M brand STAMARK™ 5730 series pavement marking tapes) was handspread coated as supplied in heptane solution onto a fluoropolymer release coated polyester liner (SCOTCHPAK™1022 release liner) using a notched bar coater. The coating was allowed to air dry for about 10 minutes, dried for about 5 minutes at 70°C and dried further for about 2 minutes at a temperature of 150°C. A sheet of unprimed uncoated polyester liner 2 mils (50 micrometers) in thickness was laminated to the rubber resin adhesive coating. The thickness of the resulting adhesive dry film was 1.9 mils (48 micrometers).

Testing of Examples 1-6

Examples 1-6 were tested for peel and tack properties at both 21°C and -1°C. Peel tests were performed at 15.4 inches per minute (38.4 cm per min) pull rate with both 5 and 60 minute dwell times at a 90° peel angle. The tack tests were performed at a pull rate

of 21.4 inches per minute (54 cm per min) in a twin cylinder tack testing apparatus as described above. The results are presented in Table 1.

Example 7

Q2-7406 brand silicone pressure-sensitive adhesive (available from Dow Corning Corp.) was handspread coated as supplied in xylene solution onto an unprimed uncoated polyester liner 2 mils in thickness using a notched bar coater. The coating was allowed to air dry for about 10 minutes, dried for about 5 minutes at 70°C and dried further for about 2 minutes at a temperature of 150°C. A sheet of fluoropolymer release coated polyester liner (SCOTCHPAK™1022 release liner) was laminated to the Q2-7406 coating. The thickness of the Q2-7406 dry film was 2.4 mils (60 micrometers).

Example 8

Rubber resin adhesive used in pavement marking tapes (3M brand STAMARK™ 5730 series) was handspread coated as supplied in heptane solution onto an unprimed uncoated polyester liner 2 mils in thickness using a notched bar coater. The coating was allowed to air dry for about 10 minutes, dried for about 5 minutes at 70°C and dried further for about 2 minutes at a temperature of 150°C. A sheet of fluoropolymer release coated polyester liner (SCOTCHPAK™1022 release liner) was laminated the rubber resin coating. The thickness of the rubber resin dry film was 2 mils (51 micrometers).

Testing of Examples 7 and 8

Examples 7 and 8 were tested for the range of arc of contact, B, which was observed as the samples were pulled through a twin cylinder tack testing jig at slow (54 cm per min) and fast (540 cm per min) rates at cold (-1°C) and room temperatures (21°C). The results are presented in Table 2 along with the force which was required to pull the samples through the nip. Note that

the range of arc of contact observed for Example 7 is substantial even when pulled at a fast rate at cold temperatures indicating superior performance of a marker of this invention relative to a marker with a rubber-resin pressure sensitive adhesive coating. The force required to pull the samples also indicates the superiority of the silicone pressure sensitive adhesive coated sample of Example 7 to the rubber-resin pressure sensitive adhesive coating of Example 8.

Examples 7 and 8 were also tested using a rolling ball test adapted from ASTM D 3121 (TACK OF PRESSURE-SENSITIVE ADHESIVES BY ROLLING BALL) by substituting a glass ball weighing 2.2832 grams and having a diameter of 0.4772 inches (1.212 cm). The testing was performed at -1°C and at 21°C. At 21°C, the rolling ball stopped at an average distance of 1.3 cm for Example 7 and 25.5 cm for Example 8. At -1°C, the rolling ball stopped at an average distance 2.5 cm for Example 7 but did not stop within 70 cm for Example 8. The relatively short stop distance of Example 7, at both room and cold temperatures indicates the superiority of markers according to the present invention.

Example 9

A silicone pressure sensitive adhesive, X7-2675 (available from Dow Corning Corp.) as supplied in about 50 percent solids solution in Freon™ solvent was spread using a hand operated notched bar coater to form an adhesive coating onto a fluoropolymer release coated polyester liner, (SCOTCHPAK™1022 Release Liner). The coating was allowed to air dry at ambient conditions for about 10 minutes followed by about 10 minutes at 70°C. The coating had a dry film thickness of about 2 mils (51 micrometers).

The resulting silicone pressure sensitive adhesive film coating, with the release liner still in place, was laminated to the pressure sensitive adhesive coated surface, the bottom side of 3M brand STAMARK™ 5730

pavement marking tape. The release liner was stripped from the silicone pressure sensitive adhesive and the composite laminate pavement marking tape was applied to a traffic bearing pavement surface and tamped into place by conventional means.

Example 10

A Silicone pressure sensitive adhesive, Q2-7406, (available from Dow Corning Corp.) was coated as supplied onto a fluoropolymer release coated polyester liner (SCOTCHPAK™1022 Release Liner) using a notched bar coated by means of hand spread coating techniques. The coating was allowed to air dry at ambient conditions for about 10 minutes followed by about 10 minutes at 70°C and a further 2 minutes at about 175°C. The coating had a dry film thickness of about 2 mils (51 micrometers).

This silicone pressure sensitive adhesive film with release liner still in place was laminated to the pressure sensitive adhesive coated surface, the bottom side of a commercially available pavement marking tape with a rubber-resin pressure sensitive adhesive (3M Brand SCOTCHLANE™ 5710 pavement marking tape, available from 3M). The release liner was stripped from the silicone pressure sensitive adhesive and the composite laminate pavement marking tape was applied to a traffic bearing pavement surface and tamped into place by conventional means.

Example 11

A Silicone pressure sensitive adhesive, Q2-7406, (available from Dow Corning Corp.) was coated as supplied onto a fluoropolymer release coated polyester liner (SCOTCHPAK™1022 Release Liner) using a notched bar coater by means of hand spread coating techniques. The coating was allowed to air dry at ambient conditions for about 15 minutes followed by forced air drying for about 3 minutes at about 150°C. The coating had a dry film thickness of about 2.5 mils (63 micrometers). Two layers

were laminated to produce a layer about 5 mils (125 micrometers) thick.

The resulting silicone pressure sensitive adhesive film with release liner still in place was laminated to the bottom side of a commercially available pavement marking tape which lacked a pressure-sensitive adhesive (3M Brand STAMARK™ 5760 pavement marking tape). The release liner was stripped from the silicone pressure sensitive adhesive and the composite laminate pavement marking tape was applied to a traffic bearing pavement surface and tamped into place by conventional means.

Example 12

A silicone pressure sensitive adhesive, Q2-7406, (available from Dow Corning Corp.) was coated as supplied onto a fluoropolymer release coated polyester liner (Scotchpak 1022 Release Liner) using a notched bar coater by means of hand spread coating techniques. The coating was allowed to air dry at ambient conditions for about 15 minutes followed by forced air drying for about 3 minutes at about 150°C. The coating had a dry film thickness of about 2 mils (51 micrometers).

Example 13

The silicone pressure sensitive adhesive film of Example 12 with release liner still in place was laminated to the pressure sensitive adhesive coated surface (the bottom side of 3M Brand STAMARK™ 320 series pavement marking tape). The release liner was stripped from the silicone pressure sensitive adhesive and the composite laminate pavement marking tape was applied to a concrete pavement surface and tamped into place by conventional means.

Example 14

The silicone pressure sensitive adhesive film of Example 12 with release liner still in place was laminated to the pressure sensitive adhesive coated

surface (the bottom side of Flex-O-Line Brand Pavement Striping Tape, Wet Reflective, Construction, Economy, pavement marking tape, available from Lukens General Industries, Inc., Flex-O-Lite Division, of St. Louis, Missouri). The release liner was stripped from the silicone pressure sensitive adhesive and the composite laminate pavement marking tape was applied to a concrete pavement surface and tamped into place by conventional means.

Example 15

The silicone pressure sensitive adhesive film of Example 12 with release liner still in place was laminated to 3 mil thick dead soft aluminum foil available from ALCOA of Pittsburgh, Pennsylvania. The release liner was stripped from the silicone pressure sensitive adhesive and the composite laminate was applied to a concrete pavement surface and tamped into place by conventional means used for pavement marking tapes.

Example 16

A 3 mil thick layer of rubber resin adhesive (used in 3M brand SCOTCHLANE™ 5710 series pavement marking tapes) on a release liner was laminated to a 3 mil (76 micrometer) thick sheet of dead soft aluminum foil available from ALCOA of Pittsburgh, Pennsylvania. The release liner was stripped from the rubber resin adhesive and the composite laminate was applied to a concrete pavement surface and tamped into place by conventional means used for pavement marking tapes.

Example 17

A 3 mil thick layer of rubber resin adhesive (used in 3M brand SCOTCHLANE™ 5710 series pavement marking tapes) on a release liner was laminated to the pressure sensitive adhesive coated surface (i.e., the bottom side) of a commercially available pavement marking tape (3M brand STAMARK™ 320 series pavement marking tape). The

release liner was stripped from the silicone pressure sensitive adhesive and the composite laminate pavement marking tape was applied to a concrete pavement surface and tamped into place by conventional means.

Example 18

A 3 mil thick layer of rubber resin adhesive (used in 3M brand SCOTCHLANE™ 5710 series pavement marking tapes) on a release liner was laminated to the pressure sensitive adhesive coated surface (i.e., the bottom side) of a commercially available pavement marking tape (Flex-O-Line Brand Pavement Striping Tape, Wet Reflective, Construction, Economy, pavement marking tape). The release liner was stripped from the silicone pressure sensitive adhesive and the composite laminate pavement marking tape was applied to a concrete pavement surface and tamped into place by conventional means.

Testing of Examples of 13-18

Samples, sized 24 inches by 4 inches (61 cm by 10 cm) of marking sheets from Examples 13 through 18 and two commercially available pavement marking tapes which included dead soft aluminum foil conformance layers (STAMARK™320 and Flex-O-Lite Economy brand pavement marking tape) were applied to a concrete pavement surface having a temperature of about 45°F (7°C). The samples were tamped against the surface using a 3M Roller Tamper Cart (model RTC-2 available from 3M) loaded with 200 lbs (90 Kg). The samples were peeled, at 90° from the surface and rate of 152 inches per minute (3.86 cm per min) 16 hours after installation. The temperature during peeling was 37°F (3°C). The results are reported in Table 3. Note that the pavement markers of the present invention as represented by Examples 13 through 15 required consistent and desirably moderate force at 90° to peel from the pavement. At lower temperatures, Examples 16-18 would have decreased ability to form bonds

and therefore lower peel values. Examples 13-15 would be less affected.

Example 19

A raised pavement marker having a marker body with a generally planar bottom surface (such as, for example, the marker disclosed in U.S. Patent No. 3,332,327 (Heenan), incorporated herein by reference) could be adapted for roadway application by lamination to a pressure-sensitive adhesive laminate prepared as follows:

Step 1. An acrylic pressure-sensitive adhesive transfer tape of about 5 mils (127 micrometers) in thickness (available from 3M Company, Industrial Specialties Division, part #F9775PC) could be laminated to one side of a suitable deformable layer such as described in U.S. Patent No. 4,415,615 (Esmay), and which is available from 3M, Sumitomo 3M Division, as part number JT1400-7370-4. Lamination should be done at relatively light pressure, preferably about 8 to 10 lbs./in^2 (5.5 to 6.9 NT/cm^2).

Step 2. A polyorganosiloxane pressure-sensitive adhesive film could be prepared by coating Dow Corning polyorganosiloxane adhesive X7-2675 (available from Dow Corning Corp.) onto a suitable fluoropolymer release coated film (such as 3M SCOTCHPAK 1022 Release liner). This adhesive solution should be coated to a thickness of about 6 mils (152 micrometers). It is then subjected to room temperature (65 to 72°F (18 to 22°C)) for 10 minutes followed by five minutes at 200°F (93°C). The final coating thickness should be about 3 mils (76 micrometers).

Step 3. To the other side of the conformance layer, the polyorganosiloxane adhesive (from Step 2) should be laminated using light pressure (8 to 10 lbs./in^2 (5.5 to 6.9 NT/cm^2)).

Step 4. For application to the bottom of the raised pavement marker the protective film could be removed from the acrylic pressure-sensitive adhesive and

applied with pressure to the bottom of the marker, preferably with pressure greater than 10 lbs./in^2 (6.9 NT/cm^2).

For application to the road, the fluoropolymer release film could be removed from the polyorganosiloxane pressure-sensitive adhesive. The marker could be positioned with the polyorganosiloxane adhesive against the road surface. Pressure could be applied to the top of the raised pavement marker to facilitate adhesion to the road surface. Sufficient pressure could be exerted by simply standing on the marker for about 15 seconds.

Example 20

A raised pavement marker without a generally planar bottom surface, the body of which has been previously described in U.S. Patent No. 4,875,798 (May) could also be prepared. In preparing such a raised pavement marker, it is preferable to use a conformance material having greater resistance to penetration than described in the aforementioned U.S. Patent No. 4,415,615. A suitable conformance layer for such markers would be Acrylic Foam Tape 5390 (available from 3M). The acrylic foam tape has been previously described in U.S. Patent No. 4,223,067 (Levens) and could be substituted into the method of Example 19.

In another embodiment, a pavement marker including an object (such as a pavement marking sheet or a raised pavement marker) may also be supported at the lower surface of the object by a deformable layer and a pressure-sensitive adhesive layer underlying the deformable layer. The deformable layer promotes contact between the underlying pressure sensitive adhesive layer and the roadway surface during and after installation. In the case of a rigid marker, it fills the space between the road surface and the marker. In the case of a flexible object such as a sheet, it compensates for deficiencies in deformability of the sheet.

Although the present invention has been described with reference to the preferred embodiments, workers skilled in the art will recognize the changes may be made in form and detail without departing from the spirit and scope of the invention.

TABLE 1

SAMPLE	PEEL -1°C with dwell 5/60 min	PEEL 21°C with dwell 5/60 min	TACK -1°C	TACK 21°C
Example 1	0.16/0.53	1.37/2.94	0.88	2.71
Example 2	0.04/0.18	0.23/0.44	0.61	0.84
Example 3	0.18/0.23	2.15/4.11	0.79	2.80
Example 4	0.05/0.23	0.16/0.40	0.44	0.44
Example 5	2.63/2.24	3.20/3.50	2.28	3.85
Example 6	0.75/1.84	1.05/1.40	0.61	1.05

Units = NT/cm-width

TABLE 2

SAMPLE	PULL RATE	β @-1°C	β @21°C	TACK @-1°C	TACK @21°C
Example 7	54cm/min	45-90°	85-90°	1.6	2.3
	540cm/min	35-55°	80-85°	0.7	2.6
Example 8	54cm/min	25-35°	80-85°	0.5	1.4
	540cm/min	10-20°	45-50°	0.4	1.1

Note: TACK reported in NT/cm-width

TABLE 3

Sample	Peel Force NT/cm-width
Example 13	0.52
Example 14	0.44
Example 15	0.61
Example 16	1.34
Example 17	1.03
Example 18	0.76

Comparison Examples:
(Commercially Available
Foil Pavement Tapes)

STAMARK™ 320 (3M)	0.33
Flex-O-Line (Lukens)	0.07

CLAIMS:

1. A roadway surface pavement marker characterized in that said marker comprises: a marking member having an upper surface useful as a pavement marking indicium and a lower surface; and a bottom layer of polyorganosiloxane pressure-sensitive adhesive in intimate contact with said lower surface.

2. The pavement marker of claim 1 further characterized in at least one of the following:

a) said marking member is a sheet; or

b) said marking member is a raised body.

3. The pavement marker of claim 1 further characterized in that said polyorganosiloxane pressure-sensitive adhesive layer has a thickness of from about 13 micrometers to about 760 micrometers.

4. The pavement marker of claim 1 further characterized in that said polyorganosiloxane pressure-sensitive adhesive layer, when coated as a 76 micrometer layer on a 51 micrometer polyester backing, is characterized by at least one of the following:

a) a 90° peel strength of from 1.8 to 10.5 NT per cm width from stainless steel at a peel rate of 54 cm per minute at 21°C and more than 0.4 NT per cm width at 2°C; or

b) at least about a 40° arc of contact ß with a steel cylinder in a twin cylinder tack test at a pull rate of 54 cm per min at -1°C.

5. The pavement marker of claim 1 further characterized in that said polyorganosiloxane pressure-sensitive adhesive, when coated as a 76 micrometer layer on 51 micrometer polyester backing, is characterized by a twin cylinder tack strength, during a 54 cm per minute pull in a standard tensile strength measuring device, of

AUSTRALIAN PATENT OFFICE

at least 1.3 NT per cm width at 21°C and at least 0.8 NT per cm at 2°C.

6. The pavement marker of claim 1 further characterized in that said pavement marker is a removable marker and the polyorganosiloxane pressure-sensitive adhesive is substantially nonstaining upon removal following a six month application to concrete pavement.

7. The pavement marker of claim 1 further characterized in that said marker comprises reflective elements partially embedded in and partially protruding from said upper surface.

8. The pavement marker of claim 1 further characterized in that said polyorganosiloxane pressure-sensitive adhesive includes polydimethylsiloxane or polydiphenylsiloxane.

9. The pavement marker of claim 1 further characterized in that said marking member is a sheet comprising a layer of adhesive underlying the base layer and wherein the adhesive layer of the sheet is interposed between the base layer of the sheet and the polyorganosiloxane pressure-sensitive adhesive layer.

10. The pavement marker of claim 9 further characterized in that the interposed layer of adhesive of the sheet comprises:

a rubber-based pressure-sensitive adhesive.

11. A pressure-sensitive adhesive laminate for attaching a pavement marker to a roadway surface comprising:

a) a first layer of polyorganosiloxane pressure-sensitive adhesive material;

b) a second layer of pressure-sensitive adhesive material; and

c) a layer of material interposed between the first and second pressure-sensitive adhesive layers, wherein the material of the interposed layer is deformable and characterized by high cohesive (shear) strength.

12. The pressure-sensitive adhesive laminate of claim 11 further characterized in at least one of the following:

a) said second layer of pressure-sensitive adhesive material is an acrylic based adhesive; or

b) said layer of interposed material is an acrylic based foam.

13. A raised pavement marker characterized in that it comprises:

a) a marker body having an upper surface useful as a marking indicium and having a lower surface;

b) a deformable layer supporting the lower surface of the marker body; and

c) a pressure-sensitive polyorganosiloxane layer underlying the deformable layer.

14. A method of marking a pavement having a roadway surface with a temperature below 15°C, characterized in that said method comprises the steps of:

a) providing a pavement marker comprising:
a marking member having an upper surface useful as a marking indicium and a lower surface;

b) applying a layer of polyorganosiloxane pressure-sensitive adhesive to the roadway surface; and

c) laminating the layer of polyorganosiloxane on the roadway surface to the lower surface of the payment marker.

15. A roadway surface pavement marker, substantially as described herein with reference to Fig. 1 or Fig. 2 of the accompanying drawings and/or any one of the Examples other than comparative examples.

16. A pressure-sensitive adhesive laminate for attaching a pavement marker to a roadway surface, substantially as described herein with reference to any one of the Examples other than comparative examples.

DATED this Sixteenth Day of February 1995

Minnesota Mining and Manufacturing Company

Patent Attorneys for the Applicant

SPRUSON & FERGUSON

AUSTRALIA PATENT OFFICE

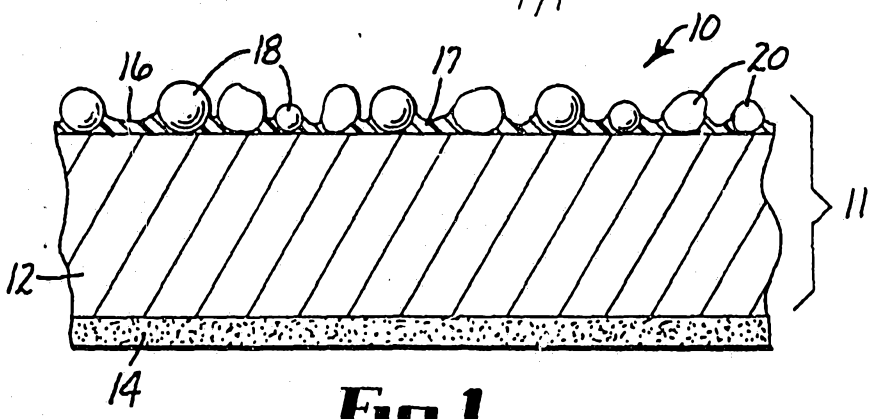

Fig. 1

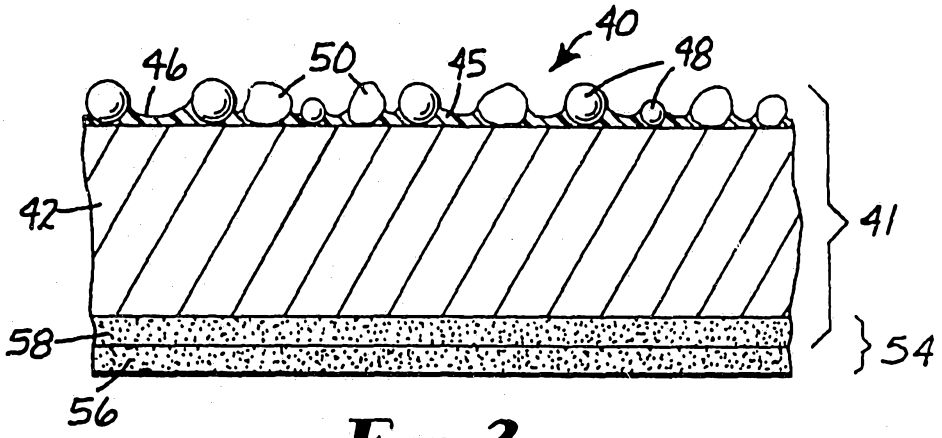

Fig. 2

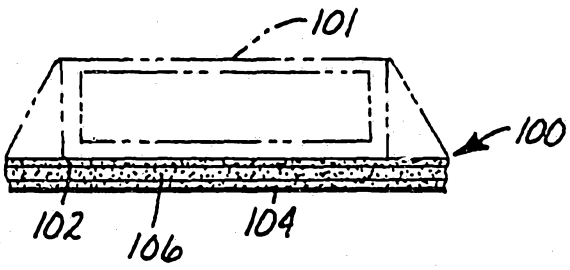

Fig. 4

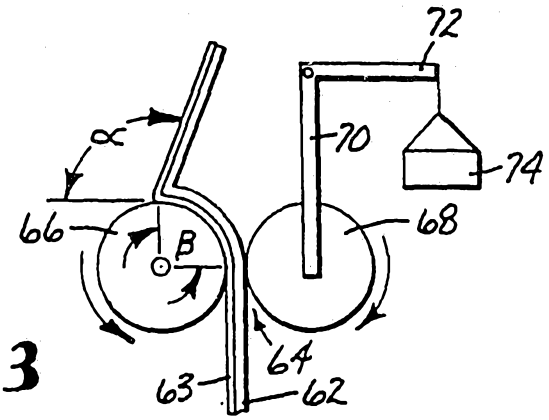

Fig. 3

INTERNATIONAL SEARCH REPORT

International Application No PCT/US 92/00751

I. CLASSIFICATION OF SUBJECT MATTER (if several classification symbols apply, indicate all)[6]

According to International Patent Classification (IPC) or to both National Classification and IPC

Int.Cl. 5 E01F9/04; E01F9/08; B32B27/12

II. FIELDS SEARCHED

Minimum Documentation Searched[7]

Classification System	Classification Symbols
Int.Cl. 5	E01F ; B32B

Documentation Searched other than Minimum Documentation to the Extent that such Documents are Included in the Fields Searched[8]

III. DOCUMENTS CONSIDERED TO BE RELEVANT[9]

Category °	Citation of Document,[11] with indication, where appropriate, of the relevant passages[12]	Relevant to Claim No.[13]
X Y	EP,A,0 354 333 (H. SILBERNAGEL) 14 February 1990 see the whole document	1,2,6, 11,13 3,7,10, 14
Y A	US,A,2 857 356 (J.T. GOODWIN) 21 October 1958 cited in the application see column 1, line 48 - line 61 see column 7, line 29 - line 47	3,10 1
Y A	US,A,4 299 874 (D.C. JONES) 10 November 1981 cited in the application see column 2, line 67 - column 3, line 13	7 1,11
Y A	US,A,4 117 192 (J.L. JORGENSEN) 26 September 1978 cited in the application see column 2, line 42 - line 56; figure	14 1

-/--

° Special categories of cited documents :[10]

"A" document defining the general state of the art which is not considered to be of particular relevance

"E" earlier document but published on or after the international filing date

"L" document which may throw doubts on priority claim(s) or which is cited to establish the publication date of another citation or other special reason (as specified)

"O" document referring to an oral disclosure, use, exhibition or other means

"P" document published prior to the international filing date but later than the priority date claimed

"T" later document published after the international filing date or priority date and not in conflict with the application but cited to understand the principle or theory underlying the invention

"X" document of particular relevance; the claimed invention cannot be considered novel or cannot be considered to involve an inventive step

"Y" document of particular relevance; the claimed invention cannot be considered to involve an inventive step when the document is combined with one or more other such documents, such combination being obvious to a person skilled in the art.

"&" document member of the same patent family

IV. CERTIFICATION

Date of the Actual Completion of the International Search	Date of Mailing of this International Search Report
08 JULY 1992	03. 08. 92
International Searching Authority	**Signature of Authorized Officer**
EUROPEAN PATENT OFFICE	VERVEER D.

III. DOCUMENTS CONSIDERED TO BE RELEVANT (CONTINUED FROM THE SECOND SHEET)

Category °	Citation of Document, with indication, where appropriate, of the relevant passages	Relevant to Claim No.
A	US,A,4 223 067 (D. L. LEVENS) 16 September 1980 cited in the application see column 4, line 1 - line 20	1,2,7,9, 11
A	US,A,4 472 480 (P.E. OLSON) 18 September 1984 cited in the application see column 3, line 29 - line 40 see column 9, line 32 - line 40	5
A	US,A,4 415 615 (D.L. ESMAY) 15 November 1983 cited in the application see column 4, line 52 - line 62	1,11,12
A	US,A,4 974 990 (C.V. ANDERSON) 4 December 1990 cited in the application see column 3, line 64 - column 4, line 7	14

ANNEX TO THE INTERNATIONAL SEARCH REPORT ON INTERNATIONAL PATENT APPLICATION NO. US 9200751 SA 58096

This annex lists the patent family members relating to the patent documents cited in the above-mentioned international search report. The members are as contained in the European Patent Office EDP file on
The European Patent Office is in no way liable for these particulars which are merely given for the purpose of information. 08/07/92

Patent document cited in search report	Publication date	Patent family member(s)	Publication date
EP-A-0354333	14-02-90	DE-U- 8809631	29-09-88
US-A-2857356		None	
US-A-4299874	10-11-81	AU-B- 537122	07-06-84
		AU-A- 389181	08-10-81
		CA-A- 1142010	01-03-83
		EP-A,B 0037211	07-10-81
		JP-C- 1293877	16-12-85
		JP-A- 56153003	26-11-81
		JP-B- 60017884	07-05-85
US-A-4117192	26-09-78	None	
US-A-4223067	16-09-80	None	
US-A-4472480	18-09-84	AU-B- 566048	08-10-87
		AU-A- 1647683	05-01-84
		CA-A- 1209410	12-08-86
		EP-A,B 0098699	18-01-84
		JP-B- 3040753	19-06-91
		JP-A- 59022982	06-02-84
US-A-4415615	15-11-83	AU-B- 553606	24-07-86
		AU-A- 1035083	21-07-83
		CA-A- 1168933	12-06-84
		EP-A,B 0084220	27-07-83
		JP-B- 3040752	19-06-91
		JP-A- 58125776	26-07-83
US-A-4974990	04-12-90	AU-A- 6379490	02-05-91
		EP-A- 0425239	02-05-91

EPO FORM P079