June 1, 1965 G. A. KUPSKY 3,187,320

SEGMENT DISPLAY DEVICE

Filed June 13, 1962 2 Sheets-Sheet 1

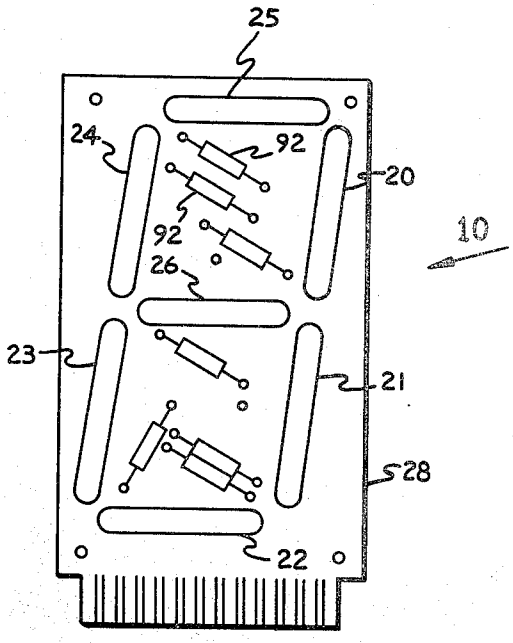

Fig. 1

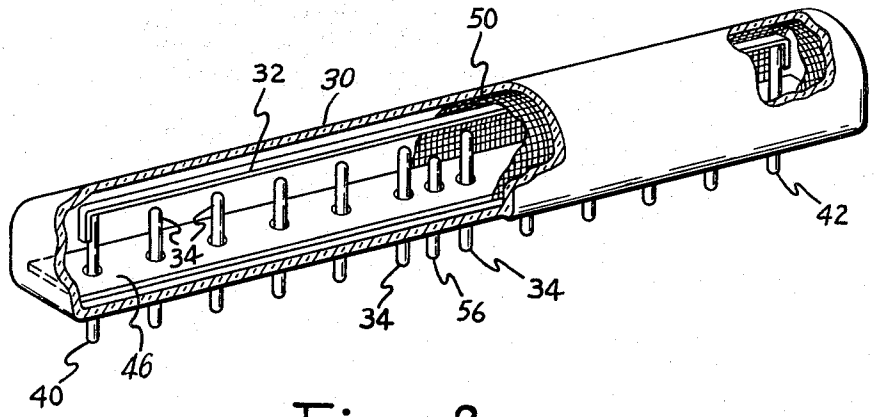

Fig. 2

INVENTOR.
GEORGE A. KUPSKY
BY
Robert A. Green
ATTORNEY

June 1, 1965 G. A. KUPSKY 3,187,320

SEGMENT DISPLAY DEVICE

Filed June 13, 1962 2 Sheets-Sheet 2

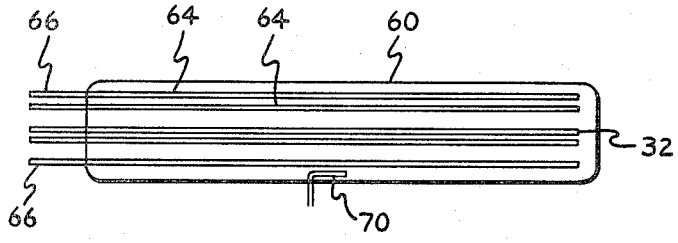

Fig. 3

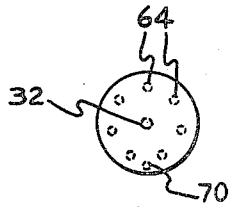

Fig. 4

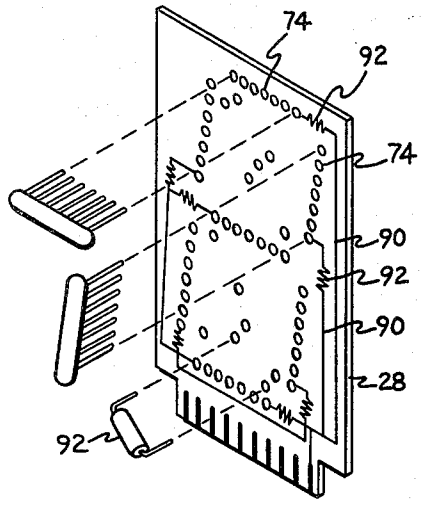

Fig. 5

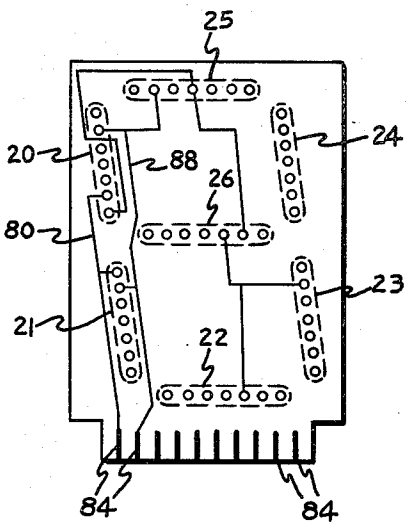

Fig. 6

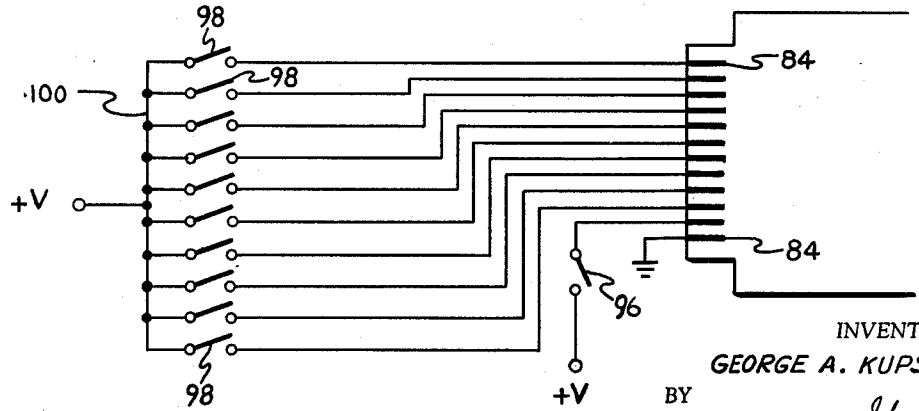

Fig. 7

INVENTOR.
GEORGE A. KUPSKY
BY
Robert A. Green
ATTORNEY

United States Patent Office

3,187,320

Patented June 1, 1965

3,187,320

SEGMENT DISPLAY DEVICE

George A. Kupsky, Plainfield, N.J., assignor to Burroughs Corporation, Detroit, Mich., a corporation of Michigan

Filed June 13, 1962, Ser. No. 202,286
8 Claims. (Cl. 340—336)

This invention relates to indicator and display devices.

At the present time, electronic devices used for display purposes comprise, for the most part, cold cathode gaseous glow indicator devices. In these devices, cathode electrodes are used to represent characters, messages, or the like, and these cathodes glow when a suitable potential is applied thereto. Other types of display devices use incandescent bulbs and lens systems in combination with message elements to provide display. While these devices provide operable and suitable displays under most circumstances, there is a limitation as to the size of the message or character which can be displayed with ease. Thus, it would be relatively difficult and expensive, and, in some cases, impossible to provide large-size displays, for example, four or five inches in height, with devices of the prior art.

Accordingly, the objects of the invention are directed toward the provision of a new and improved display device which is relatively simple, inexpensive, and readily adapted for use to provide a wide range of display sizes.

Briefly, a display device embodying the invention includes a plurality of individual gas tubes, each including a glow cathode and a plurality of actuating elements. Each tube is used as one element of a matrix in which the elements may be selectively energized to provide the desired display. The matrix of glow elements is mounted on a suitable support which carries coding means for allowing relatively simple selection of the elements to provide a desired visual representation.

The invention is described in greater detail by reference to the drawing wherein:

FIG. 1 is an elevational view of a device embodying the invention;

FIG. 2 is a perspective view, partly in section, of one of the glow elements of FIG. 1;

FIG. 3 is an elevational view of a modification of the glow element of FIG. 2;

FIG. 4 is a sectional view along line 4—4 in FIG. 3;

FIG. 5 is a perspective exploded view of a portion of the device of FIG. 1;

FIG. 6 is an elevational view of the rear surface of the device of FIG. 1; and

FIG. 7 is a schematic representation of a circuit for operating the device of the invention.

Referring to the drawing and particularly to FIG. 1, a display device 10 embodying the invention includes a matrix of seven light-producing gas tubes 20, 21, 22, 23, 24, 25, 26 arrayed in a figure-eight pattern as shown for displaying numerals "0" to "9". The tubes are mounted on an insulating disk 28 of glass, plastic, or the like. In a matrix-type tube such as tube 10, the individual tubes 20 to 26 are used in different combinations to provide the various desired numeral representations. Thus, for example, the tubes 20 and 21 or 23 and 24 are used to represent numeral one; tubes 25, 20, 26, 23, and 22 are used to represent numeral two; tubes 25, 20, 26, 21, and 22 are used to represent numeral three, and so forth.

In the embodiment of the invention shown in FIGS. 1 and 2, each of the gas tubes 20 to 26 comprises an elongated tubular glass envelope 30 filled with argon, neon, or the like for supporting cathode glow, and includes a cathode electrode 32 and a plurality of anode electrodes 34, with one anode electrode being provided

for each combination in which the particular tube is used, as described above. The cathode electrode 32 comprises an elongated rod or wire extending along the axis of the envelope and secured at its ends to a pair of contact pins 40 and 42 sealed in the envelope, preferably at opposite ends thereof.

The anode electrodes 34 comprise pins or rods which lie in the same plane parallel to each other and perpendicular to the central cathode, with their inner ends all spaced the same distance from the cathode. Uniform anode-to-cathode spacing is required for optimum tube operation. The spacing between the cathode 32 and anode rods 34 is selected to obtain a suitable firing potential with the particular gas pressure provided in the tube envelope.

An apertured insulating plate 46 of mica or the like is threaded over the cathode pins 40 and 42 and the anode pins 34 and serves to prevent sputtered cathode material from forming a continuous path between any two adjacent anode pins.

Each tube also includes a fine mesh screen electrode 50 which extends along the length of the envelope and lies between the cathode and the envelope. The screen is provided to prevent sputtered cathode metal from depositing on the envelope and rendering it opaque.

An auxiliary electrode 56 is mounted in each tube 20 to 26 for providing memory, that is, for rendering each tube capable of being turned on by an input pulse and remaining on after the input pulse is removed. The auxiliary electrode operates in the nature of an anode and can cause cathode glow but it is positioned and designed so that it supports cathode glow at a higher potential difference than the anodes 34. Thus, in the form of the invention shown in FIG. 2, the auxiliary electrode is a pin or rod which is smaller than the anode pins and is spaced farther from the cathode than the anodes. The desired characteristics for the auxiliary electrode might also be obtained by coating a pin with an insulating material or by placing a screen around it, or the like.

The display device of the invention might also use cathode glow tubes of the type shown in FIGS. 3 and 4. This modified tube 60 includes the envelope 30 and elongated cathode 32; however, the anodes 64 comprise elongated wires or rods extending along the length of the tube parallel to, and surrounding, the central cathode 32. The anodes are spaced radially equidistantly from the cathode and are coupled to tube pins 66 which may all be sealed in the same end of the envelope, or they may be distributed at both ends of the envelope. An auxiliary memory electrode 70 may be provided positioned more remote from the central cathode than any of the anodes. The auxiliary electrode may be in the form of a rod or pin or the like.

Referring to FIG. 5, the various tubes 20 to 26 are mounted on the insulating disk 28, with the anode pins, the cathode pins, and the auxiliary electrode pins extending through apertures 74 provided in the plate. With tubes of the type shown in FIG. 3, the pins 66 would be bent perpendicular to the axis of the tubes for insertion in an insulating disk. The apertures are lined with conductive material or with conductive inserts (not shown) to make electrical contact with the pins. Thus, each tube, in effect, rests on one surface of the disk, the front surface, and the pins extend through the disk so that they are accessible from the opposite or rear surface of the disk.

In the device 10, the anode electrodes of the various tubes 21 to 26 are interrelated or programmed so that a separate anode group is provided for each character to be represented and each anode group is adapted to be operated by the application of a single potential to a single external electrical contact. The anode groups are arranged by means of a printed circuit which is provided on the disk

28. The conductive lines may all be provided on both the front and rear surfaces of the disk (FIGS. 5 and 6), with the various conductive lines thereof interconnecting selected anodes 34 to provide the desired individual anode groups. Referring to the rear surface of the disk (FIG. 6), assuming that tubes 20 and 21 are used to represent numeral "1," then one anode pin in tube 20 is connected to one anode pin in tube 21 by conductive line 80 which terminates at a terminal 84 at the edge of the disk. Similarly, assuming that tubes 25, 20, and 21 are used to represent numeral seven, then one anode pin in each of these tubes is connected in a group by conductive line 88 which terminates on another terminal 84 on the disk. The various anode groups are similarly connected together by a conductive line which is connected to a terminal in the edge of the disk.

All of the cathode pins are also connected together and to a terminal 84. The cathode connecting leads 90 are shown on the front surface of disk 28 (FIG. 5). In order to electrically isolate the glow cathodes from each other, a resistor 92 is connected in series with each cathode. The resistors 92 can be mounted directly on plate 28. All of the auxiliary electrodes 56 are also connected together by a conductive line (not shown) and to a terminal 84. All of the conductive lines required are not shown because their layout fabrication by those skilled in the art is a relatively simple matter.

In operation of a display device embodying the invention, the insulating plate 28 carrying the various glow elements is inserted in a suitable socket in which terminals 84 make electrical contact. In one suitable circuit shown in FIG. 7, the terminal 84, which is connected to the various cathodes and cathode resistors, is connected to a source of reference potential such as ground. The terminal 84, which is connected to all of the memory pins, is connected through a switch 96 to a source of positive D.C. potential V which may be about 200 volts. Each of the terminals 84, which is connected to a group of anode pins, is connected through a switch 98 to a bus 100 which is coupled to a positive D.C. potential V of about 200 volts.

When it is desired to turn on a selected cathode, the memory switch 96 is closed and one of the switches 98 which controls the anode group associated with the desired cathodes is closed, and approximately 200 volts is applied to these anodes. The resulting potential difference between the anodes and associated cathodes causes the cathodes to glow, and the desired numerical indication may be seen. If desired, the closed switch 98 may then be opened to remove the energizing pulse, and, with the switch open and no potential on the anode pins, the potential on the memory or auxiliary pin maintains the established cathode glow. If it is desired to cause another cathode to glow, the memory switch 96 is opened first and then closed and then the switch 98 associated with the next desired anodes is closed, and the potential applied to the anodes causes the associated cathodes to glow. In this way, by selectively operating the switches in the manner described above, any desired numerical indication may be displayed in the device 10.

It is clear that various modifications may be made in practicing the invention in view of the principles set forth above. For example, electrical pulses may be utilized in place of the switches 96 and 98 described above. In addition, the various printed circuit lines on the board 28 may be arranged in any suitable manner on one or both surfaces of the insulating support plate.

What is claimed is:

1. A display device comprising

a plurality of separate glow tubes,

each glow tube comprising a gas-filled envelope containing a glow cathode and a plurality of anode electrodes, each cathode being adapted to glow when operating potential is applied between it and any one of its associated anodes,

a plurality of conductive pins, one connected to the cathode and one to each anode, said pins extending outside the envelope of each tube,

an apertured insulating plate,

each tube being mounted on said insulating plate with said pins inserted in and extending through holes in said plate,

a plurality of conductive lines present on a surface of said insulating plate and electrically connecting the anodes of said tubes in groups with each group including one anode from each of a plurality of said tubes,

each group of anodes being adapted to cause a different group of cathodes to glow with each group of cathodes representing a different character,

a plurality of contact terminals on said insulating plate,

each conductive line which connects together a group of anodes being electrically connected to one of said contact terminals on said insulating plate whereby an electrical signal applied to a terminal is also applied to a selected group of anode electrodes to cause a selected group of cathodes to glow and provide a representation of a character.

2. The device defined in claim 1 wherein said tubes are elongated in form and are oriented in a matrix which is generally in the form of a figure eight.

3. The device defined in claim 1 wherein each tube includes an auxiliary memory electrode which operates in the nature of an anode.

4. The device defined in claim 1 wherein each tube the cathode comprises an elongated metal strip and the anodes comprise a plurality of metal pins spaced uniformly from said cathode, and a metal screen is provided between the cathode and the envelope of the tube.

5. The device defined in claim 1 wherein in each tube the cathode comprises an elongated metal strip positioned on the axis of the tube and the anodes comprise metal pins oriented perpendicular to said cathode.

6. The device defined in claim 1 wherein each tube the cathode comprises an elongated metal strip positioned on the axis of the tube and the anodes comprise metal pins oriented perpendicular to said cathode, and an auxiliary memory electrode operable in the nature of an anode but having different electrical characteristics is mounted in operative relation with the cathode.

7. The device defined in claim 1 wherein each tube the cathode comprises an elongated metal strip positioned on the axis of the tube and the anodes comprise metal pins oriented perpendicular to said cathode, and an auxiliary memory electrode comprising a metal pin is provided spaced farther from said cathode than said anodes are spaced.

8. The device defined in claim 1 wherein in each tube said cathode comprises a metal strip oriented on the tube axis and said anodes comprise elongated wires oriented parallel to and surounding said cathode.

References Cited by the Examiner

UNITED STATES PATENTS

1,906,960	5/33	Harris	340—343
2,227,739	1/41	Pollard	40—130 XR
2,423,814	7/47	Mettler	40—130 XR
2,575,517	11/51	Hagen	315—84.6
2,920,408	1/60	McGuire	40—130
2,925,530	2/60	Engelbart	315—84.6
2,925,531	2/60	Hart	315—84.6
2,943,237	6/60	Bell	315—84.6
2,957,098	10/60	Bernstein	315—336 XR

FOREIGN PATENTS

462,022	2/37	Great Britain.

NEIL C. READ, *Primary Examiner.*

JEROME SCHNALL, *Examiner.*