(12) INTERNATIONAL APPLICATION PUBLISHED UNDER THE PATENT COOPERATION TREATY (PCT)

(19) World Intellectual Property Organization
International Bureau

(43) International Publication Date
26 July 2018 (26.07.2018)

WIPO | PCT

(10) International Publication Number
WO 2018/136004 A1

(51) International Patent Classification:
B25J 9/14 (2006.01) *F15B 15/00* (2006.01)
A61H 1/02 (2006.01)

(21) International Application Number:
PCT/SG2018/050028

(22) International Filing Date:
17 January 2018 (17.01.2018)

(25) Filing Language: English

(26) Publication Language: English

(30) Priority Data:
10201700565X 23 January 2017 (23.01.2017) SG

(71) Applicant: **NATIONAL UNIVERSITY OF SINGAPORE** [SG/SG]; 21 Lower Kent Ridge Road, Singapore 119077 (SG).

(72) Inventors: **YEOW, Chen Hua**; c/o National University of Singapore, Faculty of Engineering, Department of Biomedical Engineering, 21 Lower Kent Ridge Road, Singapore 119077 (SG). **YAP, Hong Kai**; c/o National University of Singapore, NUS Graduate School for Integrative Sciences and Engineering, 21 Lower Kent Ridge Road, Singapore 119077 (SG). **ANG, Wee Keong Benjamin**; c/o National University of Singapore, Yong Loo Lin School of Medicine, Department of Medicine, 21 Lower Kent Ridge Road, Singapore 119077 (SG). **LIANG, Xinquan**; c/o National University of Singapore, Faculty of Engineering, Department of Biomedical Engineering, 21 Lower Kent Ridge Road, Singapore 119077 (SG).

(74) Agent: **POH, Chee Kian, Daniel**; Marks & Clerk Singapore LLP, Tanjong Pagar, P O Box 636, Singapore 910816 (SG).

(81) Designated States *(unless otherwise indicated, for every kind of national protection available)*: AE, AG, AL, AM, AO, AT, AU, AZ, BA, BB, BG, BH, BN, BR, BW, BY, BZ, CA, CH, CL, CN, CO, CR, CU, CZ, DE, DJ, DK, DM, DO, DZ, EC, EE, EG, ES, FI, GB, GD, GE, GH, GM, GT, HN, HR, HU, ID, IL, IN, IR, IS, JO, JP, KE, KG, KH, KN, KP, KR, KW, KZ, LA, LC, LK, LR, LS, LU, LY, MA, MD, ME, MG, MK, MN, MW, MX, MY, MZ, NA, NG, NI, NO, NZ, OM, PA, PE, PG, PH, PL, PT, QA, RO, RS, RU, RW, SA, SC, SD, SE, SG, SK, SL, SM, ST, SV, SY, TH, TJ, TM, TN, TR, TT, TZ, UA, UG, US, UZ, VC, VN, ZA, ZM, ZW.

(84) Designated States *(unless otherwise indicated, for every kind of regional protection available)*: ARIPO (BW, GH, GM, KE, LR, LS, MW, MZ, NA, RW, SD, SL, ST, SZ, TZ, UG, ZM, ZW), Eurasian (AM, AZ, BY, KG, KZ, RU, TJ, TM), European (AL, AT, BE, BG, CH, CY, CZ, DE, DK, EE, ES, FI, FR, GB, GR, HR, HU, IE, IS, IT, LT, LU, LV, MC, MK, MT, NL, NO, PL, PT, RO, RS, SE, SI, SK, SM, TR), OAPI (BF, BJ, CF, CG, CI, CM, GA, GN, GQ, GW, KM, ML, MR, NE, SN, TD, TG).

Declarations under Rule 4.17:
— *of inventorship (Rule 4.17(iv))*

Published:
— *with international search report (Art. 21(3))*

(54) Title: A FLUID-DRIVEN ACTUATOR AND ITS APPLICATIONS

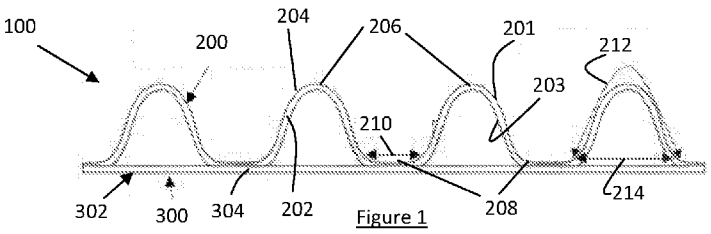

Figure 1

(57) Abstract: A Fluid-driven Actuator and its Applications A fluid-driven actuator 100 is disclosed herein. In a specific embodiment, the fluid-driven actuator 100 comprises a bending actuator 200 including a first wall portion 201, a second wall portion 203 cooperating with the first wall portion 201 to define an undulating actuator profile. The bending actuator 200 also includes an inner fluid bladder 202 disposed between the first and second wall portions 201,203 and following the undulating actuator profile. The fluid-driven actuator 100 further comprises a restraint member 300 arranged to cooperate with the bending actuator 200 to produce a plurality of motions in response to fluid supplied to the inner fluid bladder 202. Methods of producing the fluid-driven actuator are also disclosed.

WO 2018/136004 A1

A Fluid-driven Actuator and its Applications

Background and Field

The invention relates to a fluid-driven actuator which may be used for assistive, rehabilitation, prosthetic, medical related applications or even industrial applications.

Soft actuators and related actuation systems have been used for assistive, rehabilitation, prosthetic, and manipulation applications. Upon fluid pressurization, the soft actuators are able to produce complex motions, forces and torques with multiple degrees of freedom (DOFs). The soft actuators can be integrated with industrial robotic arms for manipulation applications. Due to their inherent compliance and ability to adapt to the shape of the enclosed objects, the soft actuators can be useful when handling delicate objects or objects with part-to-part variance.

The soft actuators can be further integrated with wearable platforms, such as (but not limited to) soft glove, elbow brace, and belt for wearable applications such as soft wearable robotic exoskeletons, prosthetics, and supernumerary robotic arm or finger. These wearable platforms provide assistance and augmentation of activities of daily living and task-specific rehabilitation for human including healthy people, laborers, elderly, and patients with impaired mobility.

A most common barrier to adoption of assistive devices is user acceptance. End users are primarily concerned with cost, safety and ease of use of the assistive devices. Thus, a challenge is to develop assistive devices such as exoskeletons that are comfortable, affordable and functional. Prior consultation with clinicians has emphasized that the assistive device should not require a steep learning curve and is easy to be put on/taken off. In addition, the assistive

devices should be flexible enough so that the assistive devices do not restrict the natural motions of a human joint and produce a wide range of motions.

It is desirable to provide a fluid-driven actuator which addresses at least one of the drawbacks of the prior art and/or to provide the public with a useful choice.

Summary

In a first aspect, there is provided a fluid-driven actuator comprising a bending actuator including a first wall portion, a second wall portion cooperating with the first wall portion to define an undulating actuator profile, and an inner fluid bladder disposed between the first and second wall portions and following the undulating actuator profile, and a restraint member arranged to cooperate with the bending actuator to produce a plurality of motions in response to fluid supplied to the inner fluid bladder.

The described embodiments enable the fluid-driven actuator to be customizable and provide natural and compliant actuation. Also, different methods may be used to make the fluid-driven actuator and allows various materials such as fabrics to be used which reduces the weight of the assistive device. With the possibility of using soft and flexible components (soft actuators, soft interfaces) that are cheaper and lighter, when the fluid-driven actuator is incorporated into an assistive device, the device is more comfortable, wearable and affordable than the current devices in the market. Therefore, it has the potential to reduce the risks and barriers to market entry.

In one embodiment, the restraint member may be fixedly coupled to the bending actuator to form a plurality of folds to define the undulating actuator profile.

In another embodiment, the restraint member may be detachably coupled to the bending actuator to form a plurality of folds to define the undulating actuator profile. In such an embodiment, each one of the plurality of folds may form a fold width which is adjustable by a user. The bending actuator may include a

plurality of flexion locking mechanisms, and the restraint member may include a plurality of restraint locking mechanisms arranged to be selectively attached to respective ones of the plurality of flexion locking mechanisms.

Preferably, each one of the plurality of folds may be spaced apart from each other. The plurality of folds may include segments of folds spaced apart from each segment. The number of folds within each segment may be different. Alternatively, the number of folds within each segment may be the same. In a specific embodiment, the restraint member may be cylindrical and each segment of folds may be arranged around the restraint member.

Preferably, the fluid-driven actuator may further comprise a secondary bending actuator having an inner secondary fluid bladder. The secondary bending actuator may be arranged in opposing relations with the bending actuator with each fold of the secondary bending actuator in registration with respective folds of the bending actuator. The secondary bending actuator may be arranged above the bending actuator with each fold of the secondary bending actuator in registration with respective folds of the bending actuator.

Advantageously, the inner secondary fluid bladder and the inner fluid bladder may be arranged to be supplied with fluid independently. The secondary fluid bladder may include at least two different segments which are arranged to be supplied with fluid independently.

Preferably, the inner fluid bladder may include at least two different segments which are arranged to be supplied with fluid independently.

The fluid-driven actuator may further comprise a plurality of the bending actuators, and pairs of the bending actuators may be arranged in opposing relations at respective segments of the restraint member, wherein the pair of the bending actuators in one segment is oriented differently from the other pair of bending actuators in another segment. The plurality of bending actuators may further include a further pair of bending actuators next to each other in a further

segment. Preferably, the restraint member may include a strain limiting layer for causing the bending actuator to flex in response to fluid supplied to the inner fluid bladder.

Advantageously, the restraint member may include an integrally formed inner straightening fluid bladder, and the inner straightening fluid bladder may be arranged to straighten the restraint member longitudinally in response to fluid supplied to the inner straightening fluid bladder.

The fluid-driven actuator may be made of TPU coated fabric, one or more layers of polymer, or network of fibres. Advantageously, the inner fluid bladder may be integrally formed with the bending actuator.

It is envisaged that the bending actuator may be combined or used with a conventional actuator. For example, the fluid-driven actuator may comprise a bellow-type actuator; and the bending actuator is arranged on the bellow-type actuator.

The fluid-driven actuator has a variety of applications and uses. For example, in further aspects, there is provided an assistive device for rehabilitation or prosthetic applications, a robotic glove or an exoskeleton brace for a limb, comprising at least one fluid-driven actuator as discussed above.

In a further aspect, there is provided a method of producing a fluid-driven actuator according to the above features, comprising integrally forming the bending actuator with the inner fluid bladder. Preferably, the integrally forming may include forming an elongate actuator having the inner fluid bladder by casting or molding; and folding the elongate actuator to form the bending actuator.

The method may further comprise attaching the bending actuator to the restraint member.

In an exemplary embodiment, the method may further comprise 3D printing the bending actuator with the inner fluid bladder.

It is also possible that the method may comprise bonding a TPU-coated fabric to form the inner fluid bladder; and folding the inner fluid bladder to form the bending actuator. In this case, the method may further comprise bonding the bending actuator to the restraint member.

It should be appreciated that features relevant to one aspect may also be relevant to the other aspects.

Brief Description of the Drawings

An exemplary embodiment will now be described with reference to the accompanying drawings, in which:

Figure 1 is a front view of a fluid-driven actuator having an inner fluid bladder and in an inactive state according to a preferred embodiment;

Figure 2 shows the fluid-driven actuator of Figure 1 with the inner fluid bladder inflated so that the fluid-driven actuator is in an active state to produce a bending motion;

Figure 3 shows the fluid-driven actuator of Figure 1 in an active state to produce a straightening motion;

Figure 4 illustrates steps to produce the fluid-driven actuator of Figure 1 using fabric, heat press and ultrasonic welding;

Figure 5(a) is a pictorial view of the fluid-driven actuator produced using the method of Figure 4, and Figures 5(b) and 5(c) illustrate the possible actuation motions of the fluid-driven actuator;

Figures 6a and 6b describe an alternative method of forming a fabric-based fluid-driven actuator;

Figure 6c illustrates a fluid-driven actuator produced from the method of Figures 6a and 6b, and Figure 6d is a cross-sectional view in direction A-A of the fluid-driven actuator of Figure 6c;

Figure 7 comprising Figures 7a-7d describe an exemplary process for flat seam tube bonding a fabric as used in the alternative method of Figures 6a and 6b;

Figure 8a illustrates the fluid-driven actuator of Figure 6c in an inactive state, and Figure 8b illustrates the fluid-driven actuator of Figure 8a in an active state;

Figure 9a illustrates exemplary bend radii of the fluid-driven actuator of Figure 5a at different air pressures;

Figure 9b is a schematic of a customized force measurement system to measure the maximum blocked tip force exerted by the fluid-driven actuator of Figure 9a over increasing pressures;

Figure 9c is a graph illustrating results from the force measurement system of Figure 9b;

Figure 9d is a schematic of a force setup apparatus to measure resistive grip force applied by the fluid-driven actuator of Figure 9a during pressurization;

Figure 9e is a graph illustrating the results from the force setup apparatus of Figure 9d;

Figure 10 is a graph illustrating torque measurements at different flexion angles of the fluid-driven actuator of Figure 8a;

Figures 11a and 11b are two examples of the fluid-driven actuator of Figure 1 formed using molding or casting method;

Figure 11c is an air inlet for use with the exemplary fluid-driven actuators of Figures 11a and 11b to allow air to be supplied into the fluid-driven actuator;

Figure 12a illustrates side views of the second fluid-driven actuator of Figure 11b;

Figure 12b illustrates how a second actuator body of the second fluid-driven actuator of Figure 11b is folded to form a bending actuator with an integrally formed fluid bladder;

Figure 13a illustrates the second fluid-driven actuator of Figure 12b in an inactive state, and Figure 13b illustrates the second fluid-driven actuator of Figure 13a in an active state;

Figure 14 is a table to illustrate settings for a Simplify 3D slicer software to produce the fluid-driven actuator of Figure 1 using 3D printed technology;

Figure 15A illustrates a cross sectional view of a 3D printed actuator in the form of a pneumatic actuator based on the setting of Figure 14;

Figure 15B an enlarged cross sectional view of portion AA of Figure 15A to illustrate an inner bladder or cavity more clearly;

Figure 15C is an enlarged cross sectional view of portion BB of Figure 15A to illustrate a connecting section more clearly;

Figure 16a illustrates the 3D printed pneumatic actuator of Figure 15A in an inactive state; and Figure 16b illustrates the 3D printed pneumatic actuator of Figure 15A in an active state;

Figures 17a and 17b illustrate the pneumatic actuator of Figure 15A operated between an inactive and an active state respectively to illustrate a twisting action;

Figure 18 illustrate the pneumatic actuator of Figure 15A with the strain limiting layer inflated to straighten the pneumatic actuator;

Figure 19 illustrates a robotic glove comprising at least one fluid-driven actuator of Figure 1 as an exemplary application;

Figure 20a illustrates one of the actuator-finger pockets of the robotic glove of Figure 19 removed to show one of the fluid-driven actuators;

Figure 20b is a palmar view of the robotic glove of Figure 19;

Figure 20c illustrates that the robotic glove of Figure 19 may be folded to reduce its size;

Figure 20d illustrates one of the fluid-driven actuators being pressurized to flex an index finger;

Figure 20e illustrates the secondary actuator of the fluid-driven actuator of Figure 20d being pressurized to extend the index finger;

Figure 21 is a schematic block diagram of an electro-pneumatic control system arranged to control the fluid-driven actuator used in the robotic glove of Figure 19;

Figure 22 is a GUI of a customized software application as part of a user control device to control the fluid-driven actuator of Figure 21;

Figures 23a, 23b and 23c illustrate a button system having a plurality of buttons which may be depressed by a user to control the actuation of the fluid-driven actuator of Figure 21;

Figures 24a and 24b illustrate the robotic glove of Figure 19 being subject to an intention-driven strategy which is one of the control modes of the GUI of Figure 22;

Figure 24c is a graph illustrating muscle signals collected from certain muscles during a power grip as initiated by the robotic glove as illustrated in Figure 24a;

Figures 25a and 25b illustrate how the robotic glove of Figure 19 may be subjected to a bilateral rehabilitation training mode;

Figures 26 and 27 illustrate how the corrugation or undulating profile of a bending actuator of the fluid-driven actuator may be adjusted or customized;

Figure 28 illustrates a relationship between fold length and fold width of a fold of the corrugated bending actuator of Figures 26 and 27;

Figures 29a and 29b illustrate two exemplary applications of being able to customize the corrugated bending actuator of Figures 26 and 27;

Figure 30 illustrates the fluid-driven actuator of Figure 1 having different types of folds for the corrugated bending actuator;

Figures 31a to 31f illustrate the effects of having a multi-layer folding in the fluid-driven actuator of Figure 1;

Figures 32a to 32c illustrate effects of combining the fluid-driven actuator of Figure 1 with a conventional bellow-type actuator;

Figures 33a to 33d show how two fluid-driven actuators of Figure 1 may be secured to a common restraint member to create different bending motions;

Figure 33e shows a variation of a pneumatic actuator of Figure 18;

Figure 34 is an exploded view an arm fluid-driven actuator based on the working principles of the fluid-driven actuator of Figure 1;

Figure 35 illustrates a robotic arm based on the arm fluid-driven actuator of Figure 34 and made from fabric;

Figure 36a illustrates a multi-segment robotic arm similar to the robotic arm of Figure 35 but with multi-segments to achieve a more complex bending modality;

Figure 36b is a simplified representation of the multi-segment robotic arm of Figure 36a to illustrate the bending modality;

Figure 37a illustrates a multi-degree robotic arm which is able to bend or flex in varying angles in a three-dimensional space;

Figure 37b is a simplified representation of the multi-degree robotic arm of Figure 37a to illustrate the flexing degrees;

Figure 38a illustrates an alternative multi-degree robotic arm called fabric-based soft robotic arm (SRA) in unassembled form that can manipulate objects within a 3-dimensional workspace;

Figure 38b illustrates the SRA of Figure 38a in assembled form;

Figures 39a and 39b show the fabrication of the SRA of Figures 38a and 38b which has a one long cylindrical SRA main body and a diameter of 6.6cm;

Figures 40a to 40c illustrate how to fabricate a joint actuator to be used in the SRA of Figures 38a and 38b;

Figure 41a shows a gripper of the SRA of Figures 38a and 38b being arranged to grab objects of different sizes and shapes; and Figure 41b illustrates different motions of the SRA;

Figure 42 is a simplified diagram of the SRA of Figures 38a and 38b being worn by a user as a fabric-based supernumerary arm;

Figures 43a to 43e illustrates CAD models of various parts of an exoskeleton glove which includes at least one fluid-driven actuator of Figure 1;

Figure 44 is a perspective view of the assembled exoskeleton glove of Figures 43a to 43e which is fully-polymer based;

Figure 45 illustrates the exoskeleton glove of Figure 44 from the palmar view;

Figure 46 illustrates the exoskeleton glove of Figure 45 with one of its finger actuators flexed; and

Figures 47a and 47b illustrates an exoskeleton elbow brace and an exoskeleton wrist brace having at least one fluid-driven actuator of Figure 1.

Detailed Description of Preferred Embodiment

Figure 1 illustrates a fluid-driven actuator 100 in an inactive state according to a preferred embodiment. The fluid-driven actuator 100 includes a bending actuator 200 having a first wall portion 201 and a second wall portion 203 cooperating with the first wall portion 201. The first and second wall portions 201,203 define an undulating actuator profile as formed by a number of folds 204 which form a series of ridges 206 and grooves 208. In the embodiment of Figure 1, there are four folds 204 resulting in four ridges 206 and three grooves 208. The folds 204 of the bending actuator 200 thus forms fold spacings 210 between folds 204 and each fold 204 also has a fold length 212 and fold width 214.

The fluid-driven actuator 100 further includes an inner fluid bladder 202 disposed between the first and second wall portions 201,203. In other words, the inner fluid bladder 202 follows the undulating actuator profile. Since the inner fluid bladder 202 also has the undulating actuator profile of the bending actuator 200, longitudinal axis of the inner fluid bladder 202 also forms the folds 204. In this embodiment, the inner fluid bladder's internal chamber 202 is arranged to be supplied with compressed fluid to expand or inflate the inner fluid bladder 202 and this will be explained further later.

The fluid-driven actuator 100 further includes a restraint member 300 arranged to cooperate with the bending actuator 200. In this embodiment, the restraint member 300 is in the form of a secondary actuator 302 which is generally flat and elongate. The secondary actuator 302 is bonded to the grooves 208 of the bending actuator 200 and includes a secondary inner fluid bladder 304, and Figure 1 illustrates the secondary actuator 302 in an inactive state since the secondary inner fluid bladder 304 is not inflated. In other words, similar to the

inner fluid bladder 202 of the bending actuator 200, the secondary inner fluid bladder 304 is arranged to be supplied with compressed air to expand or inflate the secondary inner fluid bladder's chamber 304, which would produce a linear or straightening motion and thus, the secondary actuator 302 may also be regarded as an extension actuator.

To enable the fluid-driven actuator 100 to produce a plurality of motions, compressed air or pneumatic pressure is supplied to either or both of the inner fluid bladders 202, 304. Figure 2 illustrates pressured air being supplied to the inner fluid bladder 202 to inflate the entire bending actuator 200 and as shown, the creases or folds 204 would swell as well. Since one side of the bending actuator 200 is bonded to the secondary actuator 302, elongation on the bonded side is restricted. Therefore, the fluid-driven actuator 100 would bend towards the bonded side at the grooves 208 due to the inflation of the folds 204. As a result, by adjusting the pressure supplied to the bending actuator 200 and/or the secondary actuator 302, the bending modality of the fluid-driven actuator 100 can be controlled. When the secondary actuator 302 is supplied with ample air in the secondary inner fluid bladder 304, this can counter the effect of the expanded bending actuator 200 and the fluid-driven actuator 100 would thus straightened again as shown in Figure 3. In this way, the secondary actuator 302 cooperates with the bending actuator 200 to produce a plurality of flex motions, such as bending, twisting, straightening, extending and other complex motions with varying forces and torques with multiple degrees of freedom (DOF).

Three exemplary manufacturing or fabrication techniques of the fluid-driven actuator 100 would next be described, in particular integral forming of the inner fluid bladders 202,304, and they are:

A. Bonding process (using textiles and fabrics through heat press and ultrasonic welding);
B. Casting/molding (using polymers such as, but not limited to Thermoplastic Urethane (TPU), Thermoplastic Elastomer (TPE), Silicone Rubber); and

C. 3D printing and additive manufacturing (using polymers such as, but not limited to Thermoplastic Urethane (TPU), Thermoplastic Elastomer (TPE).

A. Bonding process (using textiles and fabrics through heat press and ultrasonic welding);

Figure 4 illustrates the steps to produce the fluid-driven actuator 100 using this method which uses pieces of flexible thermoplastic polyurethane (TPU)-coated fabrics. As this type of fabric is flexible but not extensible, it minimizes energy losses due to the work stored as elastic energy and increases the efficiency of fluid power transmission. In step 402, two pieces of TPU coated fabric 450,452 which are generally flat and elongate and of required lengths are used to form an air bladder 454a. A neoprene sponge (733-6731, RS Components, Singapore) is used to serve as a spacer 456 to reduce the restriction of airflow within the air bladder 454a and the spacer 456 is sandwiched between the two pieces of TPU coated fabric 450,452. Further, a tube adapter 458 is inserted into the upper TPU coated fabric 450 and a latex rubber 460 is inserted to the interface between the upper TPU coated fabric 450 and the tube adapter 458 in order to prevent air leakage.

At step 404, the two pieces of TPU coated fabric 450,452 are subject to either mechanical pressure using a heat sealer or by industrial standard ultrasonic welding to seal the edges of the TPU coated fabrics 450,452 to form the air bladder 454a. In other words, after the sealing, an internal air chamber is formed within the air bladder 454a. Steps 402 and 404 are similarly performed to produce a second air bladder 454b as shown in step 406 of Figure 4.

Next, at step 408, the first air bladder 454a is folded to form the bending actuator 200 of Figure 1 with the series of folds 204 and the second air bladder 454b is used as the secondary actuator 302 of Figure 1. In other words, the second air bladder 454b is bonded to the first air bladder 454a at the grooves 208 of the folds 204 using ultrasonic welding and the fluid-driven actuator 100 is

thus formed in step 410 with the first air bladder 454a formed integrally within the bending actuator 200, and the second air bladder 454b integrally formed within the secondary actuator 302. Upon pressurization, the corrugated fabric layers of the bending actuator 200 and the secondary actuator 302 expand and unfold. The secondary actuator 302 serves as the restraint member layer to restrict the elongation at the bottom surface. This results in the bending of the fluid-driven actuator 100 upon actuation as can be appreciated from Figure 5(a) to 5(c).

Figure 5(a) is a pictorial view of the fluid-driven actuator 100 produced using the method of Figure 4, and Figures 5(b) and 5(c) illustrate the possible actuation motions of the fluid-driven actuator 100 when used as a finger flexion actuator that allows bending motion that supports the finger flexion and thumb with slanted fold near the proximal side to allow bending and twisting motions that support the thumb interphalangeal (IP), metacarpophalengeal (MCP), and carpometacarpal (CMC) joint motions that are more complicated.

Combining both bending and extension actuators 200,302, the fluid-driven actuator 100 is able to generate flexion and extension torques to support bidirectional movements of the joints (such as fingers, wrist and elbow). When air is injected into the actuators 200,302, the inner fluid bladders 202,304 would inflate, and the outer fabrics that are asymmetrically designed would guide the motions of the actuators 200,302. The fluid-driven actuator 100 developed in this way generate motions without any external bladder (the fabric itself is the bladder), which further reduce the weight and the complexity of the fabrication process.

In the method of Figure 4, the two fabric pieces 450,452 are heat sealed along the edges but the TPU coating along edges of the fabric pierces 450,452 may be inadequate. Thus, it may be difficult to apply high pressure at the edges of the fabric pieces 450,452 to achieve high stiffness or large force as it may tear the sealed edge.

Thus, an alternative sealing method is proposed and this is further elaborated with reference to Figures 6 and 7. As illustrated in Figure 6, at step 602, a single piece of TPU-coated fabric 500, larger than what was used in the method of Figure 4 is used and two folding lines (Folding Line 1 and 2) marked and a marking tape pasted between the two folding lines. A tube hole 502 is also created at one edge of the TPU-coated fabric 500. At step 604, the TPU-coated fabric 500 is folded inwardly along the two folding lines so that a long edge overlaps with the other long edge and both overlapped portions are then bonded together. This bonding process is further elaborated in Figure 7 which uses an exemplary piece of fabric 504 to explain. Figure 7a shows the piece of fabric 504 laid flat and Figure 7b shows longer edges wrap and overlapped with each other as shown in Figure 7d, which is an end view of Figure 7b. Next, the overlap portions are then sealed using "flat seam tube bonding" to prevent breaking and tearing. Finally, the shorter edges are sealed using the same method as shown in Figure 7c to create an airtight pocket within the fabric 504.

Going back to Figure 6a, after the overlapped portions formed by the longer edges of the fabric 502 are sealed, a tube adapter (not shown) is similarly inserted into the tube hole 502 at step 606, and at step 608 the shorter edges of the fabric 500 are sealed as explained in Figure 7. In this way, an air pocket is created within the fabric 500, and a first air bladder 506 is thus formed. To form a fluid-driven actuator 150, a second air bladder 508 is formed in a similar manner and as can be appreciated from step 610 of Figure 6b, this second air bladder 508 is slightly shorter than the first air bladder 506. The position of the folds and points of the first air bladder 508 to connect to the second air bladder 508 are marked. In step 612, the first air bladder 506 is folded to form a series of folds 506a and grooves 506b with an undulating profile which similarly forms the bending actuator 200, and the second air bladder 508 forms the restraint member. In this variation, the fluid-driven actuator 150 further includes a pre-cut fabric fastener 510 with pairs of opposing straps 512,514 and each pair of opposing strap 512,154 wraps around the second air bladder 508 and the first air bladder 506 and the straps 512,514 are secured at the respective grooves 506b of the first air bladder 506 through heat bonding/ultrasonic welding. Figure

6c illustrates the fluid-driven actuator 150 produced from Figures 6a and 6b, and Figure 6d is a cross-section view of the fluid-driven actuator 150 in a direction A-A.

Figure 8a illustrates the fluid-driven actuator 150 of Figure 6c in an inactive state, whereas Figure 8b illustrates the fluid-driven actuator 150 in an active state. It is found that the fluid-driven actuator 150 achieves better performance, high force of actuation and has virtually no air blockage.

To test the performance, the fluid-driven actuator 100 of Figure 5a is subjected to actuator characterization to determine its bending radius and force/torque output. Specifically, the fluid-driven actuator 100 is characterized in terms of their bend radius, maximum blocked tip force, and resistive grip force upon pressurization.

The bend radius at different pressures was obtained using image analysis software (Image J, National Institute of Health, USA) and normalized to the original length of the actuator. Figure 9(a) illustrates the fluid-driven actuator 100 of Figure 5a with varying bend radius at different air pressures – 30kPa, 50kPa, 60kPa and 70kPa. From the results, Figure 9(a) shows that the fluid-driven actuator reached its minimum bend radius of 0.069 ± 0.003 at 30kPa. Further increase in pressure did not change the bend radius significantly. This normalized bend radius was smaller than the normalized bend radius of 0.081 achieved by elastomeric actuators developed previously.

The maximum blocked tip force exerted by the fluid-driven actuator 100 is measured over increasing pressures using a customized force measurement setup as illustrated in Figure 9(b). The system consisted of a compression load cell (FC22, Measurement Specialties Inc, USA) and a mounting platform. The proximal end of the fluid-driven actuator 100 is mounted on the platform and connected to an air source via a connecting tube. The distal end of the fluid-driven actuator is in contact with the load cell. A constraining platform is positioned on top of the fluid-driven actuator 100. During pressurization, the

fluid-driven actuator 100 flexed and started to contact with the constraining platform, which constrained the height and the curvature of the fluid-driven actuator. This force measurement setup measured the initial blocked tip force generated by the actuator regardless of the bending angle. The force increased with increased pressure (see graph of Figure 9c). In the experiment, the maximum force and maximum actuation pressure tested for the fluid-driven actuator 100 were 14.3N and 70kPa. Compared to the fiber-reinforced actuators which are made from Elastosil M4601 (Shore Hardness 28A) and operates at the pressure range of 275-375kPa as well as the fabric-reinforced actuators which are made from DragonSkin 10 (Shore Hardness 10A) and operates at the pressure range of 120-160kP, the fluid-driven actuator 100 of Figure 5a is able to achieve similar force output at lower pressure.

The resistive grip force applied by the fluid-driven actuator 100 during pressurization is measured using a universal testing machine (Model 3345, Instron, MA, USA), with its schematic shown in Figure 9(d). The fluid-driven actuator 100 is pressurized to 70kPa to enclose and grasp a cylinder with table and the cylinder was pulled upward by the Instron at a fixed velocity (8mm/s) until the cylinder was released from the actuator's grasp. The experiment is repeated three times and the results were averaged and shown in Figure 9(e). The actuator had a maximum resistive grip force of 8.77±1.62N. Considering a friction coefficient of 0.46, the fluid-driven actuator 100 is able to generate a friction force of 4.03N. Assuming five actuators, with each being able to generate the same amount of grip force, the total friction force to counteract the weight of an object would be 20.15N. As the objects of daily living do not weigh more than 1.5kg, the friction force was found to be sufficient to lift most of the objects.

With the extension actuators such as the secondary bladder 302 or the second air bladder 508, the fluid-driven actuators 100,150 can be characterized in terms of their extension torques generated at different flexion angles when they were pressurized at 70kPa. The torque output is obtained using a customized torque rig with a torque transducer (FT01, Forsentek, China) mounted and

using the second air bladder 508 of the fluid-driven actuator 150 of Figure 8a. The torque rig allowed the measurement of torque output of the second air bladder 508 at different fixed flexion angles and the result is shown in Figure 10. The torque output increased with increased flexion angle. It was found that the extension actuator is able to generate a maximum extension torque of 0.31Nm at 70°. Previous studies have quantified the total flexion torque in stroke patients due to spastic finger flexors. The total flexion torque, which is the sum of the flexion torques at the metacarpophalangeal (MCP) joint of four fingers, typically falls within the range of 0.5-4Nm. Assuming all extension actuators were able to generate same amount of extension torque, the total extension torque achieved by four actuators would be 1.24Nm, which is able to counteract flexion torque that is smaller than 1.24Nm and pull the fingers into an open state.

Apart from using TPU-coated fabrics to fabricate the actuator, the fluid-driven actuator 100,150 may be directly casted/molded (industry setting, large scale manufacturing) or 3D-printed (additive manufacturing, small scale prototyping) using polymers such as, but not limited to, Thermoplastic Urethane (TPU), Thermoplastic Elastomer (TPE), Silicone Rubber, to form the folded bladder and sheet-like bladder, and these two other exemplary manufacturing processes would be described next.

B. Casting/molding (using polymers such as, but not limited to Thermoplastic Urethane (TPU), Thermoplastic Elastomer (TPE), Silicone Rubber).

Figure 11a illustrates a first fluid-driven actuator 552 which is shorter than a second fluid-driven actuator 580 illustrated in Figure 11b, with both actuators being formed by casting or molding. The first fluid-driven actuator 552 has a first actuator body 554 casted using polymer with an integrally formed internal fluid bladder (not shown), and a first actuator base 556 which is laser-cut using a 1mm thick polypropylene sheet. The first actuator body 554 is further molded with protruding buttons 558 which extend at regular intervals along a

longitudinal axis of the first actuator body 554. In this embodiment, there are seven buttons 558, although the first two buttons are closer to each other to hold the distal part of the first actuator body 554 in place. However, it should be appreciated that the distance between the first two buttons may be the same as the rest of the buttons or adjusted depending on the length of the first actuator body 554. At the other end of the first actuator body 554, there is an air inlet connector 560 which is arranged to be coupled to an air inlet 562 (see Figure 11c) to inject air into the fluid bladder to inflate the first actuator body 554.

The first actuator base 556 functions as a restraint and has seven apertures 564 formed at intervals along the longitudinal first actuator base 556 to correspond to the seven buttons 558 of the first actuator body 554. Each aperture 564 is slightly smaller than the corresponding button 558 so that each button 558 frictionally fits within each aperture 564 and the aperture 564 can secure the respective buttons 558.

The second fluid-driven actuator 580 as illustrated in Figure 11b is longer as explained above, and in this embodiment, the second fluid-driven actuator 580 has a second actuator body 582 and a second actuator base 584 which is made in a similar manner as the first fluid-driven actuator 580, except that the second actuator body 582 and the second actuator base 584 are longer. In this respect, there are eight buttons 586 on the second actuator body 582 and eight corresponding apertures 588 on the second actuator base 584.

Figures 12a illustrates side views of the second fluid-driven actuator 580 comprising the second actuator body 582 and the second actuator base 584 of Figure 11b and to show the corresponding positions of the buttons 586 and the apertures 588.

To secure the buttons 586 to the apertures 588, the second actuator body 582 is folded to form a plurality of folds 590 to align or register the position of the buttons 586 with the apertures 588 and each button 586 is then inserted snugly through a respective aperture 588, as shown in Figure 12b. In this way, a

corrugated second fluid-driven actuator 580 is formed having the internal fluid bladder similar to fluid-driven actuator 100 of Figure 1 with the second actuator base 584 functioning as restraint member or strain limiting layer.

Figure 13a illustrates the second fluid-driven actuator 580 from another angle in an inactive state, and Figure 13b illustrates the second fluid-driven actuator 580 in an active state, with pressurised air injected into the fluid chamber of the second fluid-driven actuator 580 and the second actuator base 584 cooperating with the second actuator body 582 to cause the second fluid-driven actuator 580 to bend.

It can thus be appreciated that the fluid-driven actuator 100,150 may be directly casted/molded to integrally form the inner fluid bladder and a third exemplary process for making the fluid-driven actuator 100,150 is described next.

C. 3D printing and additive manufacturing (using polymers such as, but not limited to Thermoplastic Urethane (TPU), Thermoplastic Elastomer (TPE).

The fluid-driven actuator 100,150 may also be 3D-printed (additive manufacturing, small scale prototyping) and in this instance, the fluid-driven actuator 100,150 is 3D printed from a TPU based flexible material, Ninjaflex™, and other flexible filaments for 3D printing may be used.

A 3D printer is set up and controlled via Simplify3D™ slicer software and Figure 14 is a table to illustrate the settings for the Simplify 3D slicer software to produce a 3D printed fluid-driven actuator 600.

Figure 15A illustrates a cross sectional view of a 3D printed actuator in the form of a pneumatic actuator 600 similar to the fluid-driven actuator 100,150. As shown in Figure 15A, the pneumatic actuator 600 has a 3D printed bending actuator 602 having a plurality of folds 604 to form a undulating profile and a 3D printed strain limiting layer 606 functioning as a restraint member and which is

fixedly attached to the 3D printed bending actuator 602 at predetermined intervals and a connecting section 608 for an air source. The bending actuator 602 has an integrally formed 3D printed inner bladder or cavity 610 forming a fluid chamber extending along the longitudinal axis of the bending actuator 602 and the inner bladder or cavity 610 follows the undulating profile of the bending actuator 602. The strain limiting layer 606 has a strain limiting inner cavity 612 forming another fluid chamber extending along the longitudinal axis of the strain limiting layer 606. Figure 15B is an enlarged cross sectional view of portion AA of Figure 15A to show the inner cavity 610 and strain limiting inner cavity 612 more clearly. Figure 15C is an enlarged cross sectional view of portion BB of Figure 15A to show the connecting section 608 more clearly. It should be appreciated that the strain limiting layer 606 may be 3D printed without the strain limiting inner cavity 612.

Similar to the fluid-driven actuators 100,150, pressurization of the inner cavity 610 of the pneumatic actuator 600 allows different profiles of the pneumatic actuator 600 to be achieved.

Bending – with the strain limiting layer 606 restraining the bladder's expansion, upon pressurization of the inner cavity 610 of the bending actuator 602 (but not the strain limiting inner cavity 612), the bending actuator 602 undergoes expansion at the top whereas the expansion at the bottom is constricted by the strain limiting layer 606, causing a bending profile of the pneumatic actuator 600 to be achieved. If the pressurization is reduced (i.e. pressurized air is sucked out of the inner cavity 610), a straightening profile may be obtained. Figure 16a illustrates the pneumatic actuator 600 in an inactive state (before pressurization) and Figure 16b illustrates the pneumatic actuator 600 in an active state (after pressurization) illustrating the bent profile.

Twisting – the strain limiting layer 606 may be designed to selectively limit the expansion of the bladder 602 upon pressurization so that expansion of the bladder 602 may be limited to one longitudinal side and this causes a twisting profile of the pneumatic actuator 600 to be achieved as shown in Figures 17a

and 17b. Specifically, the strain limiting layer 606 is printed at one side of the bottom surface of the bending actuator 602, and this creates an asymmetrical bending profile. When the bending actuator 602 is pressurized, the pneumatic actuator creates both bending and twisting actions.

Straightening – similar to the fluid-driven actuator 100,150, the strain limiting inner cavity 612 of the strain limiting layer 606 may be inflated with pressurized air and this allows the pneumatic actuator 600 to straighten as shown in Figure 18.

Applications

The fluid-driven actuator 100,150,600 may be adapted for many applications and a number of exemplary applications will be provided here.

i) Soft Robotic Glove for Assistive, Rehabilitation and Prosthetic Applications

Figure 19 illustrates a robotic glove 650 comprising a number of the fluid-driven actuators 100 of Figure 1. The robotic glove 650 includes five actuator-finger pockets 652 attached to respective dorsal sides of each sheaths 654 for the fingers and the thumb of a human hand 656. The robotic glove 650 serves as a compliant interfacing component to the human hand 656, provides minimal mechanical impedance to the finger motion and allows kinematic transparency when the robotic glove is worn by a user. Open palm design is adopted for easy donning and doffing of the glove, especially for stroke patients with their hands typically clenched.

Figure 20a illustrates one of the actuator-finger pockets 652 of Figure 19 removed to show one of the fluid-driven actuators 100, which has the bending actuator attached to the secondary actuator. It is possible that the bending actuator may not be attached to the secondary actuator and in this case, the bending actuator may be inserted into the actuator-finger pocket 652 whereas

the secondary actuator is separately inserted into an extension actuator pocket 658 formed at the palmar side 660 of the robotic glove 650.

The actuator-finger pockets 652 are made from stretchable lycra fabrics as shown in Figure 20b. Each actuator is isolated with respect to the others, and thus the assistance of each finger can be achieved independently, which allows execution of different grasp and release tasks. In this embodiment, as both the glove 650 and the actuators 100 are made from fabric, the glove can also be folded into a smaller size as shown in Figure 20c and stored which is difficult to achieve with traditional hand exoskeleton.

Since it is possible to achieve a fully fabric-based robotic glove 650, the total weight of the glove may be reduced considerably (eg. approximately 99g,). Additionally, inflation of the actuators 100 does not add significant amount of extra weight to the hand as they work under air pressure. Figure 20d illustrates the index finger 662 being flexed or bent due to pressurization of the corresponding fluid-driven actuator 100, and Figure 20e shows the index finger 662 being straightened due to pressurization of the secondary actuator (i.e. extension actuator) of the fluid-driven actuator 100.

An optical-based motion analysis system with eight cameras (Vicon Motion System Ltd., UK) is used to capture the maximum range of motion of the robotic glove 650 to assist the movement of fingers of a healthy subject. Reflective markers were attached to the robotic glove 650 and motion profiles of the index finger and thumb are tracked. The reflective markers are attached to the index finger at locations corresponding to the fingertip, distal interphalangeal (DIP), proximal interphalangeal (PIP) and MCP joints. For the thumb, the reflective markers are attached to IP, MCP, and CMC joints. The fluid-driven actuators are next pressurized at 70kPa. For the index finger, the mean peak flexion angles for DIP, PIP and MCP are measured to be 47.7±8.1°, 89.8±4.4°, and 75.3±3.6° respectively. For the thumb, the mean peak flexion angles for IP, MCP and CMC were 34.0±5.5°, 48.7±4.8°, and 56.0±2.1° respectively.

An electro-pneumatic control system 700 is used to control the robotic glove 650, and specifically actuation of each fluid-driven actuator 100 of the robotic glove 650 to allow isolated control of each fluid-driven actuator 100. Figure 21 is a schematic block diagram of the electro-pneumatic control system 700 arranged to control one actuator 702 as an exemplary fluid-driven actuator 100 for ease of explanation. The actuator 702 includes a pressure sensor 704 (eg. MPX5500DP, Freescale, USA) for detecting and regulating amount of pressurized air within the air bladder of the actuator 702 and is arranged to generated a measured pressure signal P. The robotic glove 650 also includes a force/position sensor 706 disposed on the sheath of the finger associated with the actuator 702 to detect the position or movement of the finger, and is arranged to generate a measured force signal F/θ.

The electro-pneumatic control system 700 includes a controller 708 (eg. Arduino Mega, Arduino) for controlling a miniature solenoid valve 710 (eg. VQ110U, SMC, Japan; Extension Actuators: X-Valve, Parker, USA) and a miniature diaphragm pneumatic pump/air source 712 (eg. D737-23-01, Parker, USA). The controller 700 includes a force/position controller 714 and is arranged to receive a control position signal $e_{F/\theta}$ in response to a force reference signal F/θ_{ref}. and the measured force signal F/θ from the force/position sensor 706. Based on the $e_{F/\theta}$ signal, the force/position controller 714 is arranged to generate a desired air pressure signal P_{ref} which is summed with the measured pressure signal P from the pressure sensor 704 to generate a pressure control signal e_p for a pressure controller 716. The pressure controller 716 then generates a pulse width modulation (PWM) signal to control the pneumatic pump/air source 712 and the valve 710 to regulate the amount of pressurized air to supply into the actuator 702. Broadly, the readings from the pressure sensor 704 is used by the controller 700 to control the activation and deactivation of the valve 710 and the pneumatic pump 712 to achieve the desired air pressure in the actuator 702 in order to produce a desired movement of the actuator 702.

In this embodiment, the electro-pneumatic control system 700 further includes a user control device 718 which may be a computing device (eg. server, laptop, computer, smart phone etc) having a communication module 720 for communicating with the controller 708. The communication may be wired communication or wireless communication such as Bluetooth or via the internet or cloud, for example if a doctor is sending commands remotely to control the controller 708.

The user control device 718 includes a customized software application with a GUI 722, as illustrated in Figure 22, which allows the users, such as the patients and caregivers, to select their desired rehabilitation program and control mode. In this embodiment, four exemplary control modes for the robotic glove 650 are presented, and these include:

(i) button-controlled assistance mode 724;

(ii) cyclic movement training mode 726;

(iii) intention-driven task-specific training mode 728 with electromyography sensors; and

(iv) bilateral rehabilitation training mode 730 with data glove. Additionally, a graph panel 732 is provided real time graphical illustration of the sensor values, such as pressure sensor value as well as real time video 733 of the selected exercise.

(i) button-controlled assistance mode

In this control mode, the user control device 718 further includes a set of manual buttons 734a,734b,734c,734d as illustrated in Figure 23a, 23b and 23c. The manual buttons 734a,734b,734c,734d are communicatively coupled to the controller 708 and this mode provides the most straightforward control method to control the robotic glove 650, without any complicated algorithm. This control mode is particularly suitable for assistive applications, such as assisting patients with their ADLs. A patient is able to depress the physical manual buttons 734a,734b,734c,734d using his non-paretic hand in order to activate the robotic glove 650. The assisted-hand motions can be preprogrammed or hard coded. Figures 22a, 22b and 22c show three preprogrammed assisted-hand motions,

which are power grip, pinch grip, and tripod pinch grip respectively. It is envisaged that these manual buttons 734a,734b,734c,734d may be further integrated with a wheelchair so that wheelchair-bound users, such as patients with spinal cord injury, are able to use the robotic glove to assist them in their ADLs.

(ii) cyclic movement training mode

The GUI 722 is also preprogrammed for cyclic movement training mode 726, for example, cyclical stretching that involves repeated hand closing and opening. Passive cyclical stretching, combining with active repeated task practice, has shown therapeutic effects on clinical task performances and impairment measures for stroke patient with substantial upper extremity impairment. This control strategy allows cyclic movement training of different tasks, such as hand grasping and pinching. In this control mode, the fluid-driven actuators 100, and in in particular the flexion and extension actions, are sequentially activated by software and assist the bidirectional finger flexion and extension. Additionally, the flexion or extension assistances can be selectively turned off depending on the patient's condition. For example, for stroke patients that have the residual ability to voluntarily flex their fingers, the flexion assistance can be turned off so that only extension assistance is provided to open their hands while allowing them to close their hands voluntarily.

(iii) intention-driven task-specific training mode - EMG

In this intention-driven strategy, an open-loop EMG logic is adopted to detect the user intent with two EMG sensors. The control of the robotic glove 650 is achieved by monitoring the state of the muscle signals at the finger flexors and the finger extensors to three conditions: i) 'activate', ii) 'hold', and iii) 'release'. The 'activate' condition is met when the muscle signal from the finger flexors exceeds the flexor threshold. In this condition, the pre-selected group of fluid-driven actuators 100 is pressurized, flexing the fingers as shown in Figure 24a. The 'release' condition is met when the muscle signal from the finger extensors exceeds the extensor threshold. In this condition, the fluid-driven actuators 100 would be pressurized to straighten as shown in Figure 24b and the bending

actuators is depressurized. The fingers would be returned to the extended position. The 'hold' condition is activated when both the 'activate' and 'release' conditions are not met. The actuators will maintain the present condition until the next condition is met. The threshold may be adjusted based on the pathology and residual muscle activity of the user. The user may be required to perform maximum voluntary contraction (MVC), which can be obtained through the GUI 722. Figure 24c shows the muscle signals collected from finger flexors and extensors during the power grip, alongside their corresponding thresholds (which was 40% of FLEXORS-MVC and EXTENSORS-MVC for the particular participant).

(iv) bilateral rehabilitation training mode

In this control mode, the user attempts to perform bimanual ADL tasks simultaneously. It has been found that bimanual therapy is able to promote functional motor recovery with improved upper limb movement coordination and synchronization. A data glove 736 with ability to track the hand kinematics through five individual flex sensors 738 (eg. FS, Spectra Symbol, USA) is worn on the non-paretic hand as shown in Figure 25a in order to detect the voluntary movements of the non-paretic hand and activate the robotic glove 650 on the paretic hand as shown in Figure 25b, simulating the mirror therapy typically used in stroke rehabilitation. In Figure 25b, there three sets of drawings illustrate the user activating the robotic glove 650 with different assisted hand motions via the data glove 736, such as power grip, pinch grip, and full grasp respectively.

It should be appreciated that the GUI 722 may be implemented via a customized smart phone application (app) as part of the user control device 718. The app may communicate wirelessly (Bluetooth or Wi-Fi) with the controller 708 and the sensor data may be fed to the smart phone or cloud-shared to a server.

Apart from being an assistive device, the robotic glove may be used as a prosthetic application, and the robotic glove may be configured to hold and lift objects with different diameters and weights.

As it can be appreciated from the described embodiment, with the fluid-driven actuator 100 having a bending actuator 200 with an integrally formed inner fluid bladder 202, there is greater freedom to manufacture the actuator 100 and in particular, the bending actuator 200 may be fabricated as a straight piece, with actuator locking mechanisms 738, as shown in Figure 26. The restraint member 300 or substrate is thus provided with corresponding restraint member locking mechanisms 740 as well (see Figure 26), and users may adjust or customise the folds 742 of the actuator 100 according to their desired bending profiles and secure the folds via the locking mechanisms as shown in Figure 27.

Figure 28 illustrates the relationship between the fold length 212 and the fold width 214, and the various fold length 214 is represented as Lf3, Lf2 and Lf1 in Figure 27, whereas the fold width 214 is fixed with B3 = B2 = B1. With the fold length 214 fixed, and the fold lengths 212 increased, the actuator 100 would bend more (bending radius curvature decreases) and create a larger force.

With the advantages of customizable bending profiles, the actuator 100 may thus achieve desired actuation at targeted joint location, for example the MCP finger joint and ankle joint shown in Figures 29a and 29b respectively.

Indeed, the described embodiment should not be considered as limitative and there are other variations and possibilities. For example, while it is preferred, the inner fluid bladder 202 may not be integrally formed with the bending actuator 200. Also, the folds 204 of the air bladder 200 may be varied and have different dimensions and sizes, such as that illustrated in Figure 30 which shows five different fluid-driven actuators 100(standard), 100(A), 100(B), 100(C) and 100(D) with different fold dimensions 204(standard), 204(A), 204(B), 204(C) and 204(D).

Further, the fluid-driven actuator 100 may be produced with multilayer folding such as that illustrated in Figure 31a. In Figure 31a, the fluid-driven actuator 100 includes a first corrugated air bladder 742 and a second corrugated air bladder 744 which is aligned with the same corrugation or folds as the first corrugated air bladder. The first corrugated air bladder 742 and the second corrugated air bladder 744 may thus be inflated or expanded independently to achieve different stiffness at selected segments. For example, when the first corrugated air bladder 742 is inflated (but not the second corrugated air bladder 744), the fluid-driven actuator 100 would form a concave bending shape as shown in Figure 31b. When the second corrugated air bladder 744 is actuated, the bending force is enhanced as illustrated in Figure 31c (although the shape may not change much).

Also, the first and second corrugated air bladders 742,744 may be structured differently to create different bending forces at different segments of the fluid-driven actuator 100. For example, the second corrugated air bladder 744 may be formed with two air segments 744a,744b which are independently inflatable as shown in Figure 31d. To create a larger bending force near the first air segment 744a, the first corrugated air bladder 742 is inflated together with the first air segment 744a of the second corrugated air bladder 744 (but not the second air segment 744b) as shown in Figure 31e. On the other hand, inflating the second air segment 744b at the same time, this creates a larger bending force in the second corrugated air bladder 744 as shown in Figure 31f. With such an arrangement, selected segments may be actuated to create a larger bending force at desired positions, while not changing the force at other positions. This may be particularly useful when the actuator 100 is used for rehabilitation, where some joints require a larger force to bend than the other joints. Thus, the fluid-driven actuator 100 maybe adapted according to the actual needs.

The fluid-driven actuator 100 may be combined with a conventional bellow type actuator 750 to enhance the bending and bending force of the bellow-type actuator, as shown in the Figure 32a. For such an application, the fluid-driven

actuator 100 is uniformly folded and wrapped around the bellow-type actuator and secured to the restraint member at selected joints to enhance the bending force when both actuators are pressurized together. It is envisaged that the bending profile and bending force of the combined actuators can be actively adjusted by adjusting the pressure inside the two individual actuators 100,750.

Similarly, the fluid-driven actuator 100 may be actuated at specific segments such as that described above in relation to Figures 31d to 31f, then selected portions would benefit from a higher force such as the distal and central portions as illustrated in Figures 32b and 32c.

Incorporating multiple fluid-driven actuators 100 can create motions with multi degrees of freedom (DOF). For example, Figures 33a to 33d show how two fluid-driven actuators 752,754 being secured to a common restraint member 756 can create three bending motions as depicted by bending arrows A, B and C. Based on this understanding, the fluid-driven actuator 100 may thus be adapted for a human arm, and this would be further elaborated below.

Figure 33e illustrates a pneumatic actuator 770 similar to the pneumatic actuator 600 of Figure 18 but having a strain limiting layer 772 adapted to follow the undulating profile of a bending actuator 774, unlike the strain limiting layer 606 of Figure 18 which is straight. Thus, it should be appreciated that the strain limiting layer 606.772 may adopt other forms/shapes apart from a straight profile. Also, the strain limiting layer 606,772 may be sensorized. i.e. incorporate with sensors such as flex sensors.

Figure 34 is an exploded view of an arm fluid-driven actuator 800 having an upper corrugated bending actuator 802, a lower corrugated bending actuator 804 and a restraint member 806 sandwiched between the upper and lower corrugated bending actuators 802,804. In this example, the restraint member 806 has an inner air cavity (not shown) similar to the secondary bladder. The upper corrugated bending actuator 802 includes an arm segment 808 having arm segment folds 810, and a hand segment 812 having hand segment folds

814 which are closer together than the arm segment folds 810. The lower corrugated bending actuator 804 includes lower arm segment folds 816 in opposing relationships but in registration with the arm segment folds 810 of the arm segment 808 of the upper corrugated bending actuator 802.

In other words, the main difference between the arm segment 808 and the hand segment 812 is the spacing of folds 810,814. For the arm, continuous bending modality with proper bending angle is preferred, and thus, the spacing between two adjacent folds 810 is relatively large, compared with distance between adjacent folds 814 of the hand segment 812. In this way, the folds 810 can hardly affect each other and over bending of one joint is prevented. For the hand segment 812, large bending angle is preferred to achieve grabbing motions of a human hand. Thus, the spacing between the folds 814 is small and there are more amounts of folds 814. The folds 814 can interact with adjacent folds 814, so the bending force is larger.

The restraint member 806 is used to maintain stiffness of the robotic arm, and it can also help release the hand segment 812 from a grabbing motion. By using different heights, widths and spacing of the folds 810,814,816, different bending modalities may be achieved. An example of the parameters of the arm fluid-driven actuator 800 of Figure 34 is provided in Table 1 below:

Table 1:

	Length	Fold Length	Fold Width	Fold Spacing	No. of Folds
Arm segment	55cm	3cm	1cm	8cm	5
Hand segment	25cm	3cm	1cm	1cm	8

With the arrangement of Figure 34, it is possible to create a robotic arm 850 using the arm fluid-driven actuator 800 which has several degrees of Freedom (DoF), including bending in two directions and grabbing an object. The bending

motion and grabbing motion of the robotic arm 850 are similar in the sense of mechanism. Thus, the key point of designing the robotic arm 850 is to make bending actuation of various degrees, namely small bending curvature at arm section and large bending curvature at hand section.

The robotic arm 800 is made from fabric similar to the fluid-driven actuator 100 and this is illustrated in Figure 35.

In addition to the robotic arm 850, the fluid-driven actuator 100 may be adapted for other applications such as:

Multi-segments robotic arm

Figure 36a illustrates a multi-segment robotic arm 820 comprising multi-segments 822 with each segment 822 having a corrugated bending actuator similar to the bending actuator 200 of Figure 1. Each segment 822 is spaced apart from the adjacent segment and is able to bend independently. The segments 822 can thus be controlled separately to achieve a more complex bending modality as shown in Figure 36b which is a simplified representation of the multi-segment robotic arm 820 of Figure 36a. Such a robotic arm 820 may be able to complete tasks in complicated environments.

Robotic Arm with more Degree of Freedoms (DoFs)

Figure 37a illustrates a multi-degree robotic arm 840 which is able to bend or flex in varying angles in a three-dimensional space, and just in a two-dimensional plane. The multi-degree robotic arm 840 includes a central shaft 842 made from fabric which functions as a restraint member and the central shaft 842 also includes an inner cavity (not shown). The multi-degree robotic arm 840 further includes multiple segments of corrugated air bladders 844 arranged around the central shaft 842. In this way, when selected segments of the corrugated air bladders 844 are inflated, the multi-degree robotic arm 840 is able to bend in different directions in space, and thus, the range of motion is enhanced, as shown in Figure 37b which is a simplified representation of the multi-degree robotic arm 840 of Figure 37a.

Figure 38a illustrates an alternative multi-degree robotic arm 860 called fabric-based soft robotic arm (SRA) that can manipulate objects within a 3-dimensional workspace. The SRA is mainly made from nylon fabrics coated with thermoplastic polyurethane (TPU). The SRA 860 includes a SRA main body 862, joint actuators 864 and gripper 866 which are made separately, combined and attached together, as shown in Figure 38b. The total weight of the robotic arm is about 319g and as shown in Figure 38b, there are four linkages Link A, Link B, Link C and Link D.

Figures 39a and 39b show the fabrication of the SRA 860 which has a one long cylindrical SRA main body 862, and a diameter of 6.6cm. The length of the SRA main body 862 allows the SRA 860 to reach a certain distance to grab an object. To make the specific structure as shown in Figure 37b, a piece of TPU coated nylon fabric 868 of a required dimension is used and masking tape 870 is pasted on the TPU side of the nylon fabric 868 to prevent sealing of unwanted areas, as shown in Figure 39a. The nylon fabric 868 is then folded and sealed similar to the method described in Figures 6 and 7 to form an intermediate structure illustrated in Figure 39b. The SRA is inflated through a short silicone tube 872 at the proximal end. Along the SAR main body 862, there are three segments 874, 876,878 of relatively smaller inflation volumes. These segments 874,876,878 have lower bending stiffness than other portions, so the SRA is arranged to bend easier at these segments 874,876,878. The segments 874,876,878 divide the SRA 860 into four parts: Link A, which is the base of the SRA; link B, which can bend leftwards/rightwards relative to link A; link C, which can bend upward/downward relative to link B; and link D, which is the gripper part.

Four joint actuators 864 are attached at the first two segments 874,876, so that the joint actuators 864 cooperate to bend the SRA 860 in different directions upon inflation. To make the joint actuator 864, a piece of TPU coated nylon fabric 880 of a required dimension is used and masking tape 882 is pasted on the TPU side of the nylon fabric 880 to prevent sealing of unwanted areas, as

shown in Figure 40a. The nylon fabric 880 is then folded and sealed as shown in Figure 40b similar to the method described in Figures 6 and 7 to form a corrugated air bladder structure 884 with folds 886 as illustrated in Figure 40c to form the joint actuator 864. A thin tube is pasted on the inside surface to prevent collapsing of the folds 886. The portions that attached to the SRA main body 862 and specifically to the segments 874,876 are mostly sealed, leaving only a narrow air channel between each fold 886.

Two of the joint actuators 864 are attached to one of the segments 874,876 of the SRA main body 862 by wrapping and sealing a thin piece of fabric on the main body 862. It should be noted that the joint actuators 864 located at the first segment 874 is oriented differently from the joint actuators 864 located at the second segment 876. When the joint actuator 864 is inflated, each fold 886 becomes a small air bladder, and the folds 886 will press on each other to generate a bending moment on the SRA. Therefore, the SRA can bend at the low-stiffness segments 874,876 upon actuating the joint actuators 864. Since the inflation volume of the joint actuator 864 is small, a quick response reaction can be achieved.

The gripper 866 is made in a similar manner as the joint actuator 864, only the size and the masking area is adjusted accordingly. The gripper 866 is attached at the distal end of the arm in Link D. The gripper 866 has two bending points at the folding positions, so the gripper 866 can mimic the motion of a human hand and complete a full grabbing action. When releasing the object, the gripper 866 is deflated, and the pressure in the SRA main body 862 would straighten the gripper 866. The gripper 866is designed to horizontally grab an object, similar to human grabbing motion.

Figures 41a and 41b demonstrate functions of the SRA 860. Figure 41a shows the gripper 866 of the SRA 860 being arranged to grab objects of different sizes and shapes, whereas different motions of the SRA 860 are illustrated in Figure 41b. These demonstrations indicate that this SRA 860 is able to manipulate

simple objects, and may be potentially useful for assisting people in daily lives, e.g. mounting on a wheelchair, or helping to tidy up the table.

In a specific application of the SRA 860, the SRA 860 may be adapted as wearable robotics such as a supernumerary arm or "sixth finger", particularly since the SRA 860 is light. Figure 42 is a simplified diagram of the SRA 860 being worn by a user 888 as a fabric-based supernumerary arm. The SRA 860 may be wrapped around the waist or wrist brace and functions when the SRA 860 is inflated. The actuation system can be packed into a bag carried by the user 888. The additional robotic arm can assist people in working, for example, holding a tool.

In the above examples, a fabric based fluid-driven actuator 100 is used as an example. However, it would be apparent that other than using fabric-based soft actuators for exoskeleton applications, the fluid-driven actuator 100 may be replaced by polymer-based actuators such as that produced by casting/molding (large scale manufacturing) or 3D-printing (small scale prototyping) as described in Figures 12b or 15.

In a further variation, it is envisaged that the robotic glove 650 and the fluid-driven actuators 100 may be fully polymer-based to create an exoskeleton sleeve for assistive, rehabilitation, and prosthetic applications (Polymeric Actuators + Polymeric Glove or other wearable platform).

An exoskeleton sleeve 890 for assistive, rehabilitation, and prosthetic applications may be produced by integrating 3D printed actuators (polymer/TPU based) with a 3D printed wearable platform. The exoskeleton sleeve 890 can aid the fingers, wrist and elbow joints achieve their full range of motion and allow patients to conduct rehabilitation at home or use the exoskeleton sleeve as an assistive device for daily activities or even for prosthetic applications.

The exoskeleton sleeve 890 comprises three modular components – exoskeleton glove 892, exoskeleton wrist brace 894 and exoskeleton elbow

brace 896 to assist range of motions in the three joints - finger, wrist and elbow joints respectively. All three modular components 892,894,896 are 3D printed or casted/molded using TPU, PLA or other polymer based materials.

Figure 43a illustrates a CAD model of a glove interface 898 for the exoskeleton glove 892 and the glove interface 898 functions as a base on which the other parts are attached. The glove interface 898 includes adjustable wrist and hand straps 900,901 that can be easily attached and detached to suit the comfort and fit of the user's hands. As shown in Figures 43b to 43e, the exoskeleton sleeve 890 also includes adaptors 902,904 to secure respective finger actuators 906 to the glove interface 898. The exoskeleton sleeve 890 further includes ring-like finger slot adaptors 908 having a finger slot 910 and an actuator slot 912 for receiving fingertips and for attaching to an extended front 914 of the finger actuator 906 respectively.

Figure 44 is a perspective view of the exoskeleton glove 892 which is fully-polymer based (TPU) with the glove interface 898 which is customizable and the finger actuators. Figure 45 illustrates the exoskeleton glove 892 from the palmar view and it should be appreciated that a user slips his fingertips into each of the finger slots 910 and use the hand strap 901 and the wrist strap 900 and to secure the exoskeleton glove 892 to the hand. Figure 46 illustrates the exoskeleton glove 892 of Figure 45 having one of its finger actuators 906 actuated to produce a bending action upon air pressurization of that actuator 906.

Figure 47a illustrates the exoskeleton elbow brace 896 when worn by a user to aid in elbow bending and extension and Figure 47b illustrates the exoskeleton wrist brace 894 for flexing and extension of a user's wrist as well as radial flexion and ulnar flexion. It should be appreciated that both braces may be 3D printed.

Having now fully described the invention, it should be apparent to one of ordinary skill in the art that many modifications can be made hereto without departing from the scope as claimed.

CLAIMS

1. A fluid-driven actuator comprising

a bending actuator including a first wall portion, a second wall portion cooperating with the first wall portion to define an undulating actuator profile, and an inner fluid bladder disposed between the first and second wall portions and following the undulating actuator profile, and

a restraint member arranged to cooperate with the bending actuator to produce a plurality of motions in response to fluid supplied to the inner fluid bladder.

2. A fluid-driven actuator according claim 1, wherein the restraint member is fixedly coupled to the bending actuator to form a plurality of folds to define the undulating actuator profile.

3. A fluid-driven actuator according to claim 1, wherein the restraint member is detachably coupled to the bending actuator to form a plurality of folds to define the undulating actuator profile.

4. A fluid-driven actuator according to claim 3, wherein each one of the plurality of folds forms a fold width which is adjustable by a user.

5. A fluid-driven actuator according to claim 3 or 4, wherein the bending actuator includes a plurality of flexion locking mechanisms, and the restraint member includes a plurality of restraint locking mechanisms arranged to be selectively attached to respective ones of the plurality of flexion locking mechanisms.

6. A fluid-driven actuator according to any of claims 2 to 5, wherein each one of the plurality of folds is spaced apart from each other.

7. A fluid-driven actuator according to any of claims 2 to 6, wherein the plurality of folds includes segments of folds spaced apart from each segment.

8. A fluid-driven actuator according to claim 7, wherein the number of folds within each segment is different.

9. A fluid-driven actuator according to claim 7, wherein the number of folds within each segment is the same.

10. A fluid-driven actuator according to claim 9, wherein the restraint member is cylindrical and each segment of folds are arranged around the restraint member.

11. A fluid-driven actuator according to any of claims 2 to 10, further comprising a secondary bending actuator having an inner secondary fluid bladder.

12. A fluid-driven actuator according to claim 11 wherein the secondary bending actuator is arranged in opposing relations with the bending actuator with each fold of the secondary bending actuator in registration with respective folds of the bending actuator.

13. A fluid-driven actuator according to claim 12, wherein the secondary bending actuator is arranged above the bending actuator with each fold of the secondary bending actuator in registration with respective folds of the bending actuator.

14. A fluid-driven actuator according to any of claims 11 to 13, wherein the inner secondary fluid bladder and the inner fluid bladder are arranged to be supplied with fluid independently.

15. A fluid-driven actuator according to any of claims 11 to 14, wherein the secondary fluid bladder includes at least two different segments which are arranged to be supplied with fluid independently.

16. A fluid-driven actuator according to any preceding claim, wherein the inner fluid bladder includes at least two different segments which are arranged to be supplied with fluid independently.

17. A fluid-driven actuator according to any preceding claim, further comprising a plurality of the bending actuators, pairs of the bending actuators are arranged in opposing relations at respective segments of the restraint member, wherein the pair of the bending actuators in one segment is oriented differently from the other pair of bending actuators in another segment.

18. A fluid-driven actuator according to claim 17, wherein the plurality of bending actuators further includes a further pair of bending actuators next to each other in a further segment.

19. A fluid-driven actuator according to any preceding claim wherein the restraint member includes a strain limiting layer for causing the bending actuator to flex in response to fluid supplied to the inner fluid bladder.

20. A fluid-driven actuator according to any preceding claim, wherein the restraint member includes an integrally formed inner straightening fluid bladder, the inner straightening fluid bladder arranged to straighten the restraint member longitudinally in response to fluid supplied to the inner straightening fluid bladder.

21. A fluid-driven actuator according to any preceding claim, wherein the fluid-driven actuator is made of TPU coated fabric, one or more layers of polymer, or network of fibres.

22. A fluid-driven actuator according to any preceding claim, wherein the inner fluid bladder is integrally formed with the bending actuator.

23. A fluid-driven actuator according to any preceding claim, further comprising a bellow-type actuator; and the bending actuator is arranged on the bellow-type actuator.

24. An assistive device for rehabilitation or prosthetic applications, comprising at least one fluid-driven actuator according to any preceding claim.

25. A robotic glove comprising at least one fluid-driven actuator according to any of claims 1 to 23.

26. An exoskeleton brace for a limb, comprising at least one fluid-driven actuator according to any of claims 1 to 23.

27. A method of producing a fluid-driven actuator according to any of claims 1 to 23, comprising integrally forming the bending actuator with the inner fluid bladder.

28. A method of producing a fluid-driven actuator according to claim 27, wherein the integrally forming includes forming an elongate actuator having the inner fluid bladder by casting or molding; and folding the elongate actuator to form the bending actuator.

29. A method of producing a fluid-driven actuator according to claim 27, further comprising attaching the bending actuator to the restraint member.

30. A method of producing a fluid-driven actuator according to claim 27, further comprising 3D printing the bending actuator with the inner fluid bladder.

31. A method of producing a fluid-driven actuator according to claim 27, further comprising bonding a TPU-coated fabric to form the inner fluid bladder; and folding the inner fluid bladder to form the bending actuator.

32. A method of producing a fluid-driven actuator according to claim 31, further comprising bonding the bending actuator to the restraint member.

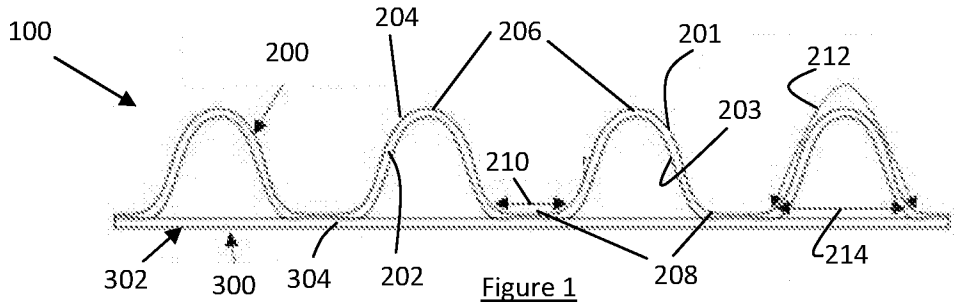

Figure 1

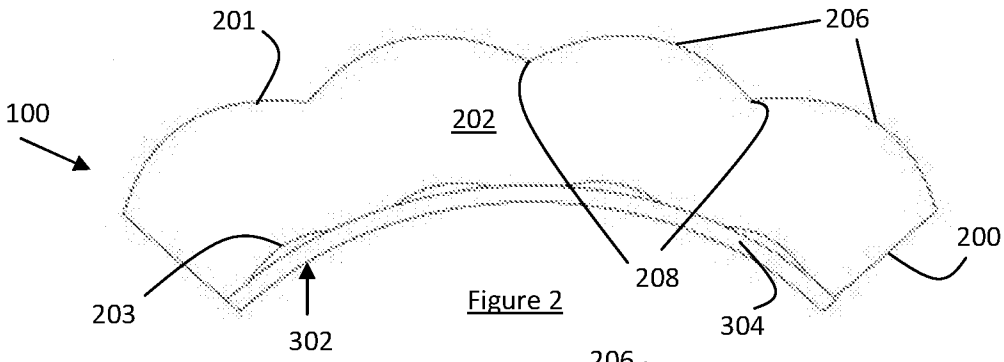

Figure 2

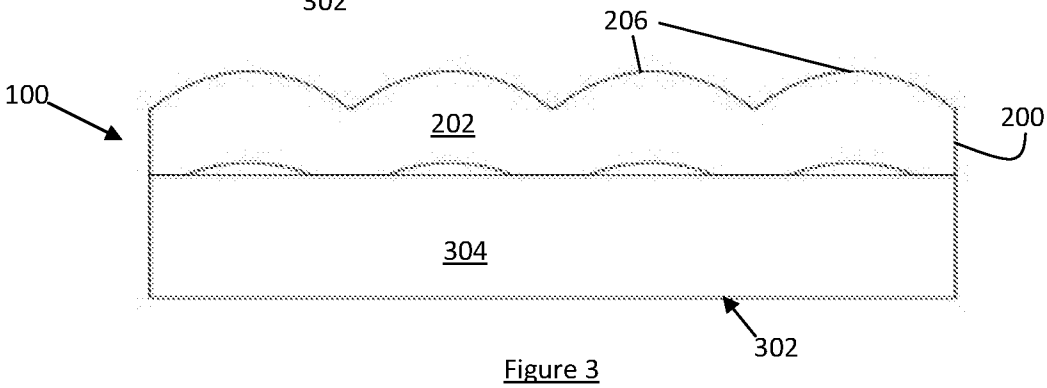

Figure 3

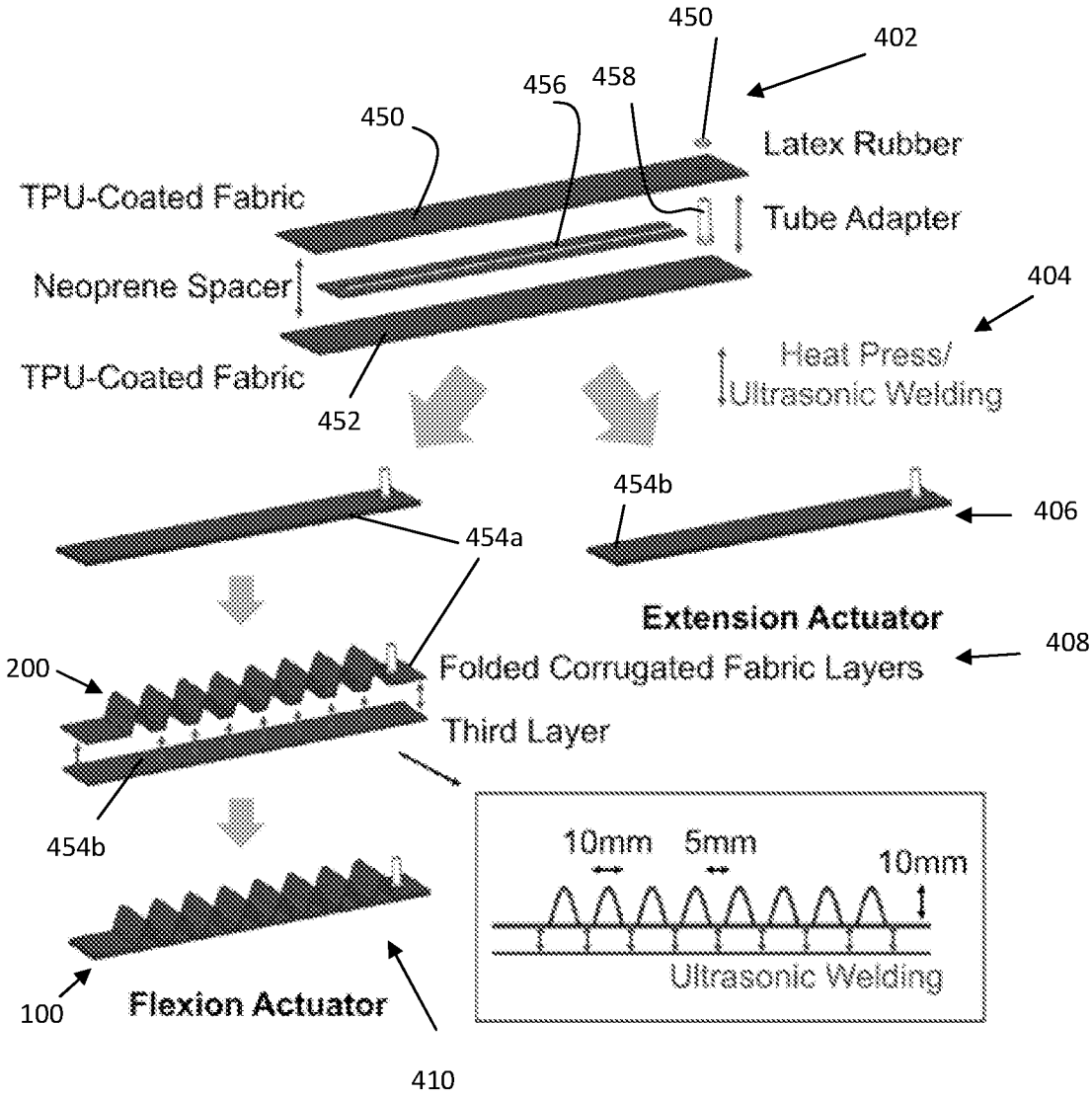
450
402
456
458
450
Latex Rubber
TPU-Coated Fabric
Tube Adapter
Neoprene Spacer
404
Heat Press/
Ultrasonic Welding
TPU-Coated Fabric
452
454b
406
454a
Extension Actuator
200
Folded Corrugated Fabric Layers
408
Third Layer
454b
10mm
5mm
10mm
Ultrasonic Welding
100
Flexion Actuator
410

Figure 4

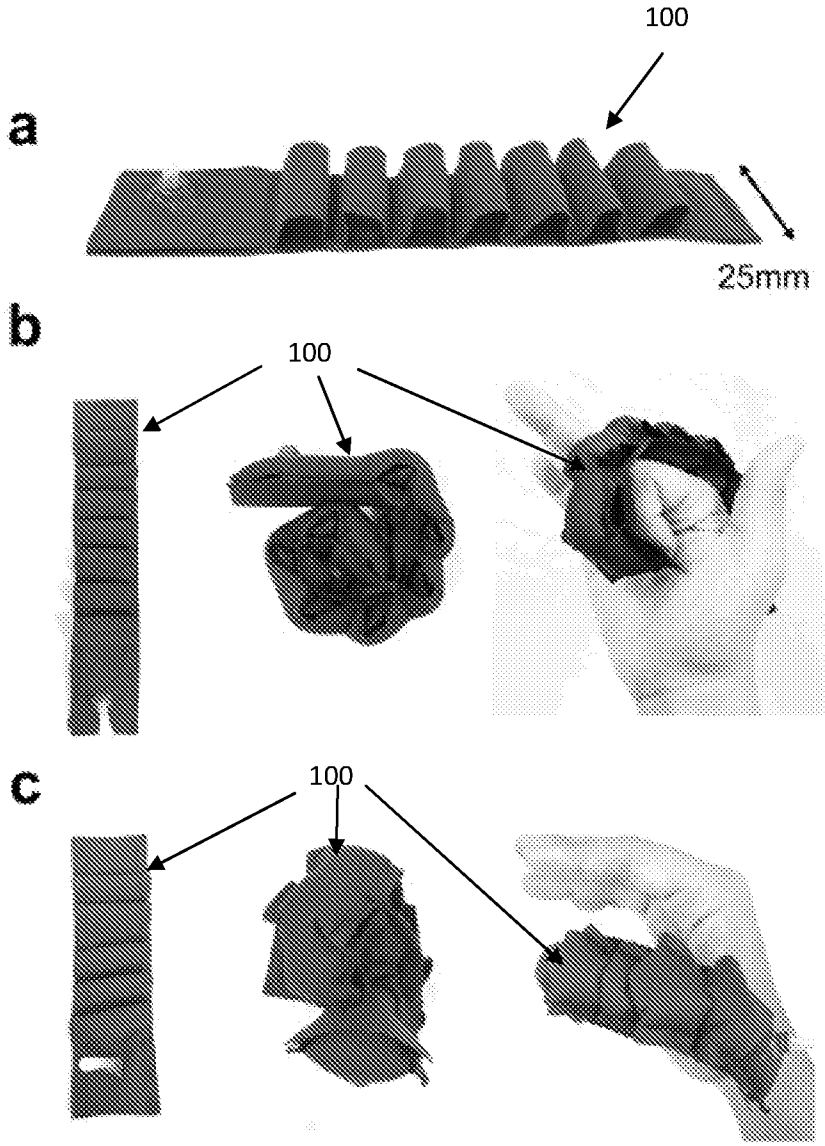

Figure 5

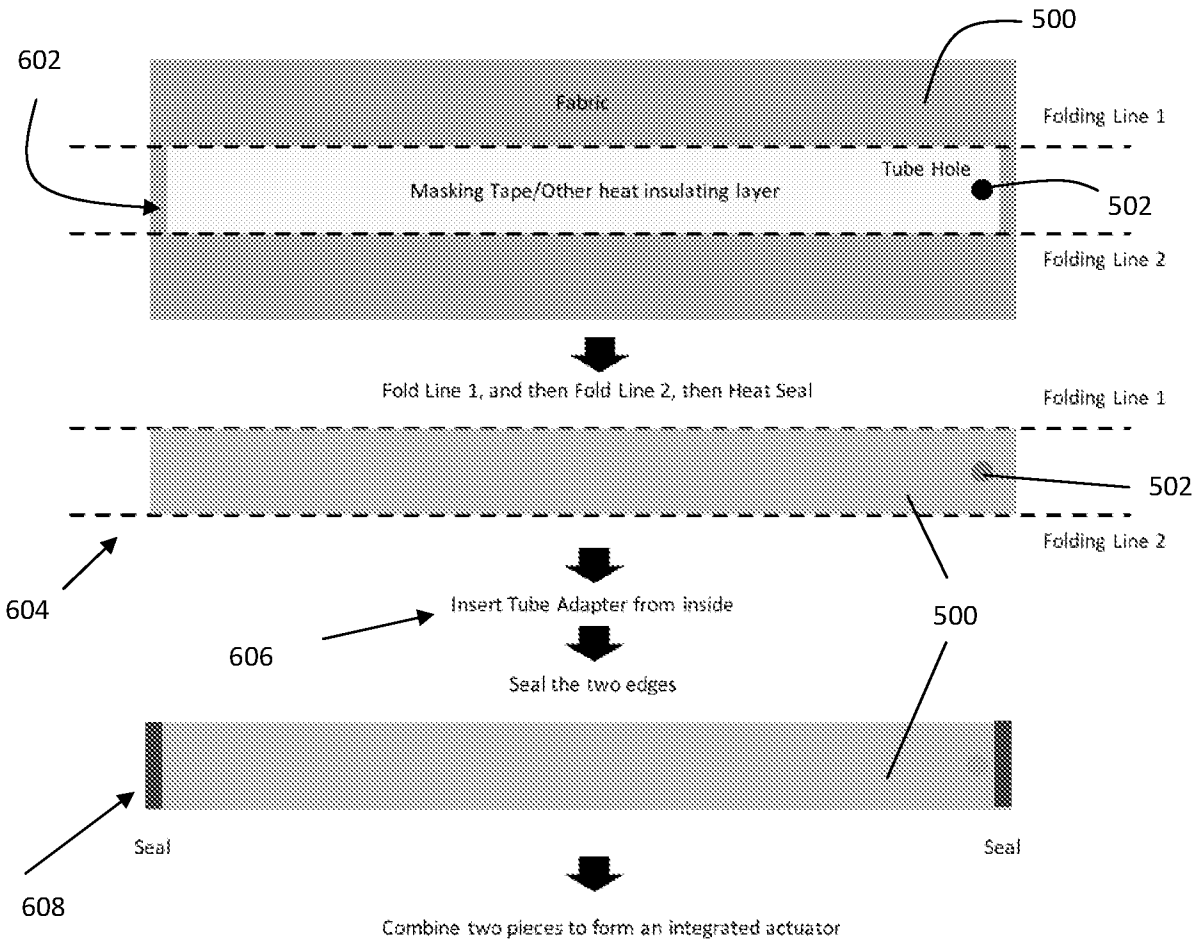
500
602
Fabric
Folding Line 1
Tube Hole
Masking Tape/Other heat insulating layer
502
Folding Line 2
Fold Line 1, and then Fold Line 2, then Heat Seal
Folding Line 1
502
Folding Line 2
604
Insert Tube Adapter from inside
500
606
Seal the two edges
Seal
Seal
608
Combine two pieces to form an integrated actuator

Figure 6a

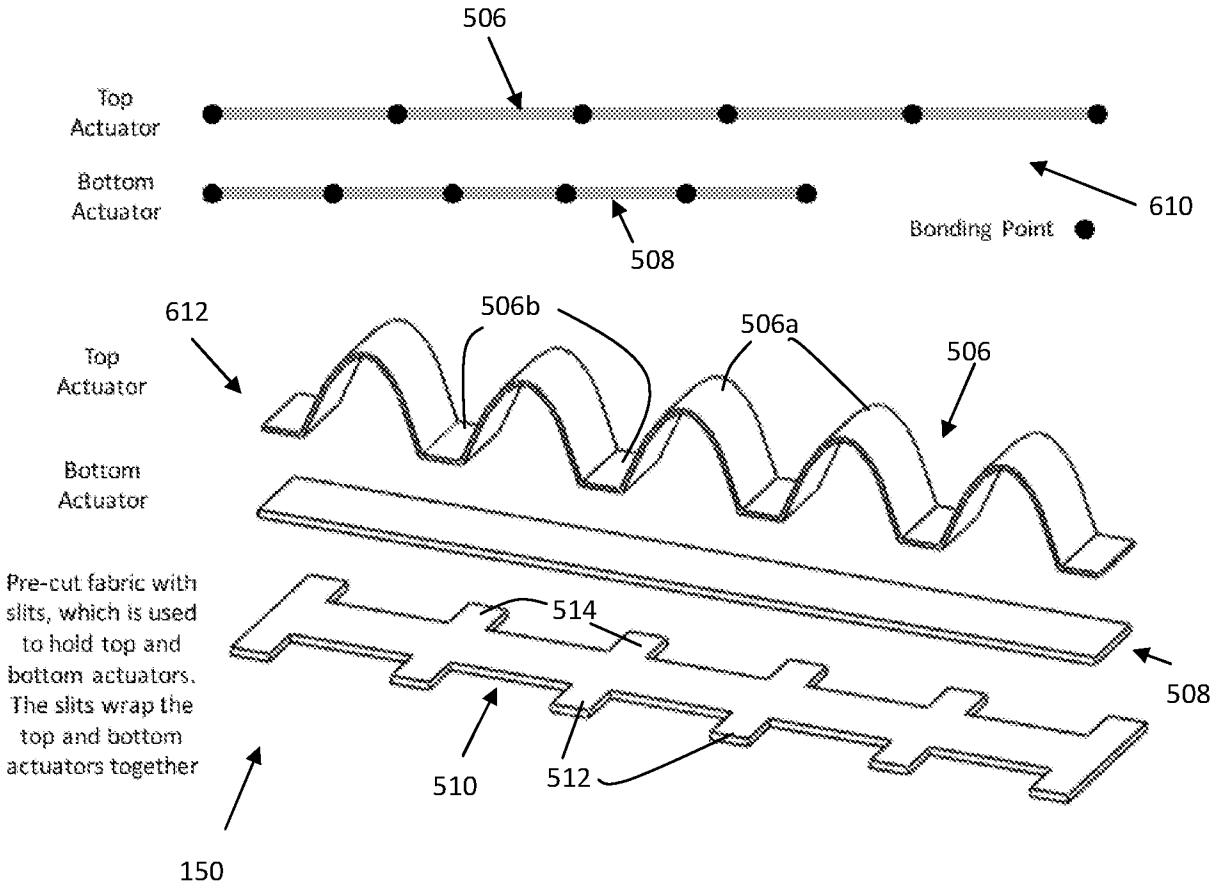

Figure 6b

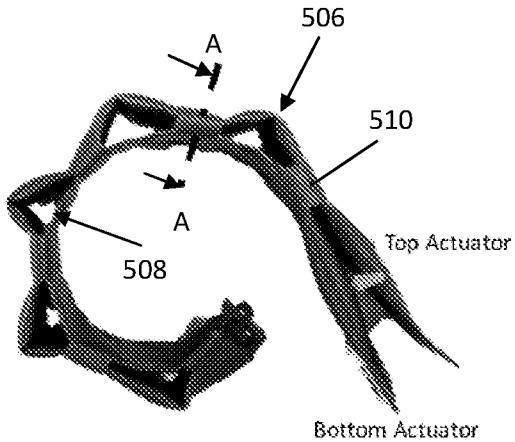

Figure 6c

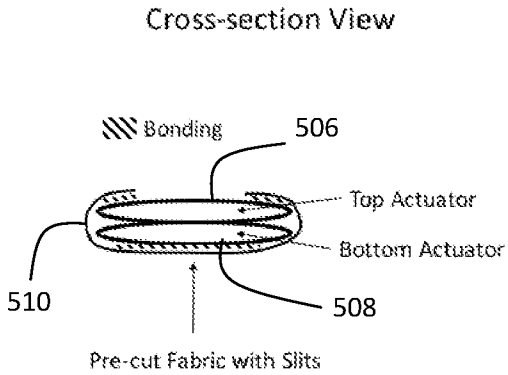

Figure 6d

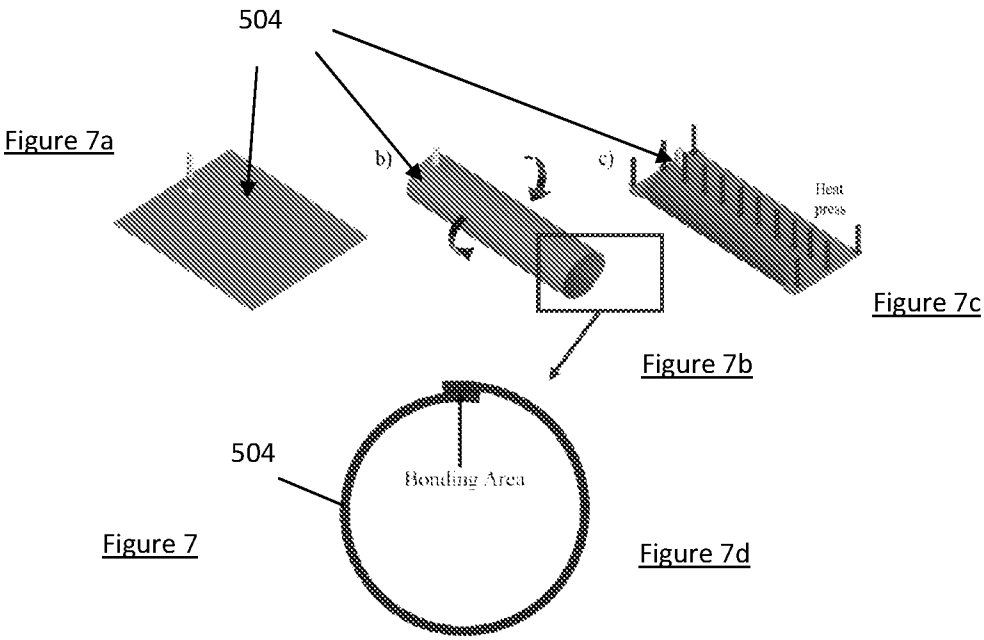

Figure 7a

Figure 7b

Figure 7c

Figure 7

Figure 7d

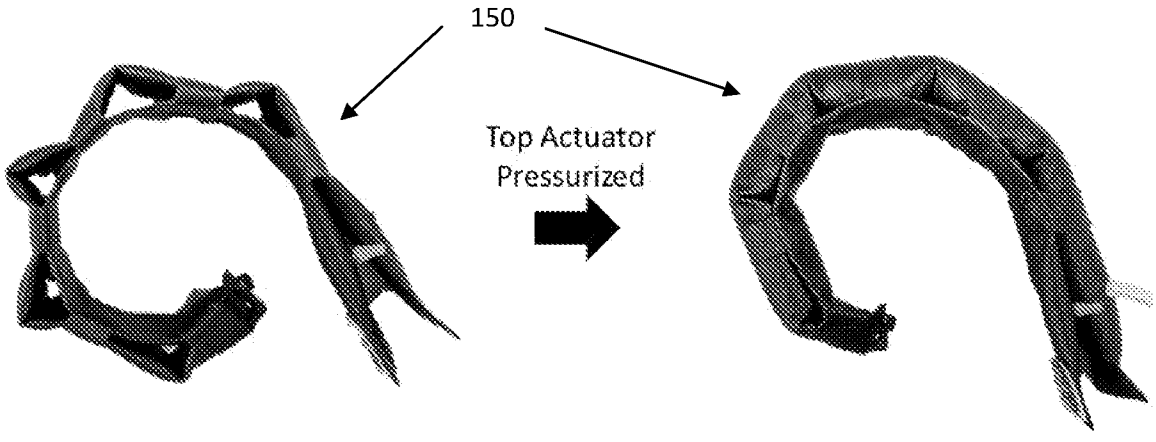

Figure 8a

Figure 8b

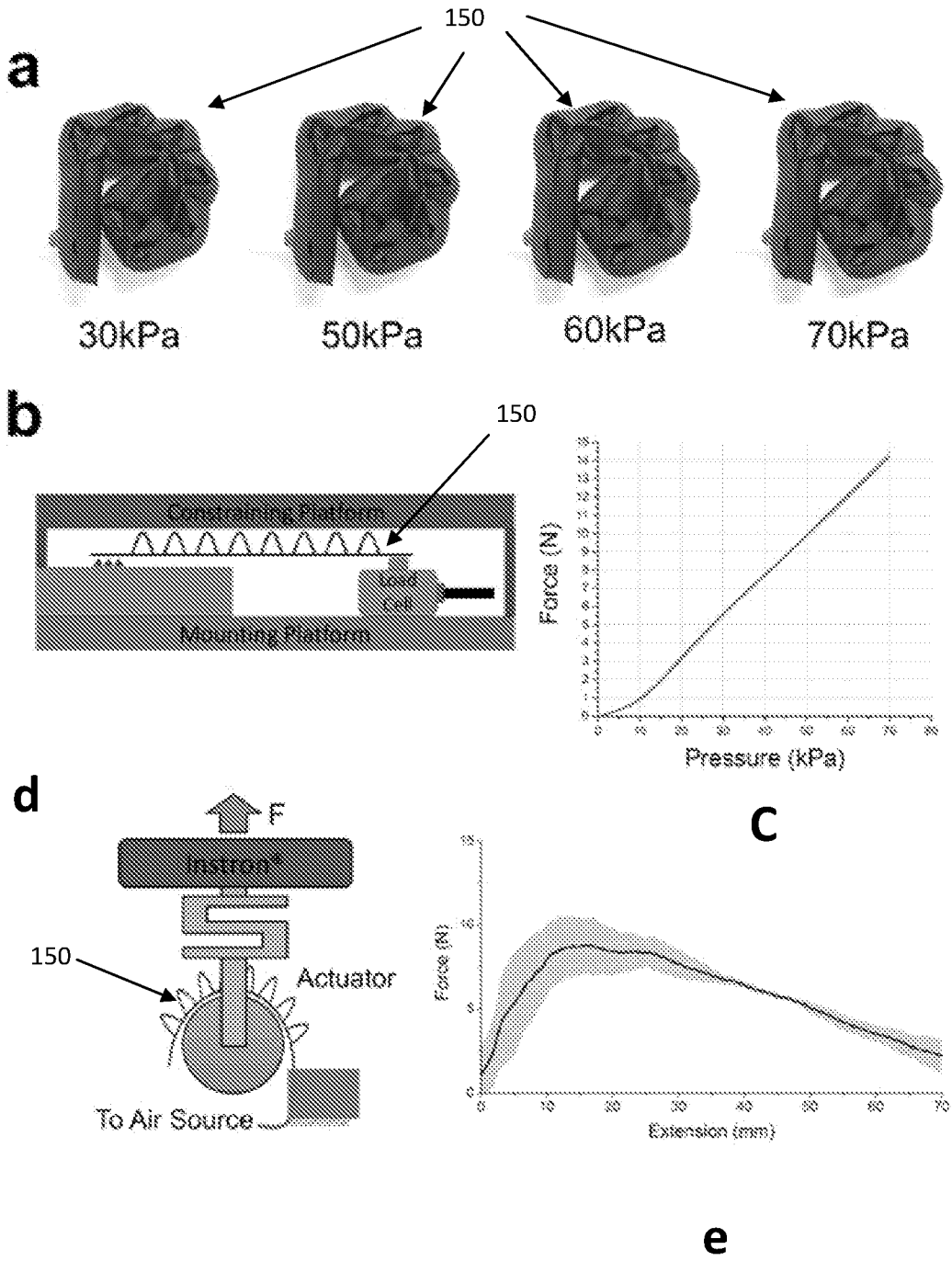
a
150
30kPa
50kPa
60kPa
70kPa
b
150
Constraining Platform
Mounting Platform
c
Force (N)
Pressure (kPa)
d
F
Instron®
150
Actuator
To Air Source
e
Force (N)
Extension (mm)

Figure 9

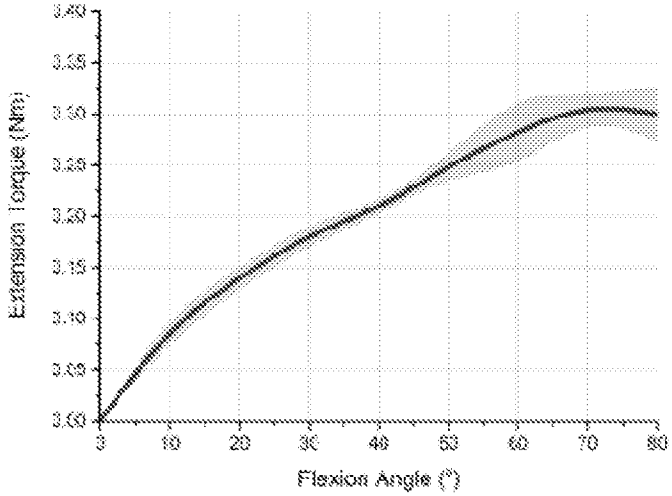
Extension Torque (Nm)
3.60
3.55
3.50
3.45
3.40
3.35
3.30
3.25
3.20
0
10
20
30
40
50
60
70
80
Flexion Angle (°)

Figure 10

Figure 11a

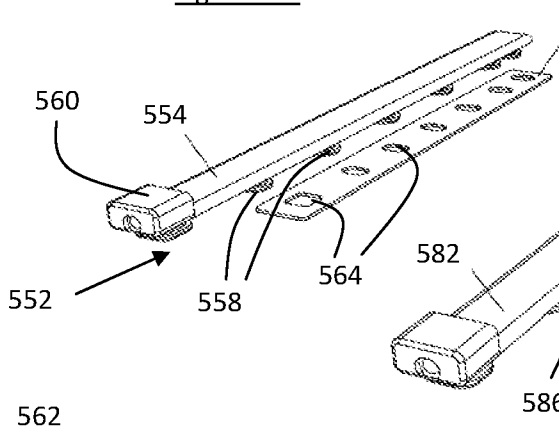

Figure 11b

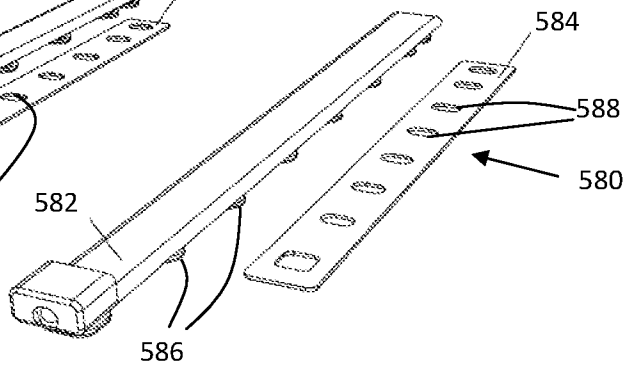

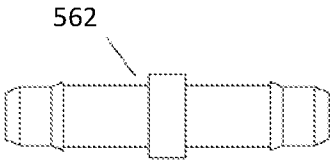

Figure 11c

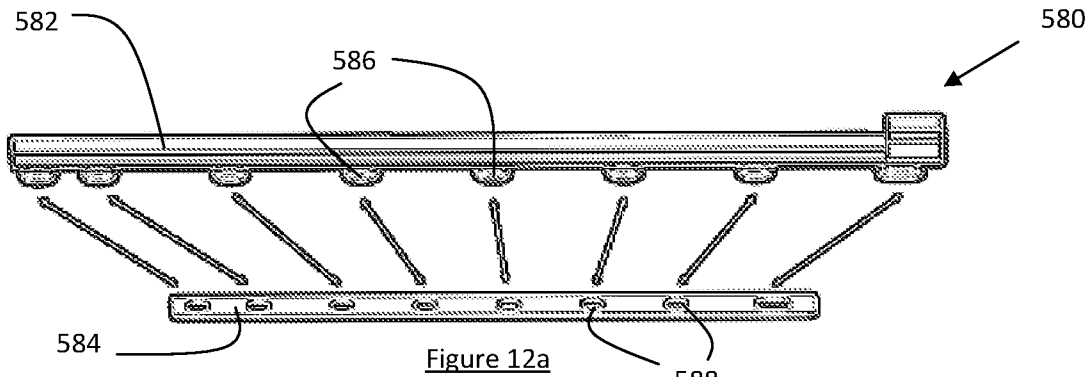

Figure 12a

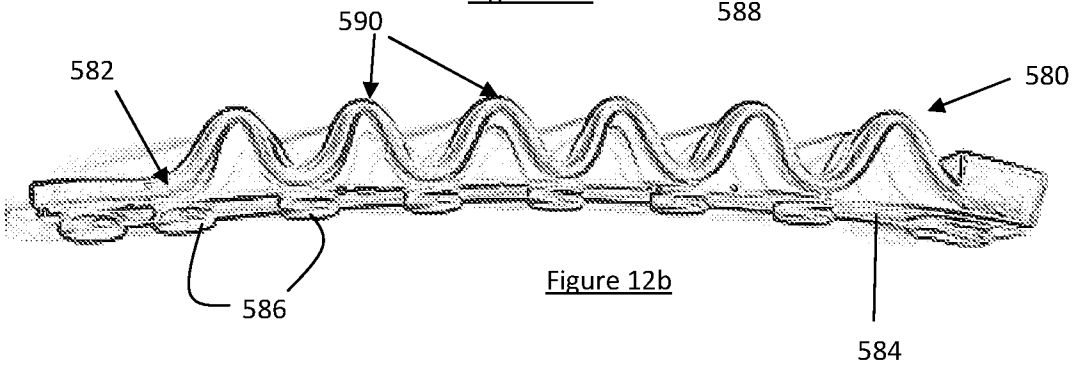

Figure 12b

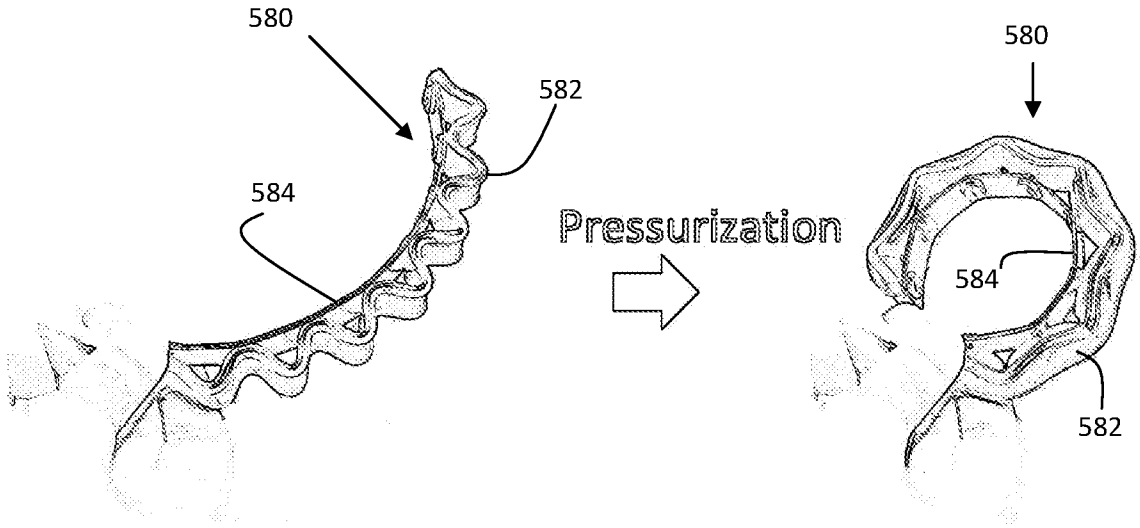

Figure 13a

Figure 13b

Figure 14: The settings used on the Simplify3D software that were important to a successful 3D printed actuator are as follows:

Extruder	Extrusion Multiplier	1.20
	Coasting at End	2.0 mm
Layer	Primary Layer Height	0.1mm
	Outline/Perimeter Shells	2
	Outline direction	Inside-Out
	First Layer Height	50%
	First Layer Width	120%
	First Layer Speed	60%
Infill	Fill Pattern	Rectilinear
	Interior Fill Percentage	100%
	Outline Overlap	20%
	Infill Extrusion Width	100%
	Minimum Infill Length	0.05mm
Temperature	Temperature	230 °C
Cooling	Fan Speed	0
Others	Default Printing Speed	32.0 mm/s
	Extruder Movement Speed	200 mm/s
Advanced	Avoid in crossing outline for travel movements option	Checked

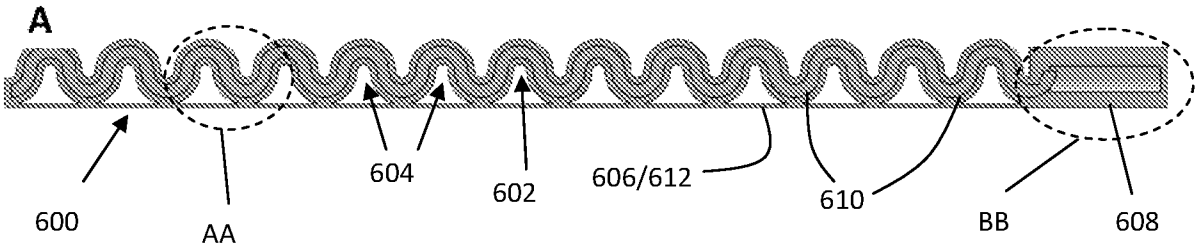

Figure 15

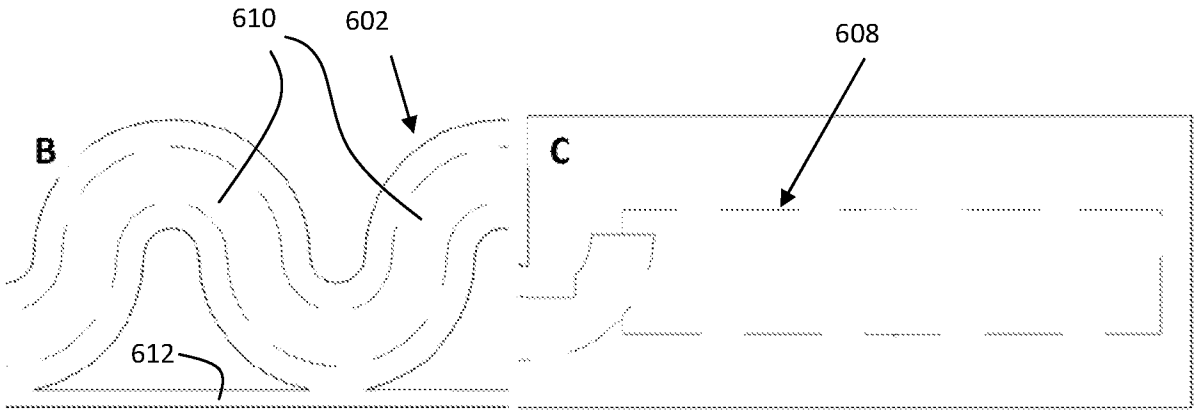

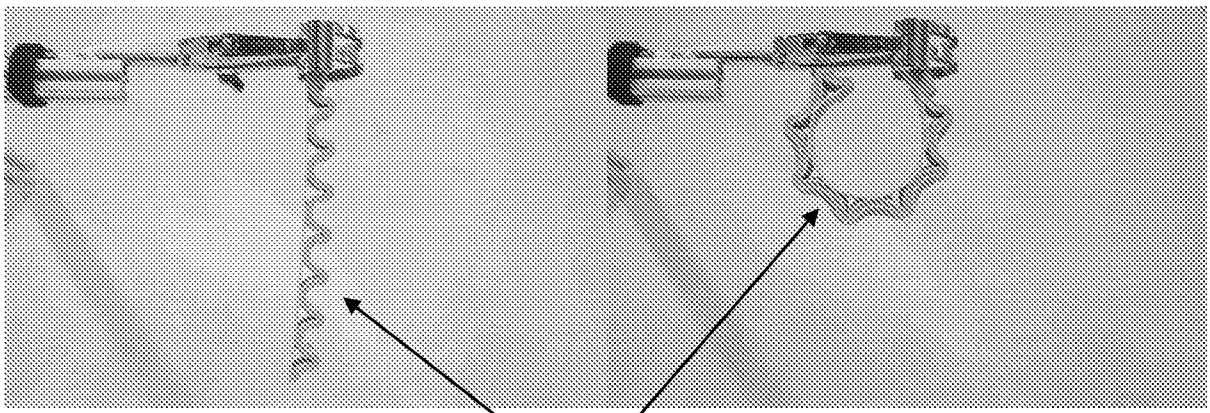

Figure 16a

Figure 16b

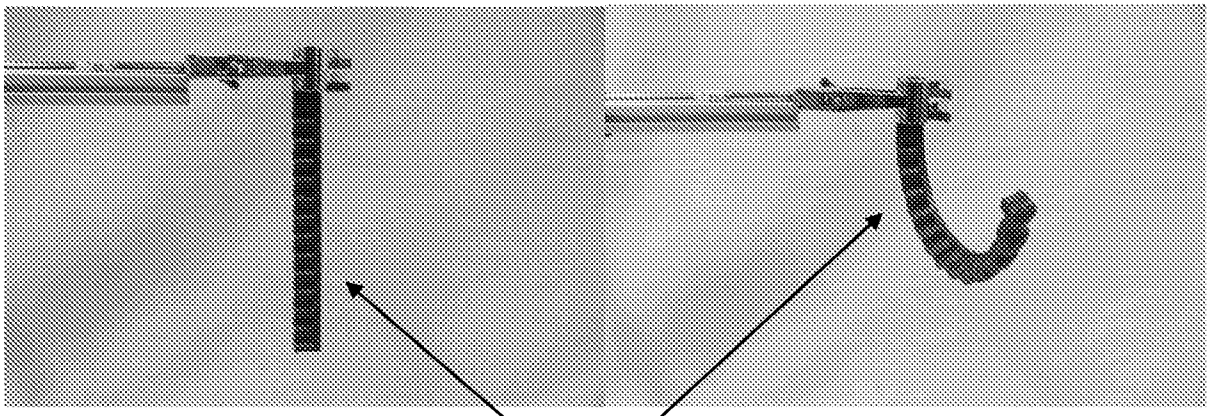

Figure 17a Figure 17b

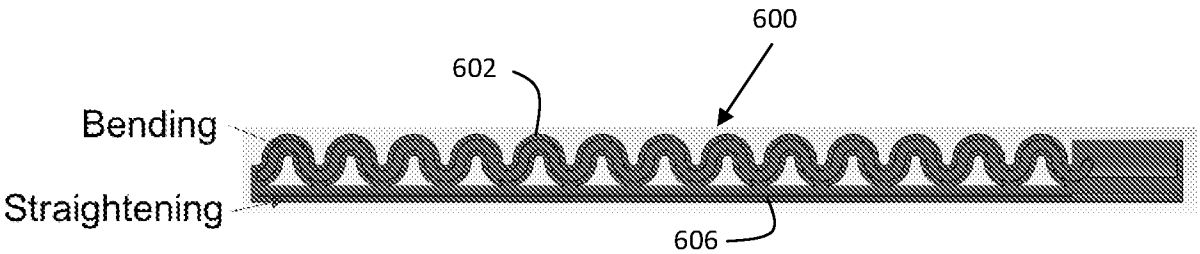

Figure 18

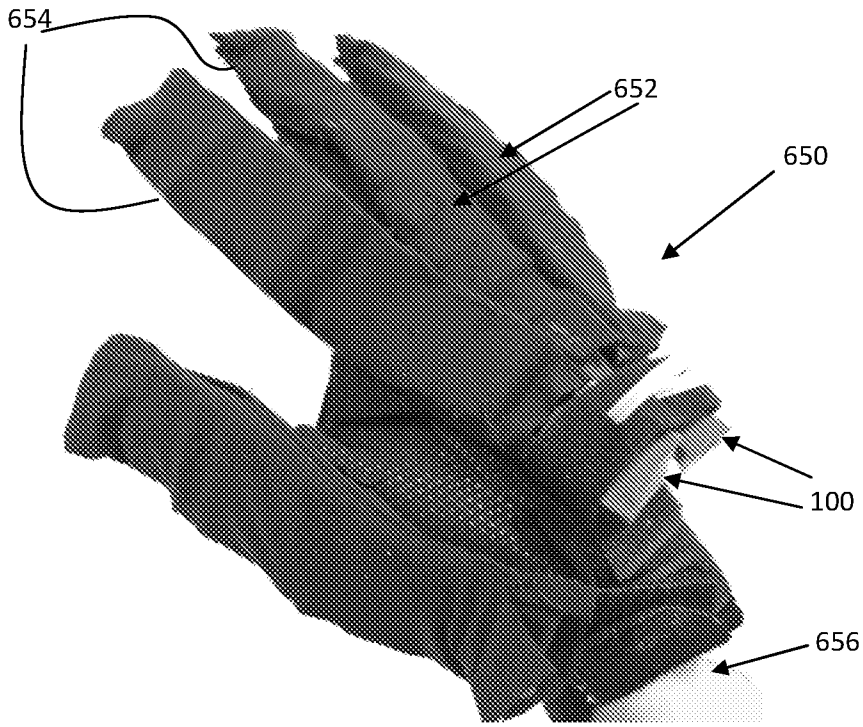

Figure 19

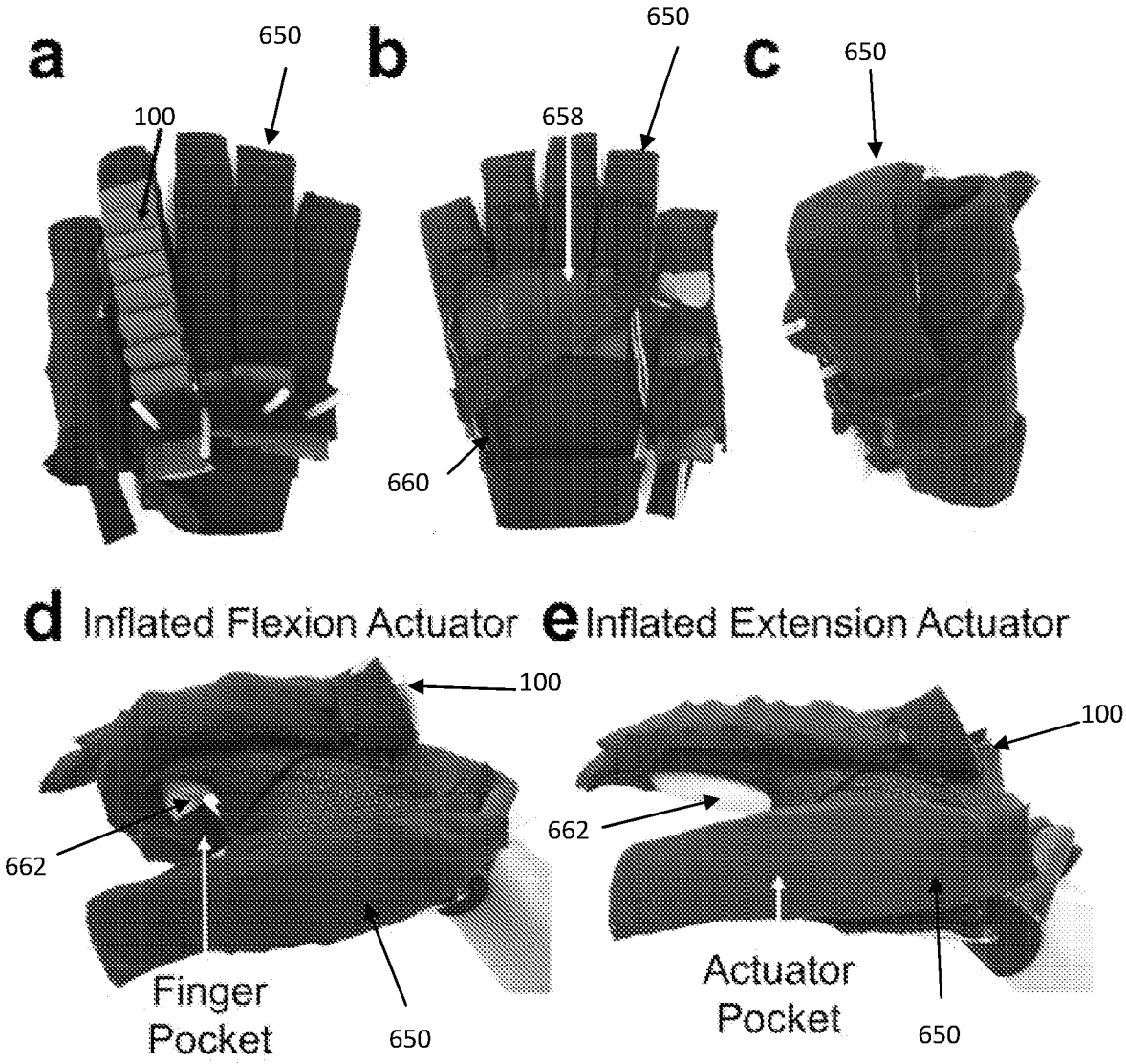
a
650
100
b
650
658
660
c
650
d Inflated Flexion Actuator
e Inflated Extension Actuator
100
662
Finger
Pocket
650
100
662
Actuator
Pocket
650

Figure 20

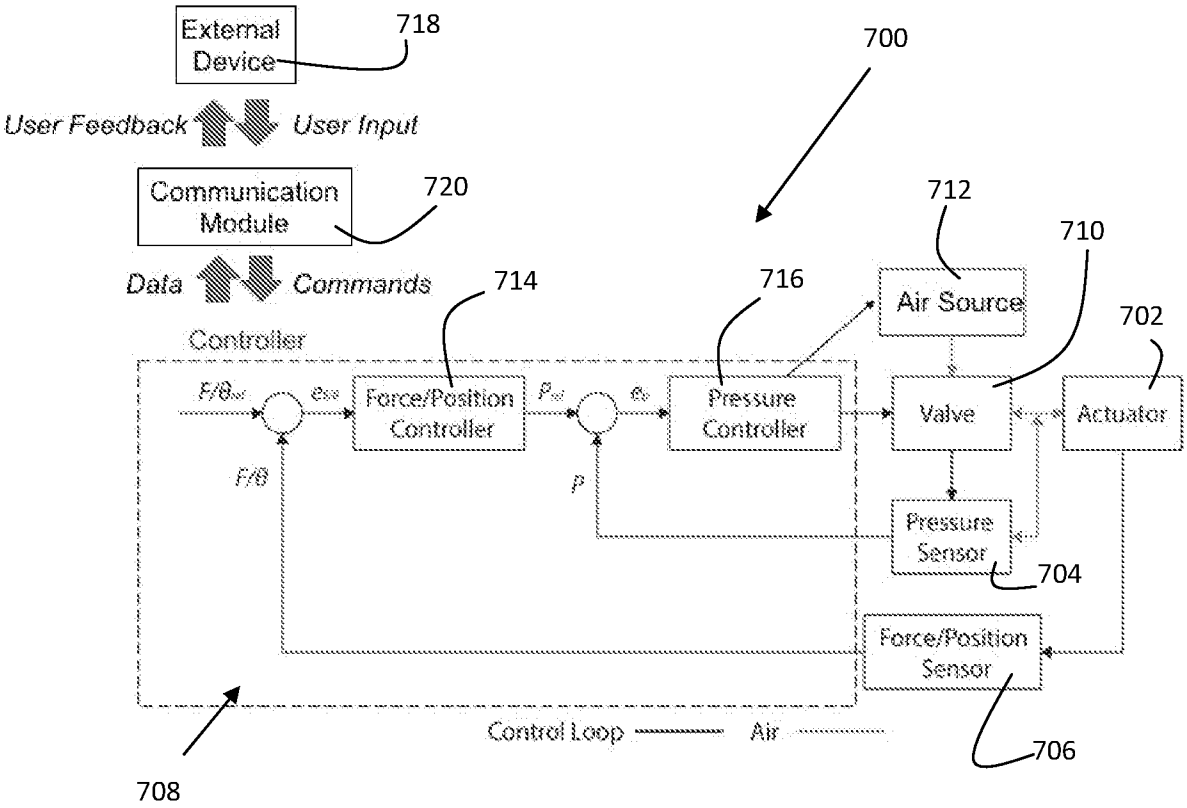
External Device
718
700
User Feedback
User Input
Communication Module
720
712
710
Data
Commands
714
716
Air Source
Controller
702
Force/Position Controller
Pressure Controller
Valve
Actuator
F/θ
P
Pressure Sensor
704
Force/Position Sensor
Control Loop
Air
706
708

Figure 21

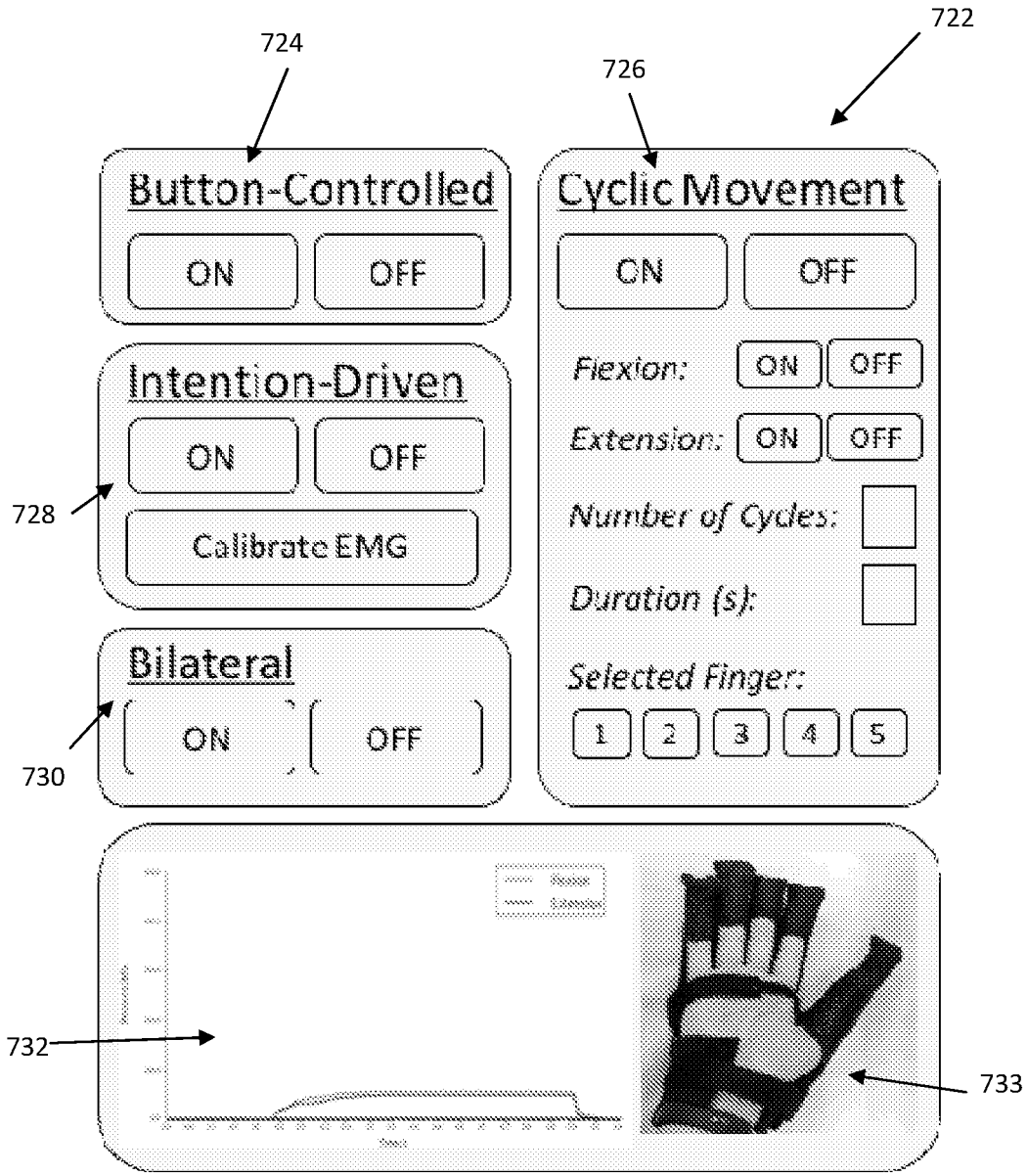
722
724
726
Button-Controlled
ON
OFF
Intention-Driven
ON
OFF
Calibrate EMG
728
Bilateral
ON
OFF
730
Cyclic Movement
ON
OFF
Flexion:
ON
OFF
Extension:
ON
OFF
Number of Cycles:
Duration (s):
Selected Finger:
1
2
3
4
5
732
733

Figure 22

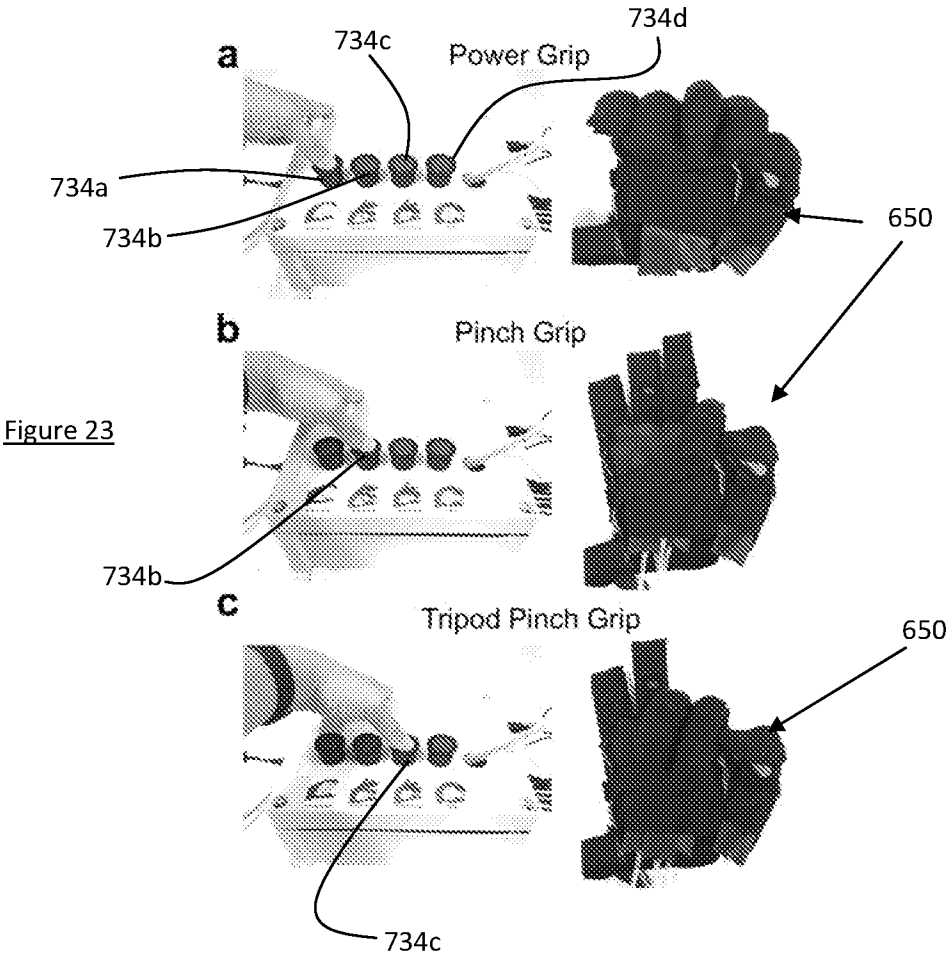
a
734c
Power Grip
734d
734a
734b
650
b
Pinch Grip
734b
c
Tripod Pinch Grip
650
734c

Figure 23

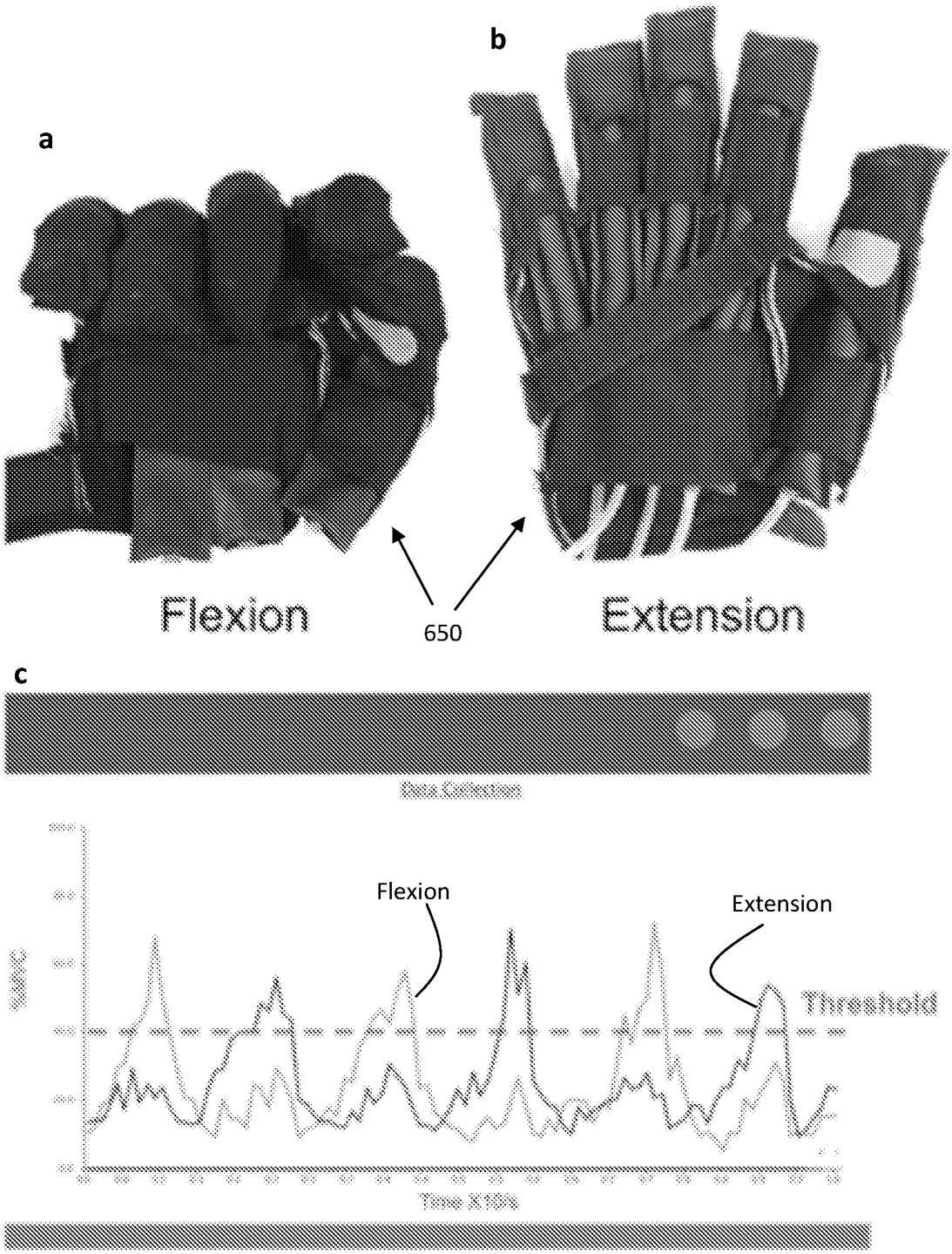
a
b
Flexion
650
Extension
c
Flexion
Extension
Threshold
Time X10s

Figure 24

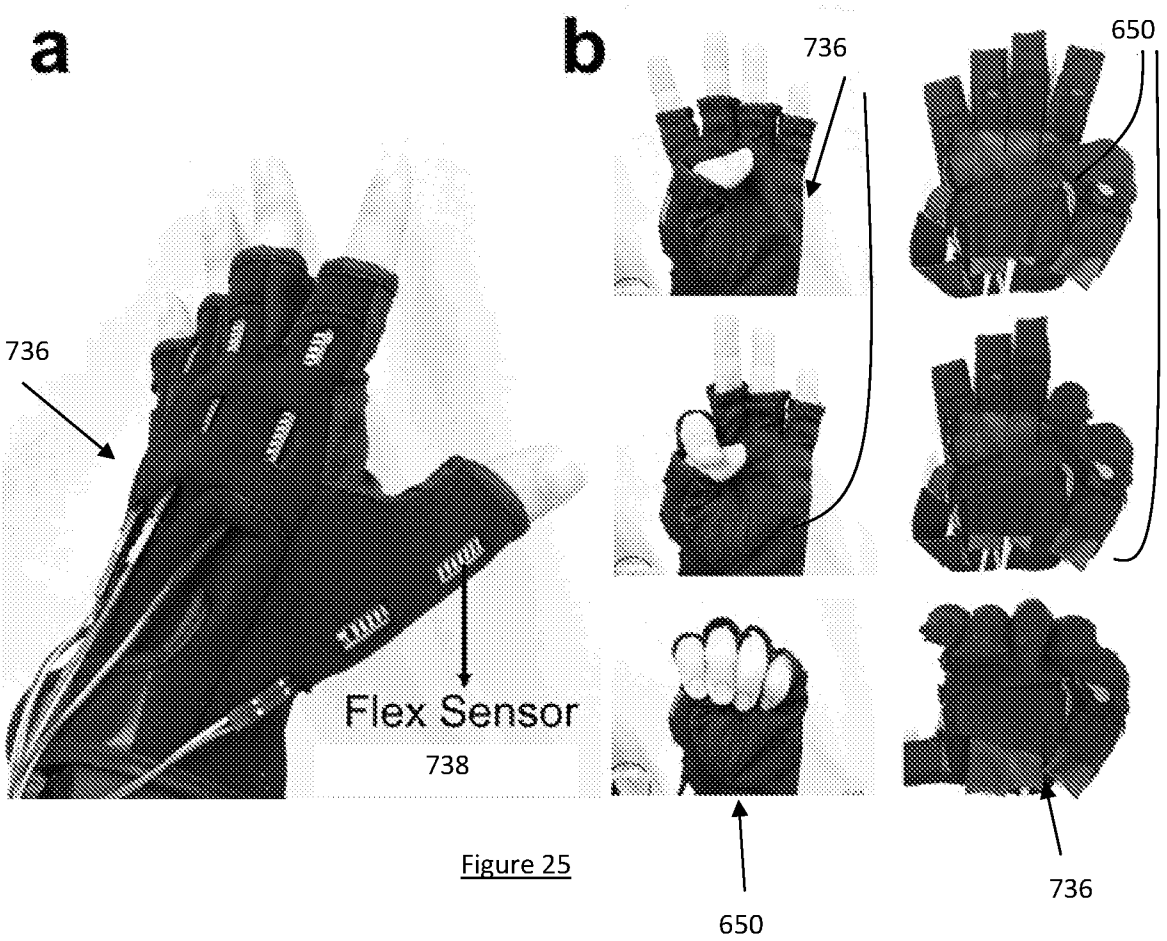

Figure 25

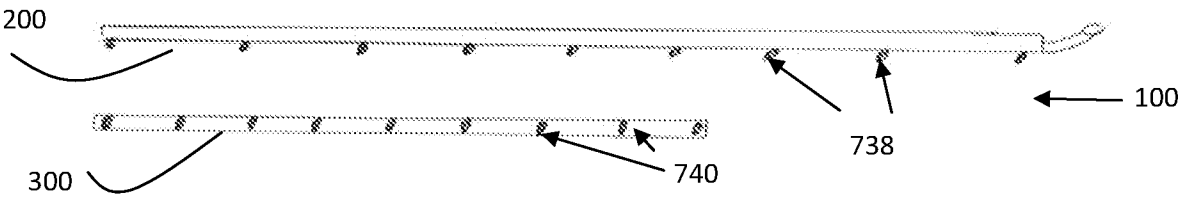

Figure 26

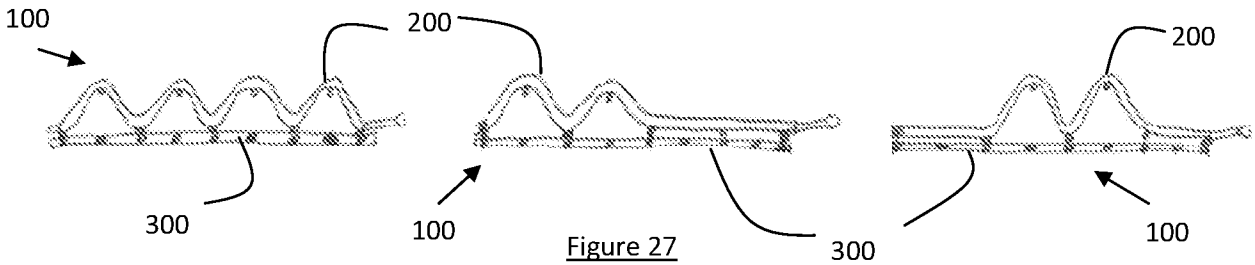

Figure 27

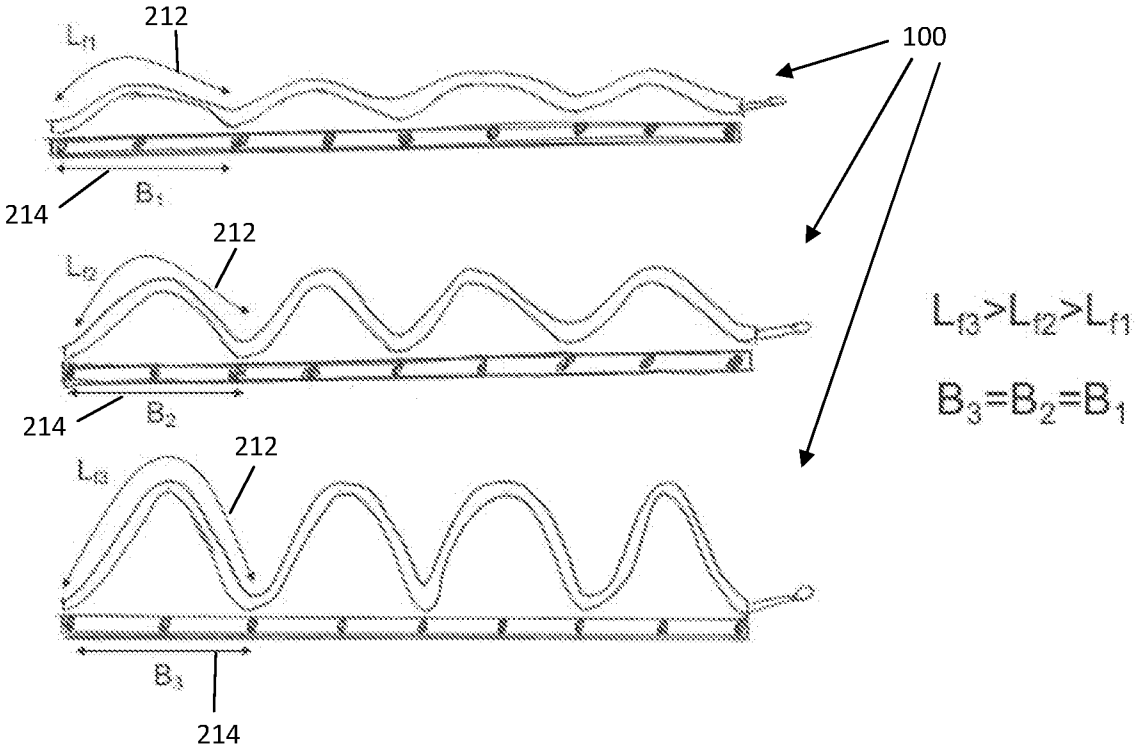
212
L_{f1}
100
214
B_1
212
L_{f2}
$L_{f3}>L_{f2}>L_{f1}$
214
B_2
$B_3=B_2=B_1$
212
L_{f3}
B_3
214

Figure 28

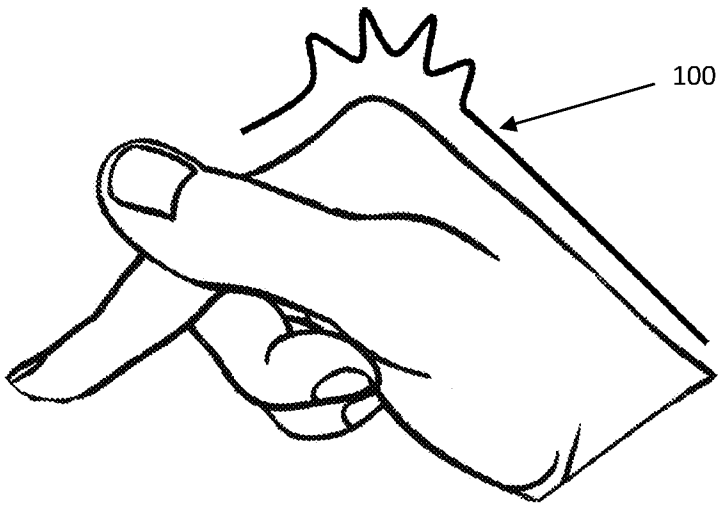

Figure 29a

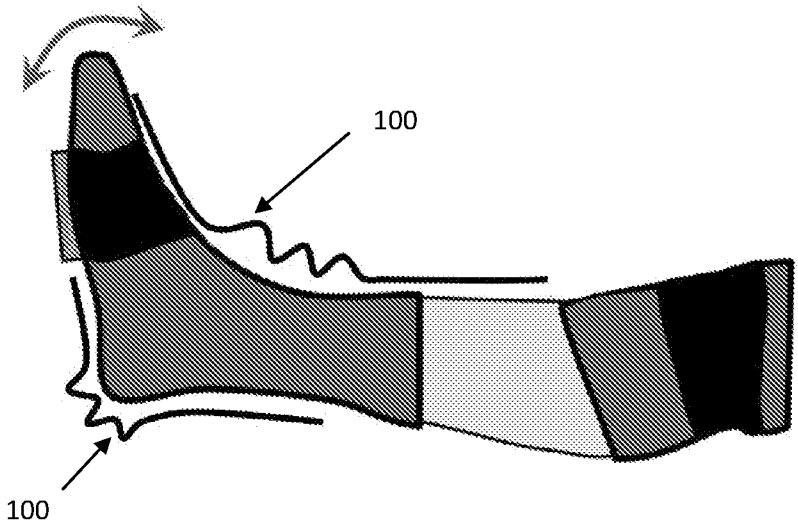

Figure 29b

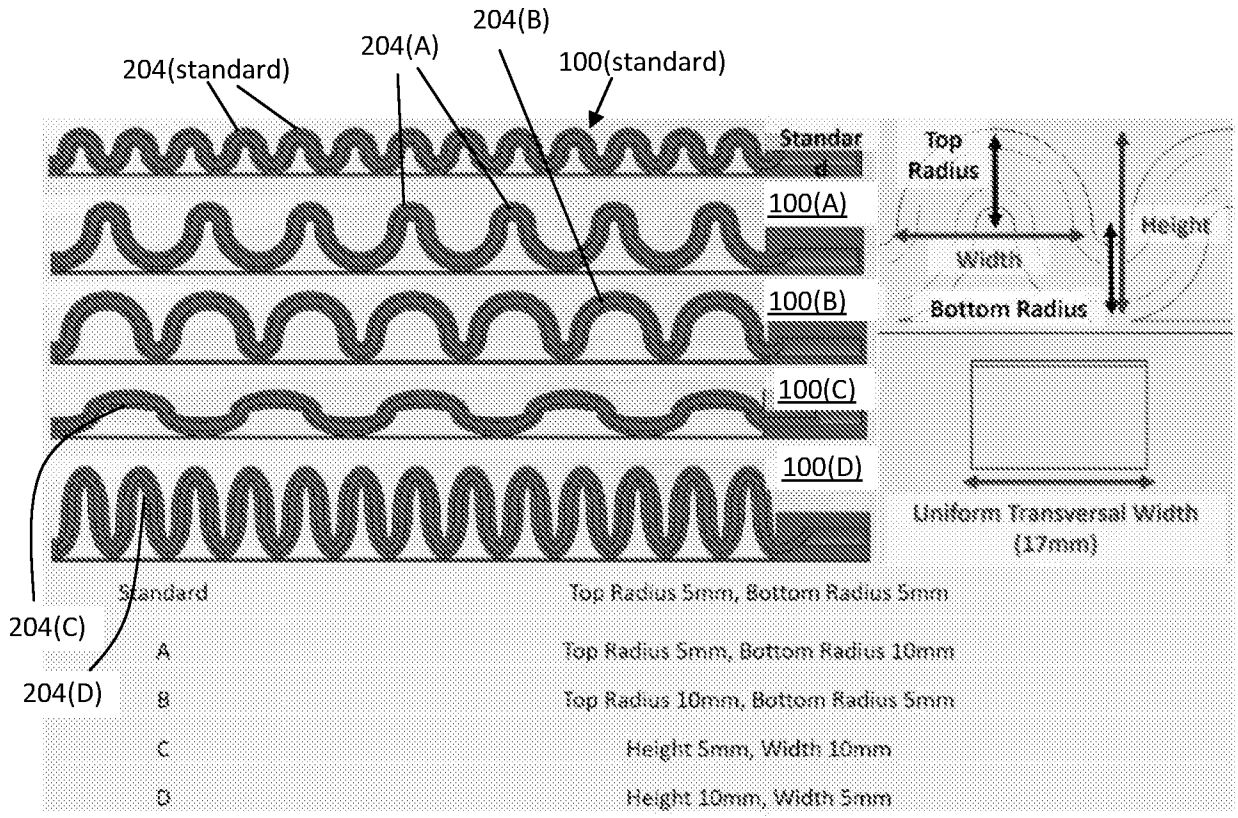

Figure 30

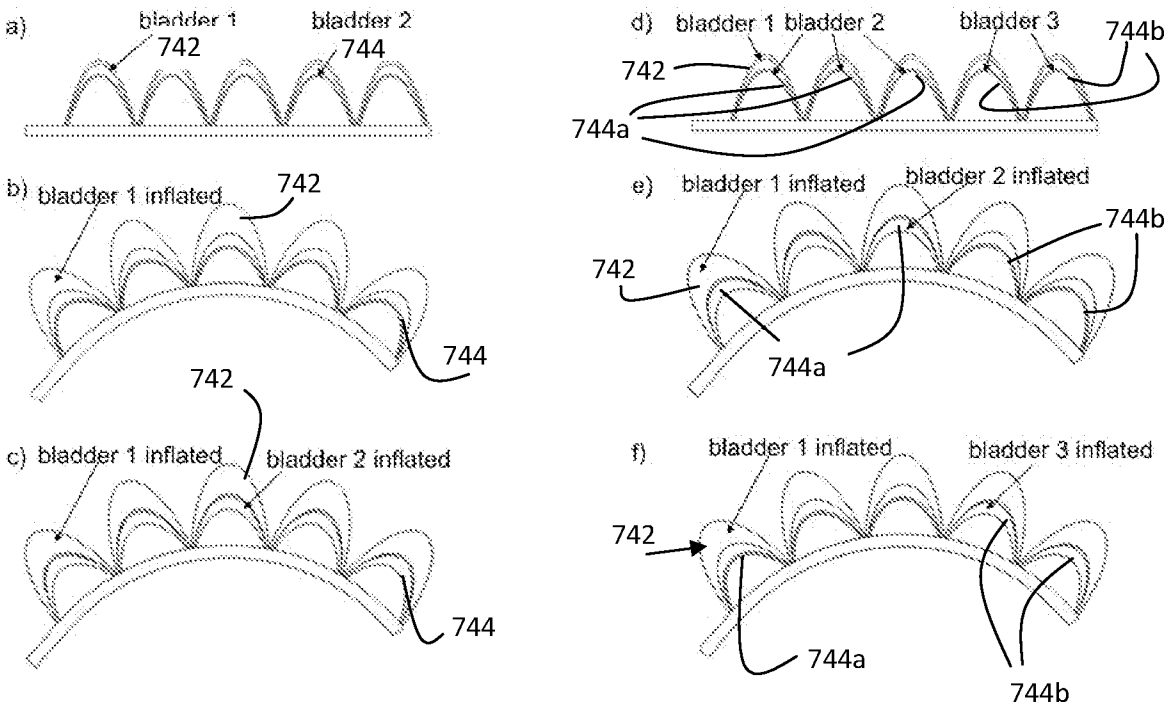

Figure 31

Enhanced Uniform Bending & Force

Figure 32a

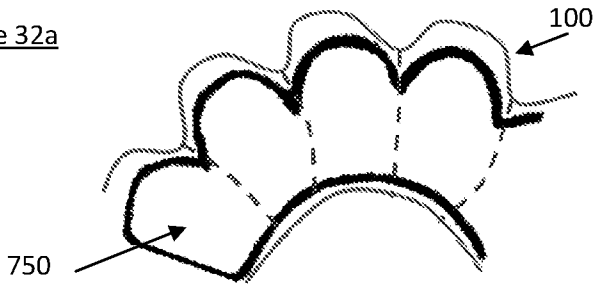

Enhanced Distal Bending & Force

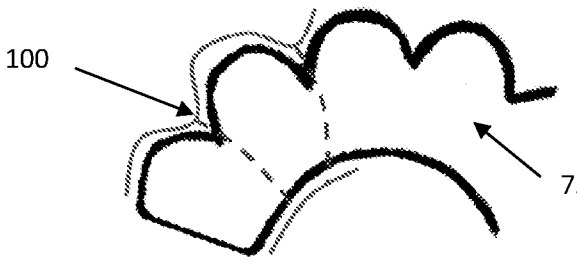

Figure 32b

Enhanced Central Bending & Force

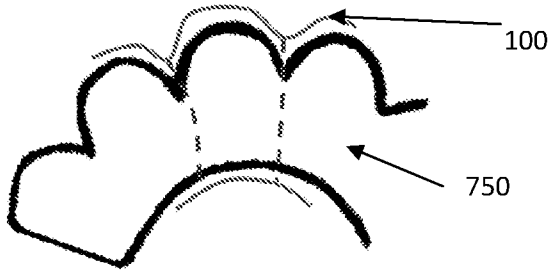

Figure 32c



Figure 33a

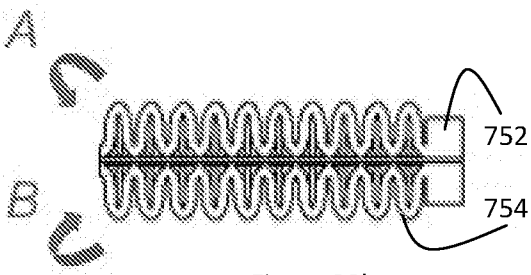

Figure 33b

Front View

Bottom View

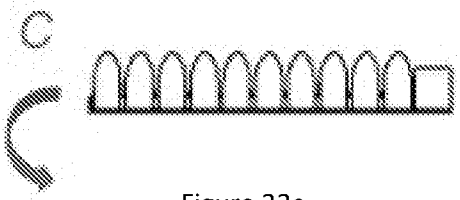

Figure 33c

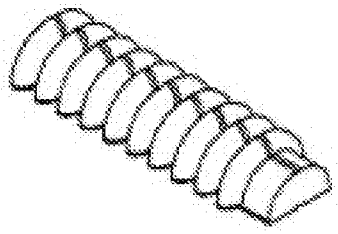

Figure 33d

Side View

Isometric View

Multi-directional Bending

Inflate A → Bend in A direction

Inflate B → Bend in B direction

Inflate A&B → Bend in C direction

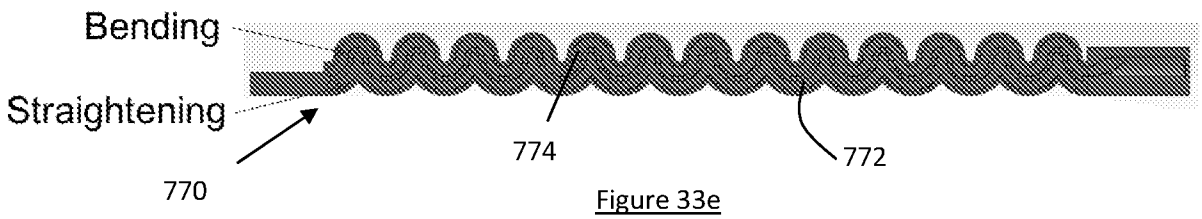

Figure 33e

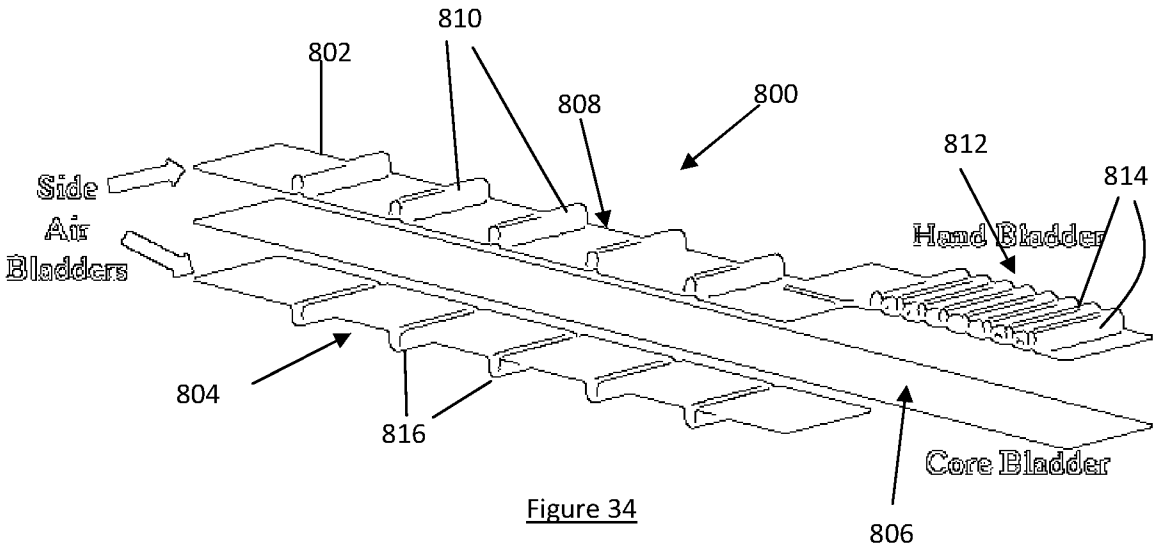

Figure 34

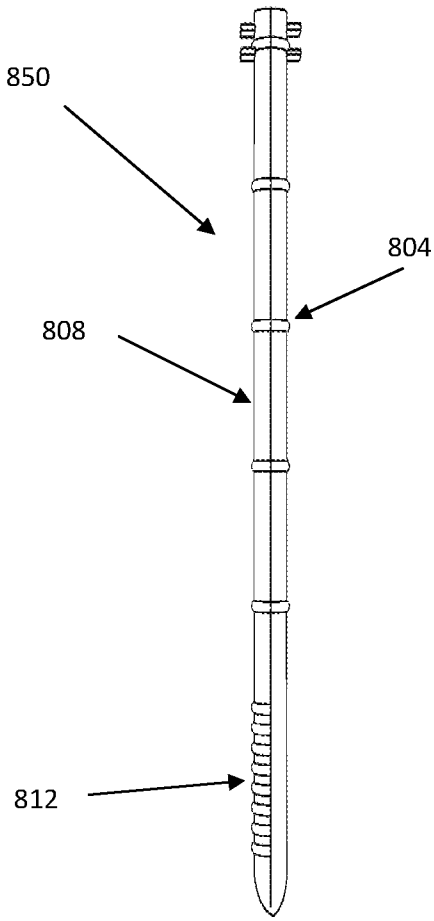

Figure 35

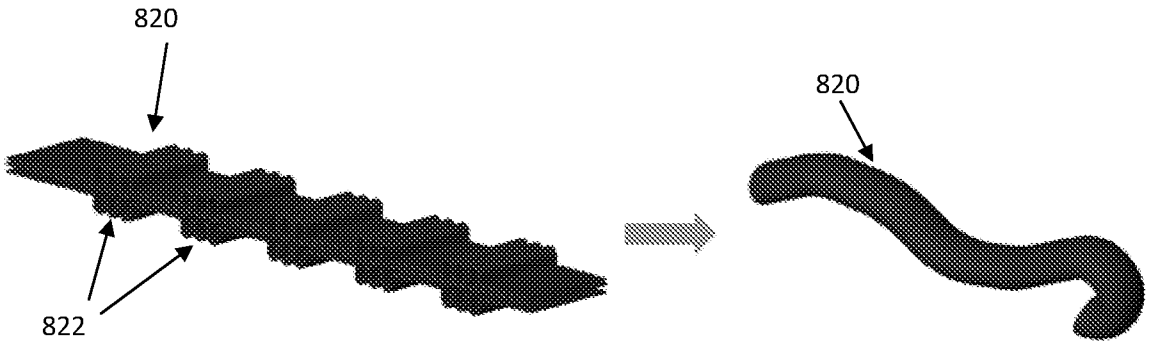

Figure 36a

Figure 36b

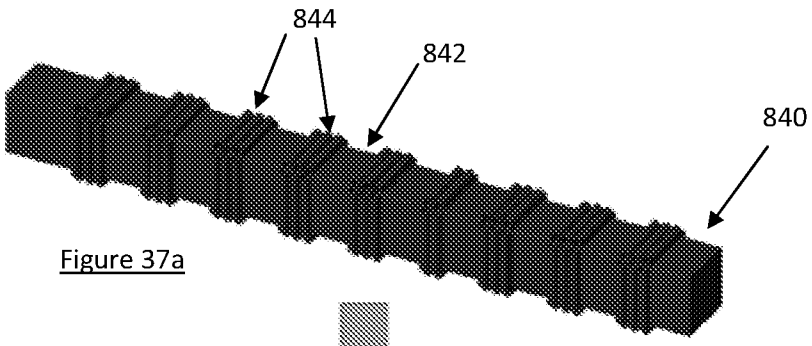

Figure 37a

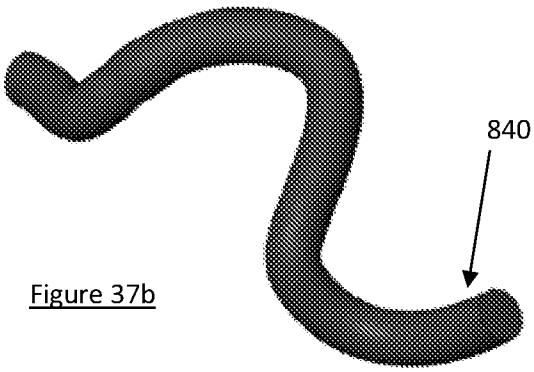

Figure 37b

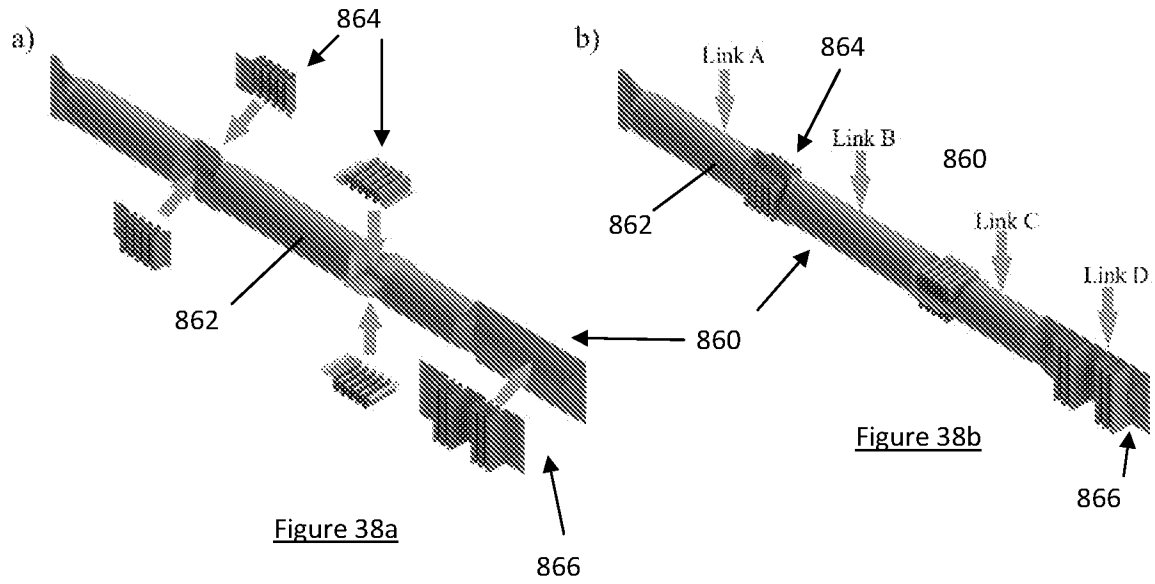

Figure 38a

Figure 38b

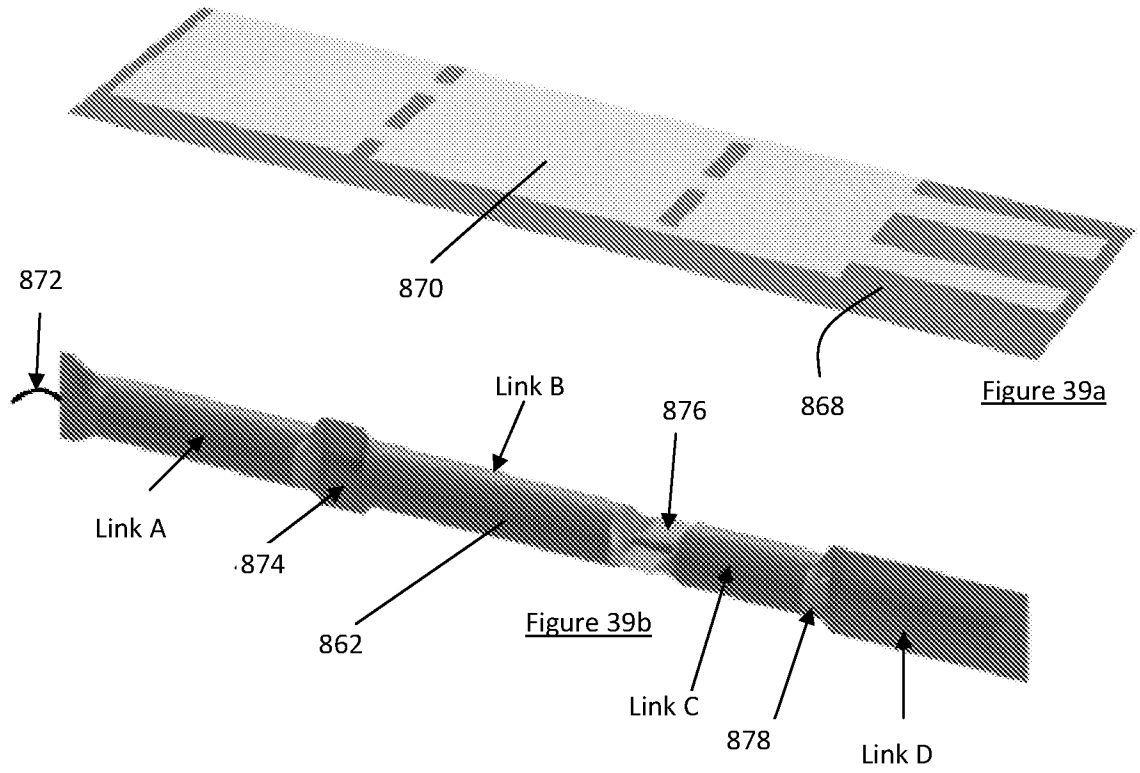

Figure 39a

Figure 39b

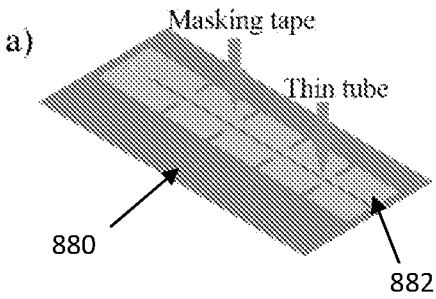

Figure 40a

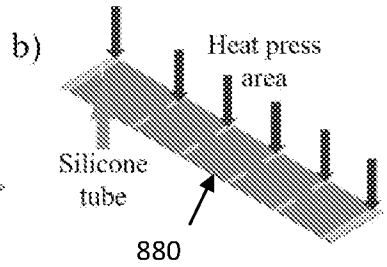

Figure 40b

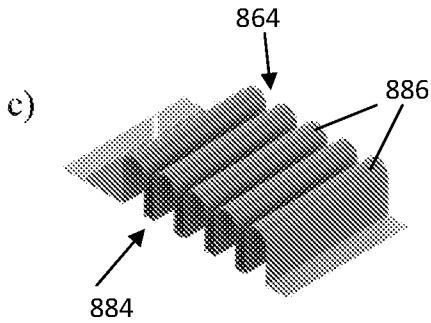

Figure 40c

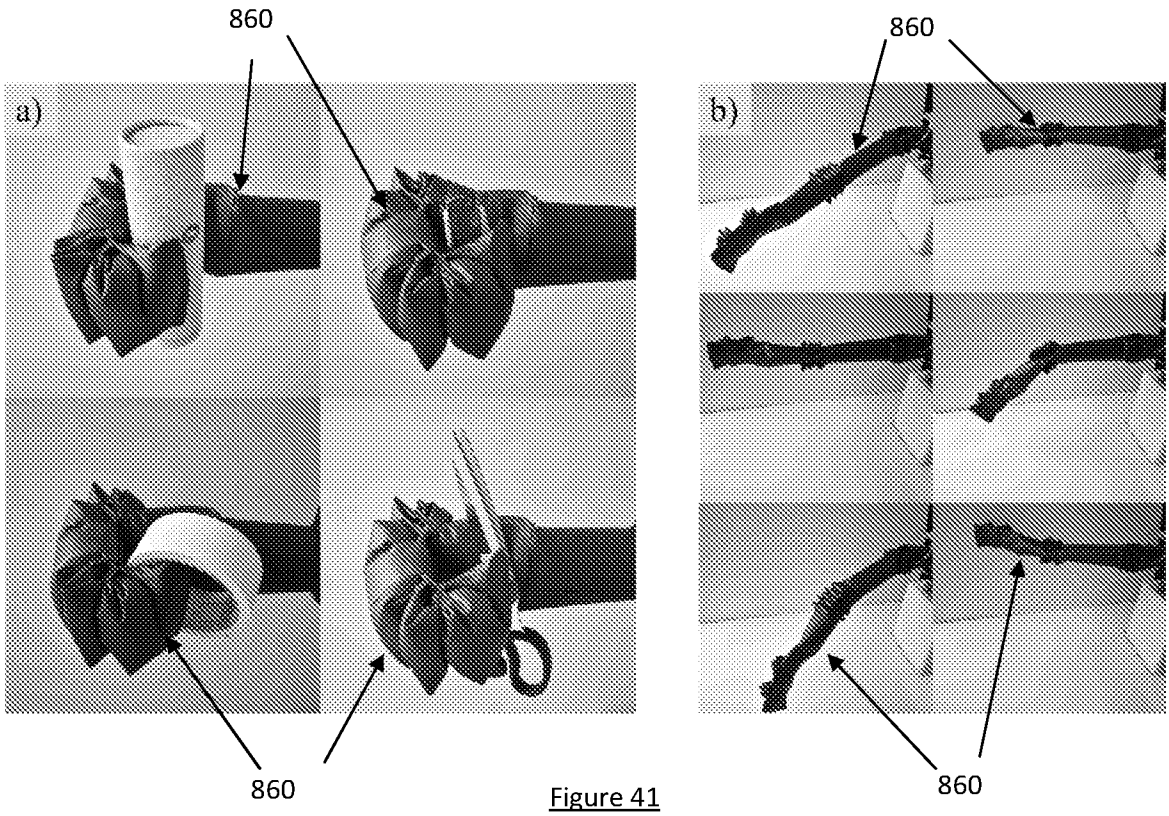

Figure 41

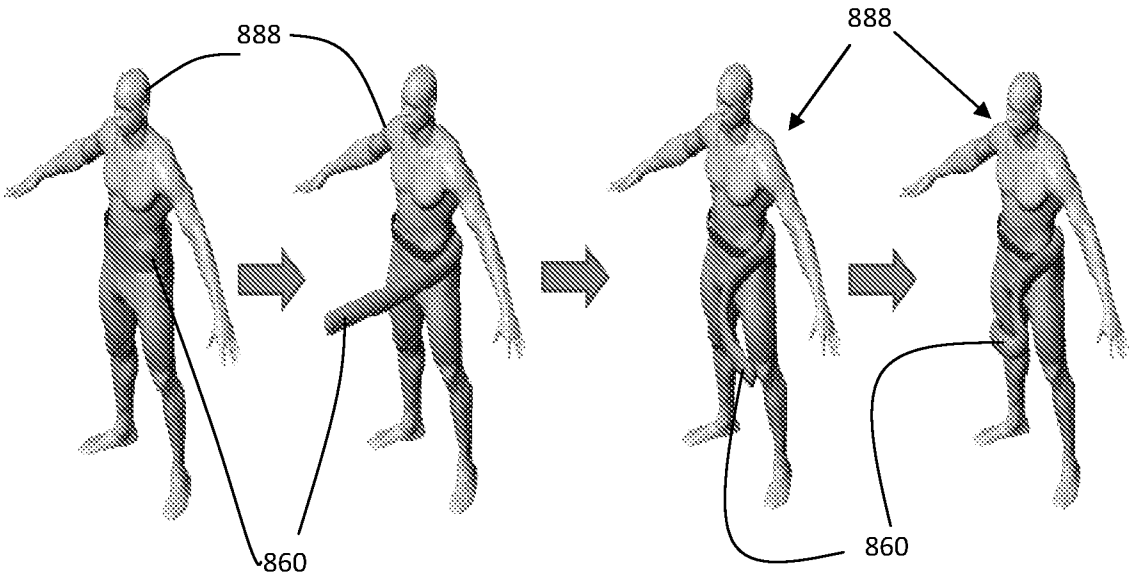

Figure 42

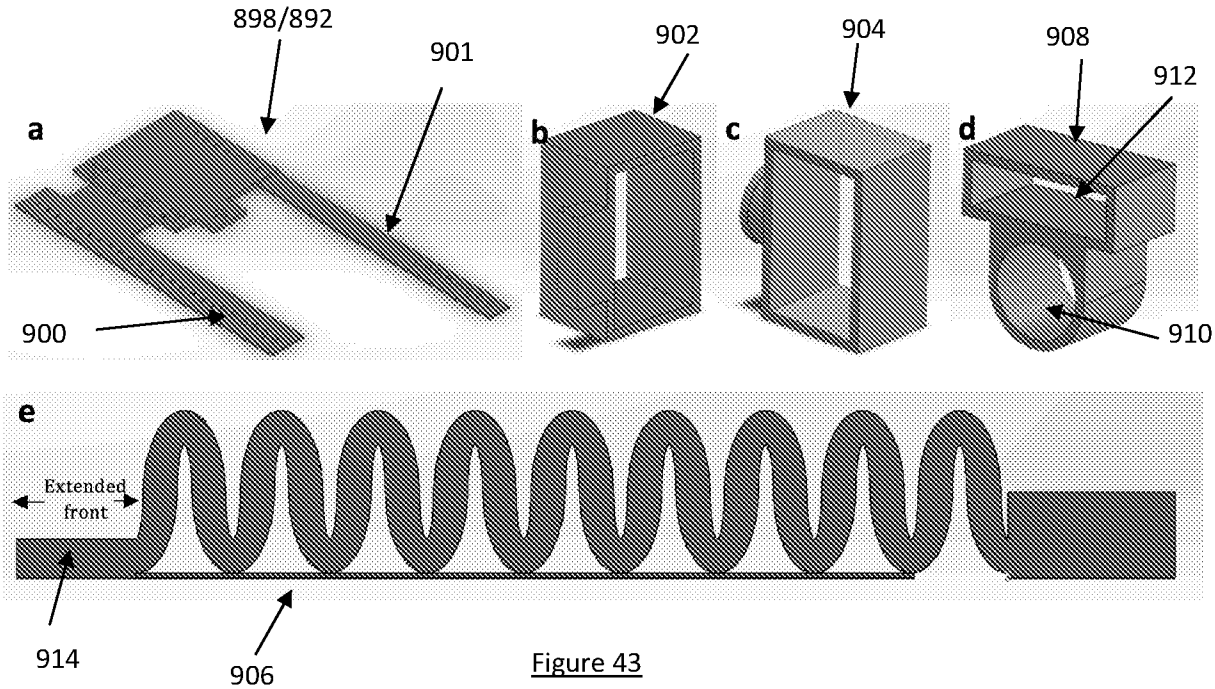

Figure 43

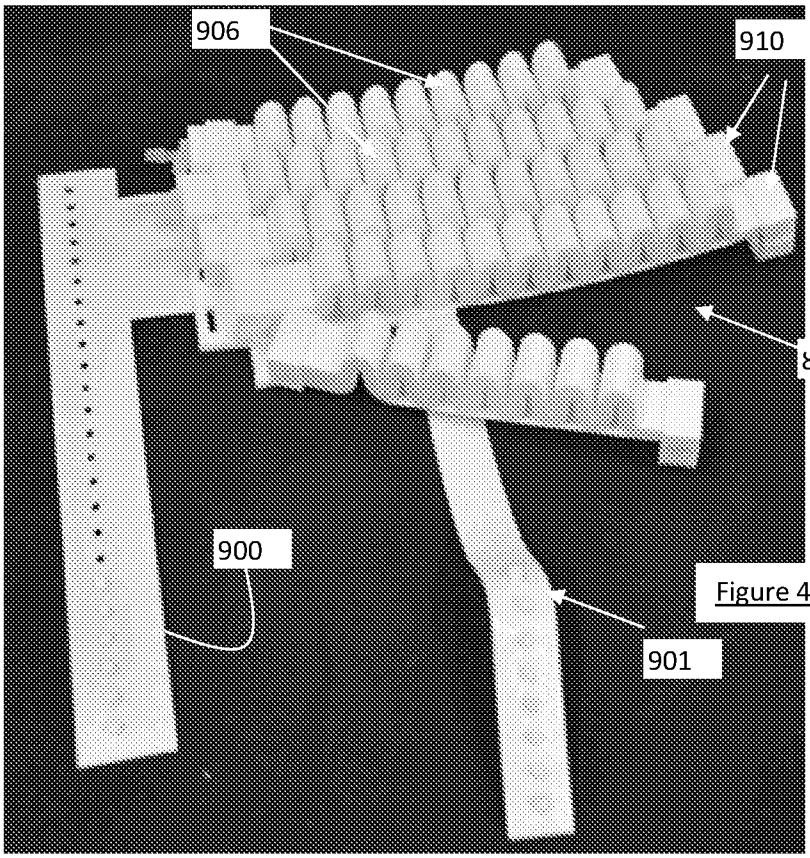

Figure 44

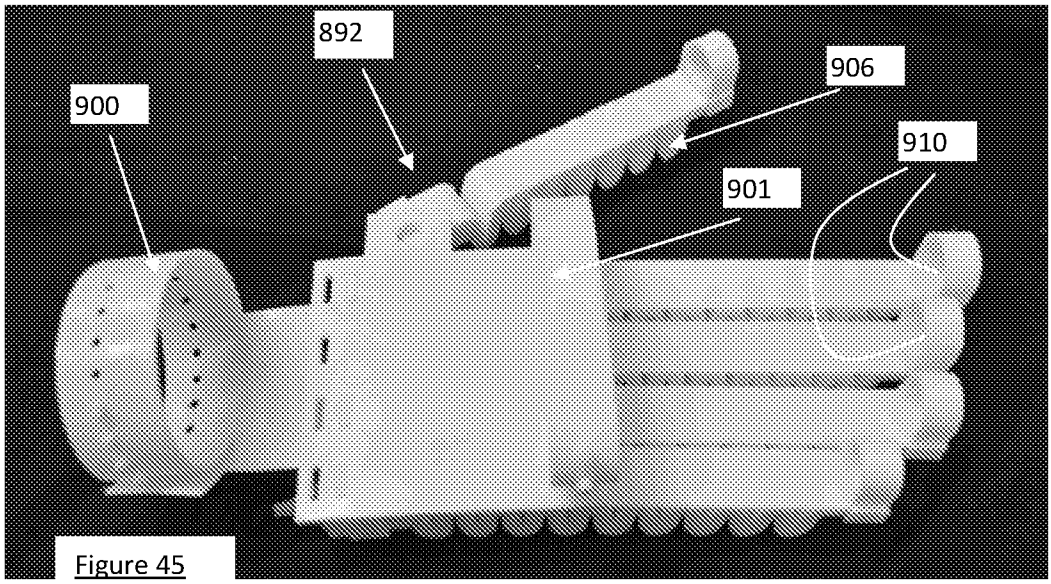

Figure 45

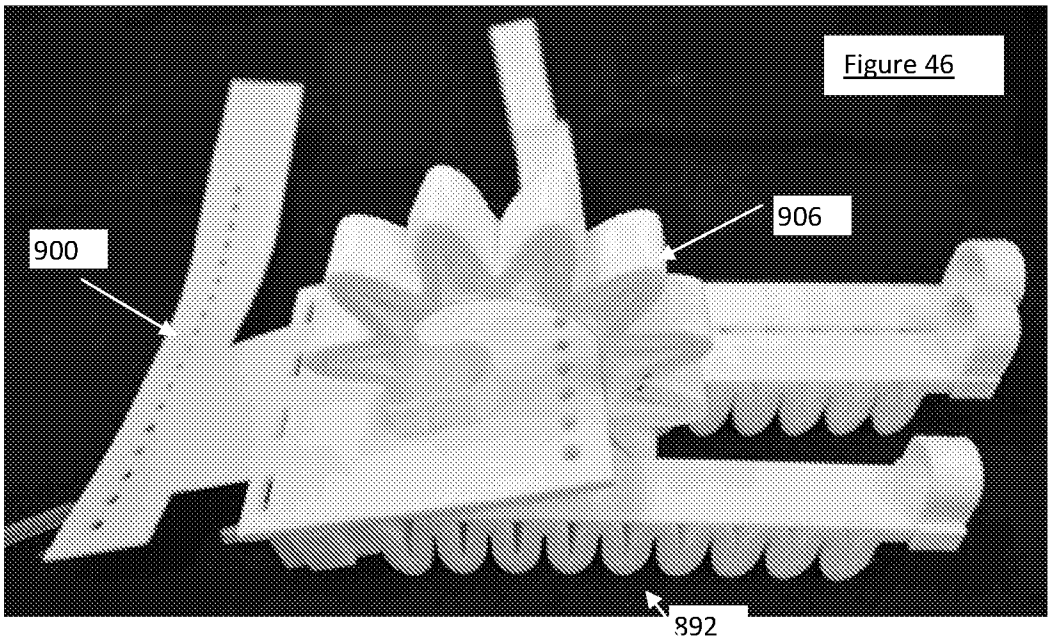

Figure 46

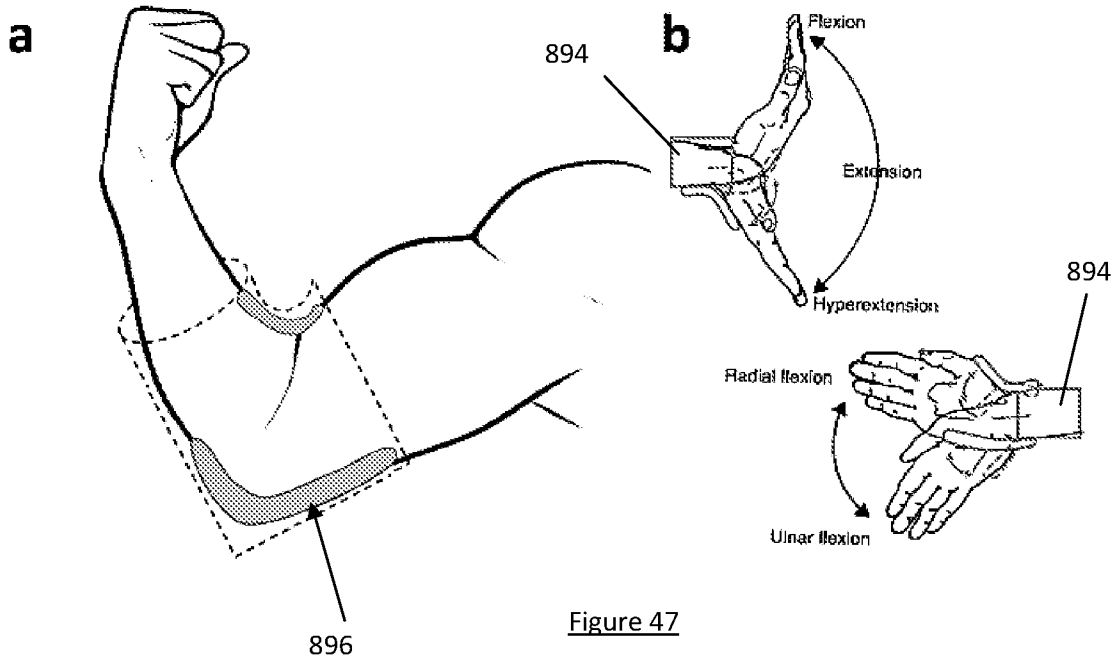

Figure 47

INTERNATIONAL SEARCH REPORT

International application No.
PCT/SG2018/050028

A. CLASSIFICATION OF SUBJECT MATTER

B25J 9/14 (2006.01) ***A61H 1/02 (2006.01)*** *F15B 15/00 (2006.01)*

According to International Patent Classification (IPC)

B. FIELDS SEARCHED

Minimum documentation searched (classification system followed by classification symbols)

B25J, A61H, F15B, A61F

Documentation searched other than minimum documentation to the extent that such documents are included in the fields searched

Electronic data base consulted during the international search (name of data base and, where practicable, search terms used)

Fampat and Google Scholar: actuator, fluid, liquid, pneumatic, air, bending, curve, flex, soft, pliable, undulating, wave, oscillate, curl, meander, bladder, inflatable, restraint, extension, linear, straightening, strain limiting, rehabilitation, prosthetic, robotic glove, exoskeleton, therapy, 致动, 驱动, 流体, 液压, 气动, 弯曲, 柔性, 软, 起伏, 波浪, 波动, 蜿蜒 and other related terms

C. DOCUMENTS CONSIDERED TO BE RELEVANT

Category*	Citation of document, with indication, where appropriate, of the relevant passages	Relevant to claim No.
X A	US 6178872 B1 (SCHULZ S.) 30 January 2001 Column 1, line 59 – Column 5, line 17 and Figures 1a-1c and 3a	1-10, 16-32 11-15
X	JP 2006-347 A (JAPAN SCIENCE & TECHNOLOGY AGENCY) 5 January 2006 Paragraphs [0027]-[0032] and Figures 1a, 1b, 2 and 3 of the machine translation	1-5, 7-10, 16-32
A	WO 2015/191007 A1 (NATIONAL UNIVERSITY OF SINGAPORE) 17 December 2015 Whole document	
A	US 2016/0252110 A1 (GALLOWAY K. ET AL.) 1 September 2016 Whole document	

☒ Further documents are listed in the continuation of Box C. ☒ See patent family annex.

*Special categories of cited documents:

"A" document defining the general state of the art which is not considered to be of particular relevance

"E" earlier application or patent but published on or after the international filing date

"L" document which may throw doubts on priority claim(s) or which is cited to establish the publication date of another citation or other special reason (as specified)

"O" document referring to an oral disclosure, use, exhibition or other means

"P" document published prior to the international filing date but later than the priority date claimed

"T" later document published after the international filing date or priority date and not in conflict with the application but cited to understand the principle or theory underlying the invention

"X" document of particular relevance; the claimed invention cannot be considered novel or cannot be considered to involve an inventive step when the document is taken alone

"Y" document of particular relevance; the claimed invention cannot be considered to involve an inventive step when the document is combined with one or more other such documents, such combination being obvious to a person skilled in the art

"&" document member of the same patent family

Date of the actual completion of the international search	Date of mailing of the international search report
12/03/2018 *(day/month/year)*	13/04/2018 *(day/month/year)*

Name and mailing address of the ISA/SG

IPOS INTELLECTUAL PROPERTY OFFICE OF SINGAPORE

Intellectual Property Office of Singapore
51 Bras Basah Road
#01-01 Manulife Centre
Singapore 189554

Email: pct@ipos.gov.sg

Authorized officer

Huang Wen (Dr)

IPOS Customer Service Tel. No.: (+65) 6339 8616

INTERNATIONAL SEARCH REPORT

International application No.
PCT/SG2018/050028

C (Continuation). DOCUMENTS CONSIDERED TO BE RELEVANT

Category*	Citation of document, with indication, where appropriate, of the relevant passages	Relevant to claim No.
A	CN 106309083 A (XI'AN JIAOTONG UNIVERSITY) 11 January 2017 Whole document of the original non-English language document (a machine translation is enclosed **only** for your reference)	
A	US 2015/0266186 A1 (MOSADEGH B. ET AL.) 24 September 2015 Whole document	

INTERNATIONAL SEARCH REPORT

Information on patent family members

International application No.

PCT/SG2018/050028

Note: This Annex lists known patent family members relating to the patent documents cited in this International Search Report. This Authority is in no way liable for these particulars which are merely given for the purpose of information.

Patent document cited in search report	Publication date	Patent family member(s)	Publication date
US 6178872 B1	30/01/2001	EP 1100418 A1 WO 00/04852 A1 DE 19833340 A1 AT 262868 T	23/05/2001 03/02/2000 10/02/2000 15/04/2004
JP 2006-347 A	05/01/2006	NONE	
WO 2015/191007 A1	17/12/2015	GB 2541623 A CN 106456435 A US 2017/0119614 A1 SG 11201609609T A	22/02/2017 22/02/2017 04/05/2017 29/12/2016
US 2016/0252110 A1	01/09/2016	WO 2015/066143 A1	07/05/2015
CN 106309083 A	11/01/2017	NONE	
US 2015/0266186 A1	24/09/2015	WO 2015/069360 A1	14/05/2015