(No Model.) 2 Sheets—Sheet 1.

W. P. BUTLER.

STREET LANTERN.

No. 435,795. Patented Sept. 2, 1890.

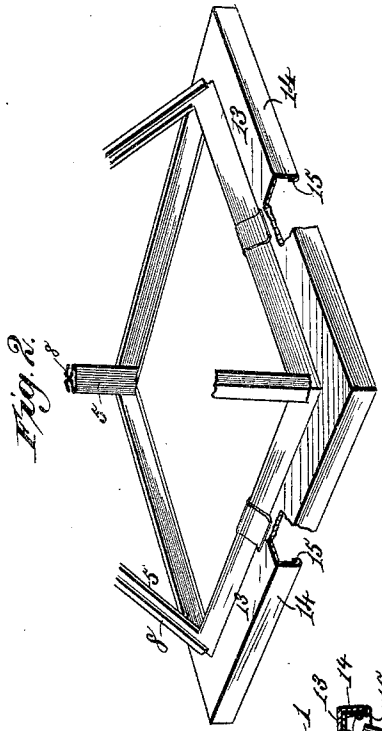

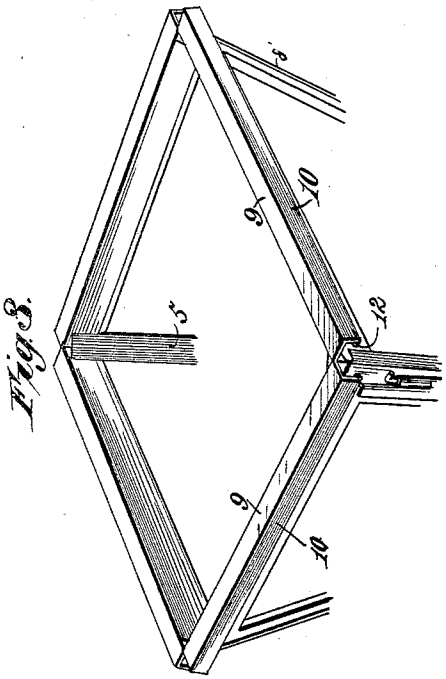

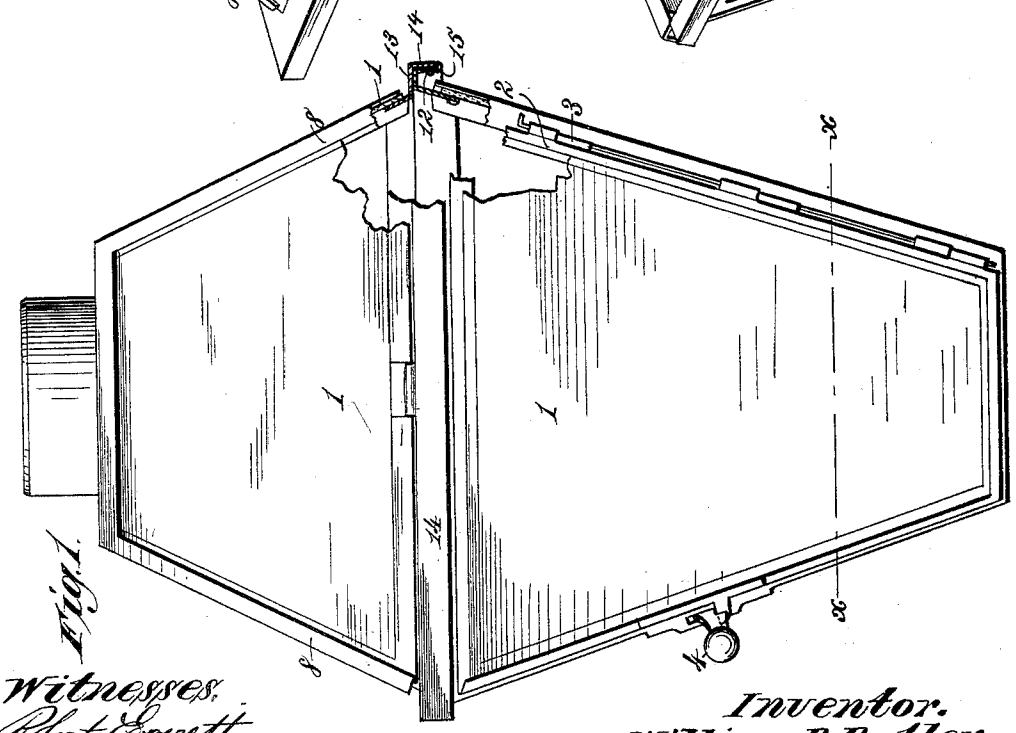

Witnesses.
Robt Everett.
J. G. Meyers Jr.

Inventor.
William P. Butler.
By James L. Norris.
Atty.

THE NORRIS PETERS CO., PHOTO-LITHO., WASHINGTON, D. C.

(No Model.) 2 Sheets—Sheet 2.

W. P. BUTLER.

STREET LANTERN.

No. 435,795. Patented Sept. 2, 1890.

Fig. 4.

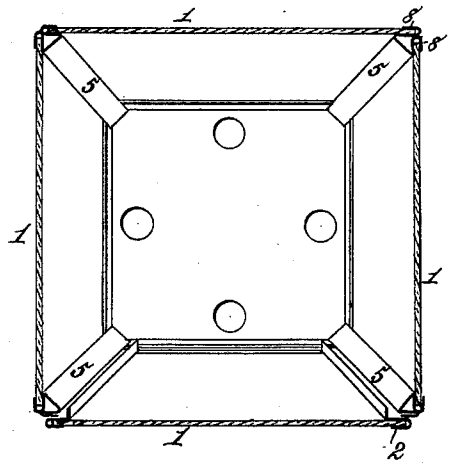

Fig. 5.

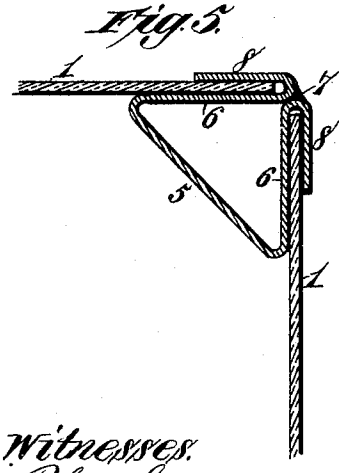

Fig. 6.

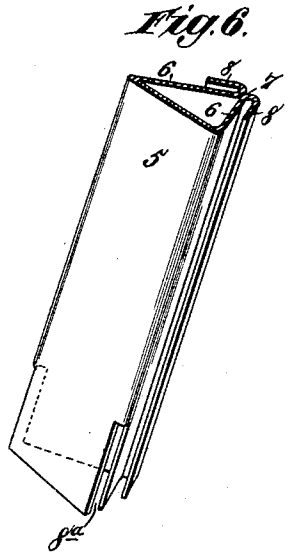

Witnesses.
Robert Everett.
J. G. Meyers Jr.

Inventor.
William P. Butler.
By James L. Norris.
Atty.

THE NORRIS PETERS CO., PHOTO-LITHO., WASHINGTON, D. C.

UNITED STATES PATENT OFFICE.

WILLIAM P. BUTLER, OF CHICAGO, ILLINOIS.

STREET-LANTERN.

SPECIFICATION forming part of Letters Patent No. 435,795, dated September 2, 1890.

Application filed November 4, 1889. Serial No. 329,136. (No model.)

To all whom it may concern:

Be it known that I, WILLIAM P. BUTLER, a citizen of the United States, residing at Chicago, in the county of Cook and State of Illinois, have invented new and useful Improvements in Street-Lanterns, of which the following is a specification.

The invention has for its object to provide novel means for permanently uniting the top and bottom glass-carrying frame-sections of a lantern by a self-locking joint or connection, whereby soldering, spinning, and like fastening mediums are avoided and the cost of manufacture is reduced.

To accomplish this object my invention consists in the features of construction and combination of devices hereinafter described and claimed, reference being made to the accompanying drawings, in which—

Figure 1 is a side elevation, part in section, of a street-lantern constructed according to my invention. Fig. 2 is a detail broken perspective view of the top glass-carrying frame-section of the lantern. Fig. 3 is a similar view of the bottom frame-section of the same. Fig. 4 is a horizontal sectional view taken on the line *x x*, Fig. 1. Fig. 5 is a detail transverse sectional view of one of the corner-posts on an enlarged scale, and Fig. 6 is a broken perspective view of one end portion of a corner-post on an enlarged scale.

In order to enable those skilled in the art to make and use my invention, I will now describe the same in detail, referring to the drawings, wherein—

The numeral 1 indicates the glass panes, secured at their adjacent edges in the corner-posts, and 2 indicates the lantern-door, hinged at 3 and provided with a fastening-catch at 4. The post to which the door is hinged and the post against which the door closes may be of the form shown. The corner-posts are each composed of a strip of sheet metal bent to form a flat wall 5 and two flat side walls 6, Figs. 5 and 6, arranged at acute angles to the wall 5 and converging outwardly and resting one against the other, as at 7, beyond which point of contact the converging walls are bent around in opposite directions toward the wall 5 in such manner as to form two longitudinal hooked flanges 8, which are respectively parallel, or substantially so, to the external surfaces of the converging walls. The upper and lower ends of the corner-posts are soldered or otherwise secured to the end portion of the lower frame-section of the lantern, and the corner-posts of the top frame-section or crown of the lantern are secured to the top and bottom portions of such top section or crown. The corner-posts may be provided at each end with a vertical slot 8^a at the junction of the walls 5 and 6 to slip over vertically-arranged portions at the corners of the end frame of the lantern, after which the posts are soldered or similarly secured together.

The top glass-carrying frame-section or crown of a street-lantern is usually made separate from the bottom glass-carrying frame-section, and to provide a simple construction of parts whereby the top section or crown can be slipped down over the upper end of the bottom section and be automatically locked permanently thereto I construct the upper end of the bottom frame-section with horizontal or substantially horizontal side flanges 9, from the outer edges of which depend vertical or nearly vertical wings 10, which are adapted to spring laterally outward by their inherent elasticity. The spring or elastic wings are preferably strengthened along the inside by a bead formed by turning the metal as at 12 or otherwise. The top frame-section is constructed at the sides with horizontal flanges 13, from the outer edges or portions of which depend vertically-arranged flanges 14, such flanges comprising a right-angled substantially rigid frame at the lower portion of the top section. The lower horizontal edges of the flanges 14 are each provided at its inner side with a locking rim or bead 15, which may be formed in any suitable way, but which, as shown, is formed by turning the edge of the metal upward into a rim. The horizontal flanges 9 of the bottom section constitute a base or support for the horizontal flanges 13 of the top frame-section, and when the latter is forced down into position the rims or beads 15 press the wings 10 laterally inward until said rims or beads fall beneath the lower edges of the wings, when the latter will by their inherent elasticity spring outward and by their lower edges or beads 12

will automatically engage or interlock with the rims or beads 15, thereby securely and permanently uniting the two sections without soldering or spinning one part into engagement with another.

Having thus described my invention, what I claim is—

A lantern comprising a top and bottom frame-section, one provided with laterally-yielding spring-wings and the other with flanges having inwardly-turned locking rims or beads and adapted to slide over and be automatically engaged by the spring-wings when slid thereupon for permanently uniting the parts, substantially as described.

In testimony whereof I have affixed my signature in presence of two witnesses.

WILLIAM P. BUTLER.

Witnesses:
GEO. C. MARSH,
L. D. MORSBACH.