A. A. HUNZIKER.

TEMPORARY BINDER.

APPLICATION FILED JAN. 28, 1911.

1,023,566. Patented Apr. 16, 1912.

Fig. 1.

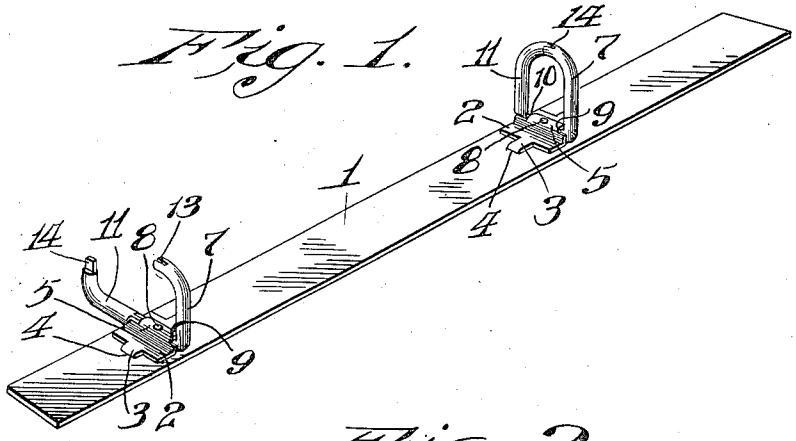

Fig. 2.

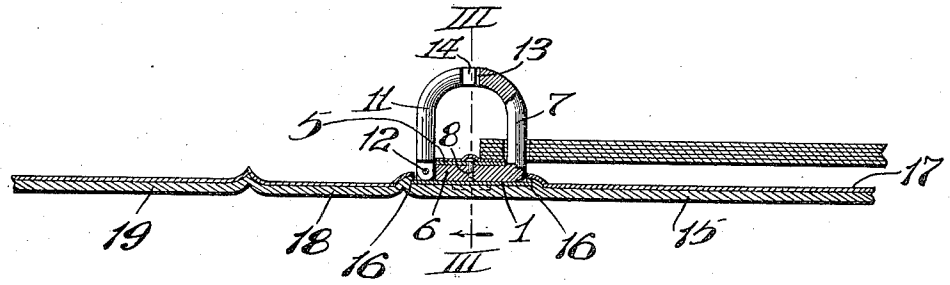

Fig. 3.

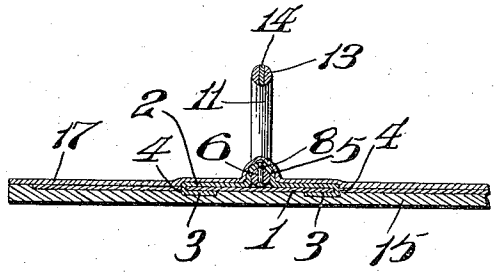

Fig. 4.

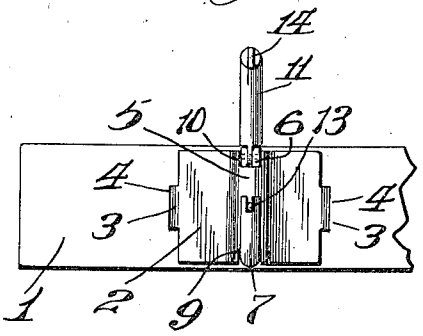

Attest:
L. G. Fletcher.
M. C. Hammon

Inventor:
Adolph A. Hunziker.
By Knight Bros
Attys.

COLUMBIA PLANOGRAPH CO., WASHINGTON, D. C.

UNITED STATES PATENT OFFICE.

ADOLPH A. HUNZIKER, OF ST. LOUIS, MISSOURI, ASSIGNOR TO WOODWARD & TIERNAN PRINTING COMPANY, OF ST. LOUIS, MISSOURI, A CORPORATION OF MISSOURI.

TEMPORARY BINDER.

1,023,566. Specification of Letters Patent. Patented Apr. 16, 1912.

Application filed January 28, 1911. Serial No. 605,159.

To all whom it may concern:

Be it known that I, ADOLPH A. HUNZIKER, a citizen of the United States, residing at St. Louis, in the State of Missouri, have invented a certain new and useful Improvement in Temporary Binders, of which the following is a specification.

An object of the present invention is to provide improvements in the posts and post mountings in a temporary binder, and a specific object of the present invention is to so construct the posts and their mountings that a neater, less costly and stronger binder is obtained.

My improvements apply especially to that type of temporary binder shown in my Patent No. 605,717, of June 14, 1898, entitled file and binder, and are fully described in the following specification and shown in the drawings in which like reference numbers refer to like parts and in which,

Figure 1 is a perspective view of the assembled anchor plate or strip with the respective pairs of separable posts mounted thereon, showing the posts of one pair separated. Fig. 2 is an end view of the same with the parts in section and showing the assembled anchor plate and posts mounted in the binder cover and showing leaves or sheets held by said posts, parts of the cover and leaves being broken away. Fig. 3 is a longitudinal vertical section on the line III—III, Fig. 2. Fig. 4 is a plan view of a portion of the anchor plate and a pair of posts mounted thereon showing also in plan the clamp for securing said posts to the anchor plate.

Referring now in detail to the drawings, 1 is the anchor plate of my improved temporary binder to which is secured a clamp 2 by tongues 3 which extend through perforations 4 in plate 1 and are bent flat against the under surface of said plate. Clamp 2 has a central raised or arched bearing portion 5 which forms a recess in the under side which receives the bent lower end or lateral extension 6 of a stationary post 7 and is riveted thereto by a rivet 8 which passes through the lower end or extension 6. Extension 6 extends entirely across the clamp 2 and the bearing portion 5 of the clamp 2 is notched inwardly at 9 at its end to receive the vertical portion of stationary post 7 and is also notched at 10 to receive a movable post 11. The movable post 11 is pivoted at 12, Fig. 2, to the lower end 6 of the stationary post 7. Posts 7 and 11 are at their upper end curved toward each other and provided with an interlocking joint, in the drawings being shown as a recess 13 in the post 7 and a tongue 14 on the post 11.

The foregoing illustrates the method of mounting a pair of posts on the anchor plate of the temporary binder. Any number of pairs of such posts may be used in the binder, in the drawings there being shown but two such pairs. When the posts are mounted on the anchor plate, the same is secured preferably to one of the cover leaves 15, in a manner, for instance, as shown in the drawings, wherein oppositely facing grooves 16 are formed in leaf 15 which receive the opposite edges of the anchor plate 1 after which the anchor plate 1 and clamps 2 are covered by a finishing layer or lining 17 of suitable material.

18 represents the back of the binder cover substantially equal in depth to the depth of the binder posts and hinged to the leaf 15 of the cover. 19 is the opposite leaf of the cover.

What I claim is:

In a temporary binder, an anchor plate, a clamp secured to said plate and having an arched bearing, a stationary post having one end bent to form a lateral extension which extends through said bearing, and a movable post pivoted to the end of said lateral extension, said bearing being notched at the ends to receive said binder posts.

ADOLPH A. HUNZIKER.

In the presence of—
DANIEL J. KERWIN,
JAMES P. WILSON.

Copies of this patent may be obtained for five cents each, by addressing the "Commissioner of Patents, Washington, D. C."