Nov. 23, 1937. J. W. GRAHAM 2,099,957

TOY AIRPLANE CATAPULT

Filed March 14, 1936

Fig. 1

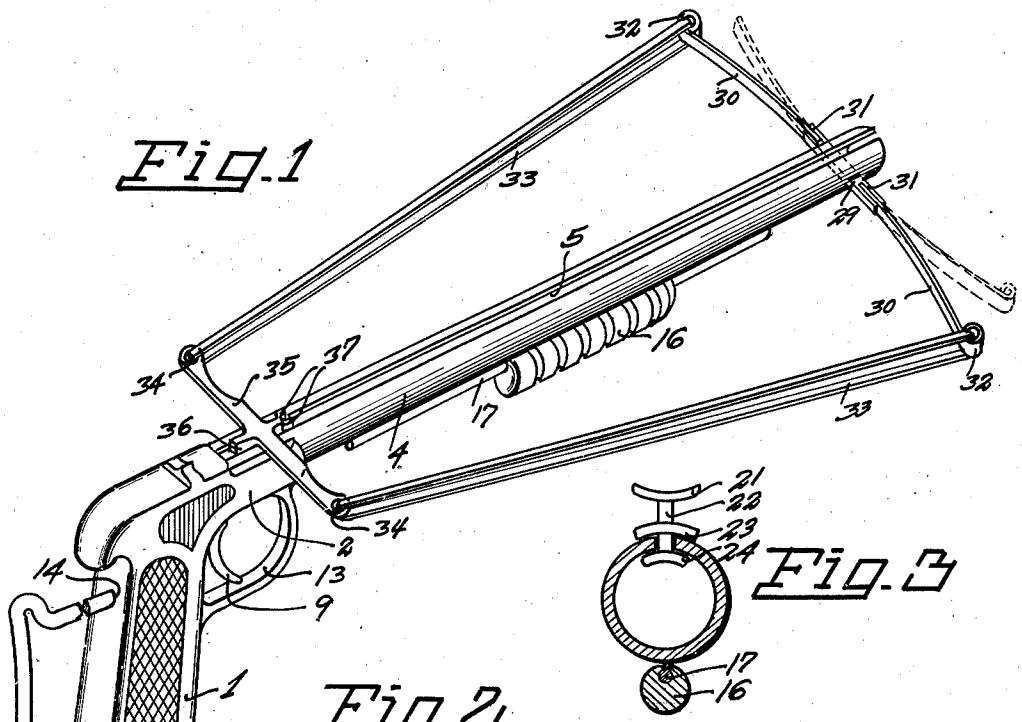

Fig. 3

Fig. 2

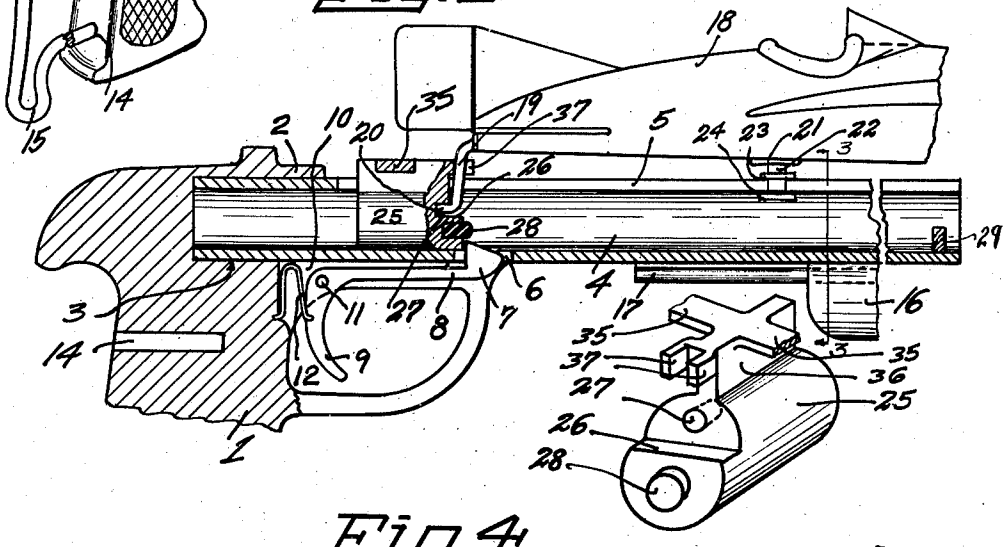

Fig. 4

Inventor

Joseph W. Graham

By Glenn L. Fish

Attorney

Patented Nov. 23, 1937 2,099,957

UNITED STATES PATENT OFFICE

2,099,957

TOY AIRPLANE CATAPULT

Joseph W. Graham, Spokane, Wash.

Application March 14, 1936, Serial No. 68,849

1 Claim. (Cl. 124—21)

This invention relates to a catapult for toy airplanes and one object of the invention is to provide a device of this character so constructed that it resembles a pistol and may be held in a person's hand while launching the toy airplane.

Another object of the invention is to so form the device that it includes a stock or handle by which it is to be held, a barrel extending from the stock and adapted to support the toy airplane to be launched, resilient impelling means carried by the barrel, and a trigger for holding the impelling means in a set position carried by the stock in such position that it may be actuated by a finger of the hand grasping the stock.

Another object of the invention is to so construct the barrel that a block forming part of the impelling means will be slidably mounted therein and moved forwardly with great force when released by actuation of the trigger so that the toy airplane will be launched at high speed.

Another object of the invention is to provide improved means for guiding movement along the barrel when launched and thus cause accurate launching thereof.

Another object of the invention is to provide a device of this character which resembles a cross bow and may be used for discharging arrows as well as for launching toy airplanes.

Another object of the invention is to provide a device of this character which may be operated with one hand as a pistol is handled or used in the same manner as a rifle.

The invention is illustrated in the accompanying drawing, wherein:

Fig. 1 is a perspective view of the improved catapult.

Fig. 2 is a sectional view taken longitudinally through the device.

Fig. 3 is a sectional view taken transversely through the barrel along the line 3—3 of Figure 2.

Fig. 4 is a perspective view of the block which is slidably mounted in the barrel.

This device which is intended for use as a catapult for launching toy airplanes has a handle 1 shaped like the stock of a pistol and having its upper portion extended forwardly to provide an arm or extension 2 bored from its front end to form a socket 3 into which fits the rear end portion of the barrel 4. The handle is preferably formed of wood although any desired material may be used but the barrel consists of a metal tube and has its upper side portion formed with a longitudinally extending slot 5 leading from its front end and terminating in spaced relation to its rear end. The upper portion of the arm 2 is open as shown in Figure 1 so that the slot will be exposed for its entire length, and a short distance in advance of the rear end of the slot the barrel has its under portion formed with an opening 6 to receive the bill or hook 7 formed at the front end of the arm 8 of the trigger 9. This trigger is pivotally mounted in a slot or groove 10 formed in the extension 2 under the socket 3 by a pin 11 and is yieldably held in its normal position by a U-shaped spring 12 which is mounted in the rear portion of the slot or trigger seat 10 and yieldably resists rearward movement of the trigger. The usual trigger guard 13 extends forwardly from the handle to the front end of the extension 2 and serves as a guard for the trigger and also as a brace for the extension. By forming the handle as set forth above it may be grasped with one hand in the same manner in which a pistol is held and one finger passed through the trigger guard to engage the trigger and exert pressure thereon when an airplane is to be launched. Sockets 14 are formed in the back of the handle to receive the arms of a yoke 15 formed of rod-metal which when in place extends rearwardly from the handle and is of sufficient length to bear against a person's shoulder and function as a rifle stock. When the yoke or auxiliary stock 15 is applied and the device used as a rifle instead of as a pistol it is necessary to support the barrel intermediate its length and therefore there has been provided a grip 16 formed of wood or other desired material and having its upper side portion formed with an undercut groove to receive the beaded rib 17 carried by the barrel. As the grip 16 is slidable along the rib it may be shifted to a position in which it can be conveniently grasped by a person using the device.

An airplane 18 which is to be launched is disposed over the barrel longitudinally thereof as shown in Figure 2 and at its rear end carries a depending wire finger 19 which extends through the slot 5 and ends in a rearwardly projecting terminal 20. A support 21 is carried by the airplane intermediate its length and has a depending stem 22 carrying flanges 23 and 24 to bear against outer and inner faces of the barrel at opposite sides of the slot 5 when the support is slid into the slot through the open front end thereof. By this arrangement of guides the airplane will be supported in its proper position longitudinally of the barrel and will be prevented from tilting transversely or diverging from

a straight path when moving longitudinally of the barrel as it is discharged.

An impeller 25 consisting of a block of wood or metal which is cylindrical in shape and of a diameter to slide freely within the barrel fits into the barrel as shown in Figure 2 and has the upper portion of its front end stepped as shown at 26 to provide a shoulder upon which the terminal 20 of the finger 19 is adapted to rest when the finger is passed through the slot 5 and the terminal engaged in the socket 27 formed in the block above the shoulder. A bumper 28 of rubber projects forwardly from the block below the shoulder to absorb shocks when forward movement of the impeller is halted by engagement of the bumper with a cross bar 29 extending transversely through the barrel close to the front end thereof and forming a portion of a bow which is completed by the strips 30 of resilient metal. These strips 30 have their inner ends firmly seated in kerfs 31 formed in ends of the rigid bar 29 and have their outer ends rolled to form eyes 32 through which are threaded rubber bands 33. These rubber bands extend longitudinally of the barrel at opposite sides thereof and have their rear end portions threaded through eyes 34 formed at ends of a cross bar 35 carried by and extending transversely of a web 36 which rises from the block 25 and extends longitudinally thereof. This web is slidably received in the slot 5 of the barrel with the cross bar 35 disposed over the barrel as shown in Figure 1 and at its front end the web is formed with forks 37 adapted to straddle the finger 19. Therefore the finger will be maintained in a vertical position out of contact with walls of the slot 5 and it will slide freely through the slot during launching of the airplane.

When this device is in use the finger 19 and guide stem 22 are engaged through the slot 5 and the airplane shifted longitudinally of the barrel towards the rear end thereof. During this movement the terminal of the finger engages in the socket 27 of the impeller and the impeller will be carried rearwardly with the airplane to a position within the extension 2 of the handle and as it approaches this position it rides over the bill 7 of the trigger and comes to rest back of the bill which holds it in the set position. Rearward movement of the impeller stretches the rubber bands and also flexes the resilient strips 30 of the bow and therefore strong pull will be exerted upon the cross bar 35 of the impeller and when the person using the device exerts pressure upon the trigger to swing the arm 8 thereof downwardly and move the bill through the opening 6 out of a position in front of the impeller, the impeller will be drawn rapidly towards the front end of the barrel and carry the airplane forwardly with it. Forward movement of the impeller is halted when the bumper engages the portion of the cross bar extending transversely through the barrel but the airplane will continue its forward movement and be discharged from the catapult with sufficient force to cause it to take flight and sail forwardly through the air. As the guide 21 and the finger 19 prevent transverse shifting of the airplane or tilting thereof as it moves along the barrel it will be held in a true course and caused to fly through the air in the desired direction.

Having thus described the invention, what is claimed is:

A catapult comprising a handle, a tube extending from said handle and formed with a longitudinally extending slot open at its front end, a cross bar extending transversely through said tube near the front end thereof, resilient strips carried by the cross bar and projecting from opposite ends thereof, a block slidable longitudinally in said tube and having a web along its upper portion projecting outwardly through said slot and formed with forks at its front end, a crosshead carried by the outer end of said web back of the forks and projecting from opposite sides of the tube, elastic bands connecting ends of said crosshead with outer ends of the resilient strips, a bumper projecting forwardly from said block within the tube for engaging the crossbar and limiting forward movement of the block when projected forwardly, the front end of the block above the bumper being stepped rearwardly to form a horizontal shoulder and above the shoulder being formed with a socket open at its front, an opening being formed in the under portion of said tube, a trigger pivoted to said handle and having a forwardly projecting arm carrying a bill projecting through the opening into the tube in position to engage the block under the bumper and hold the block in a set position with the elastic bands and resilient strips tensioned, and a spring engaging said trigger and yieldably resisting movement of the trigger in a direction to move the bill outwardly through the opening to a position for releasing the block.

JOSEPH W. GRAHAM.