April 2, 1968 F. W. CURTIS ETAL 3,375,621

PREFABRICATED FOAM EXPANSION JOINTS

Original Filed March 2, 1964 4 Sheets-Sheet 1

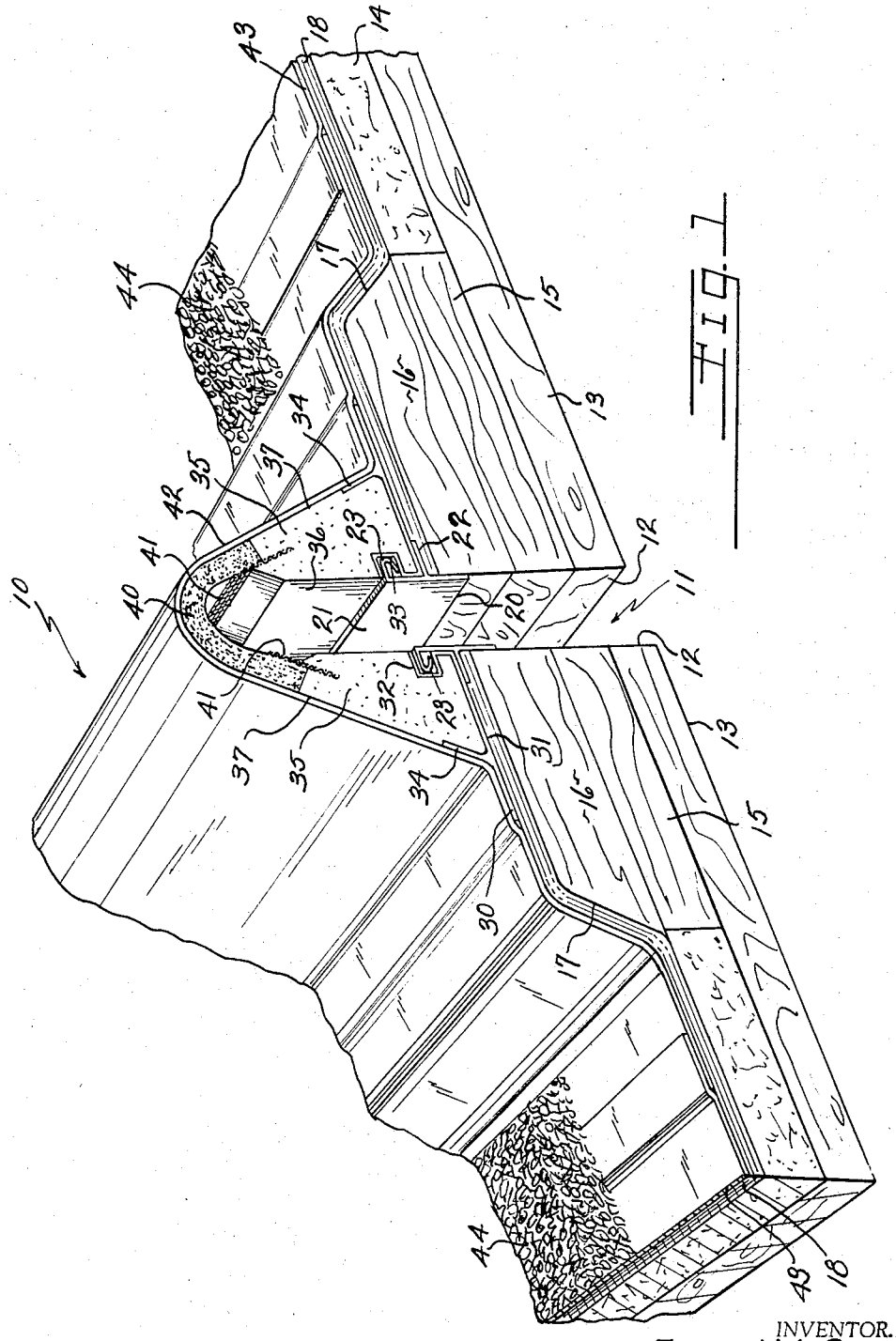

FIG. 1

INVENTOR.
FRANK W. CURTIS
MALCOLM H. NICKERSON
BY
Meyer, Baldwin, Doran & Egan
ATTORNEYS

April 2, 1968 F. W. CURTIS ET AL 3,375,621

PREFABRICATED FOAM EXPANSION JOINTS

Original Filed March 2, 1964 4 Sheets-Sheet 2

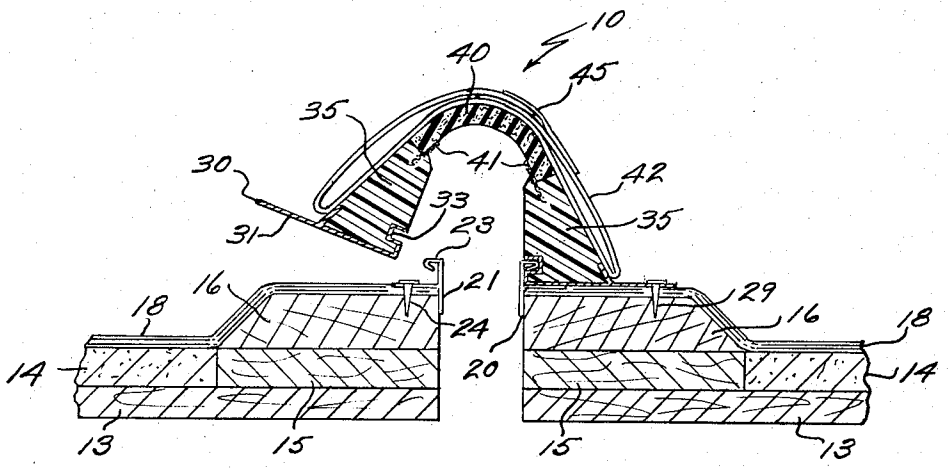

Fig. 2

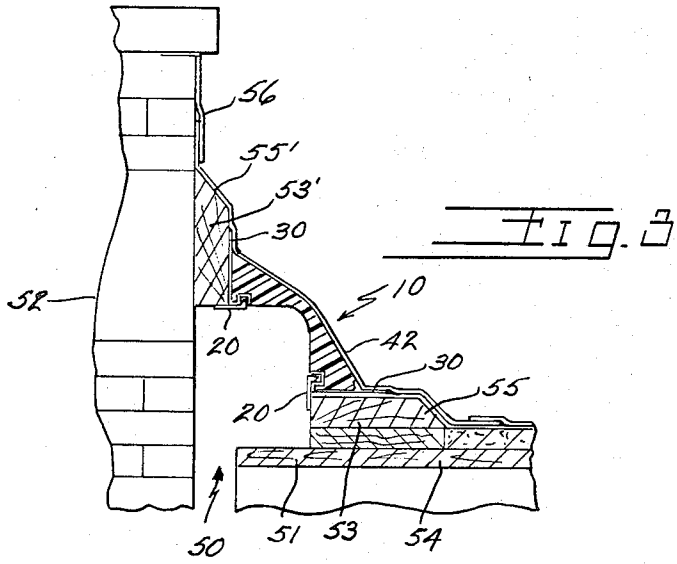

Fig. 3

INVENTOR.
FRANK W. CURTIS
MALCOLM H. NICKERSON
BY
Meyer, Baldwin, Doran & Egan
ATTORNEYS

April 2, 1968 F. W. CURTIS ETAL 3,375,621

PREFABRICATED FOAM EXPANSION JOINTS

Original Filed March 2, 1964 4 Sheets-Sheet 3

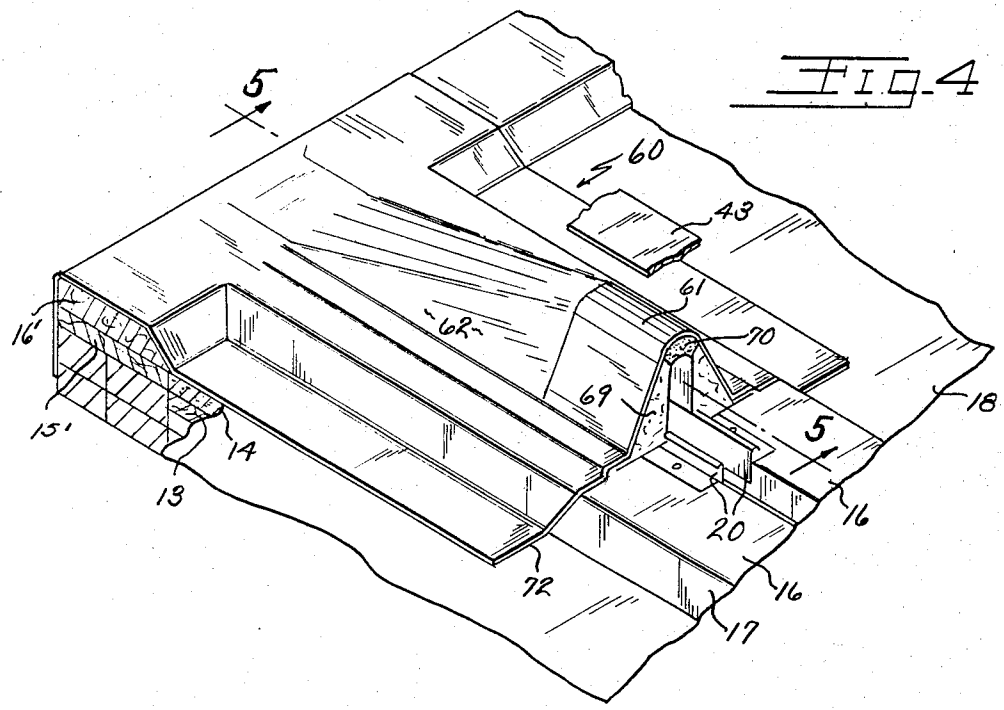

Fig. 4

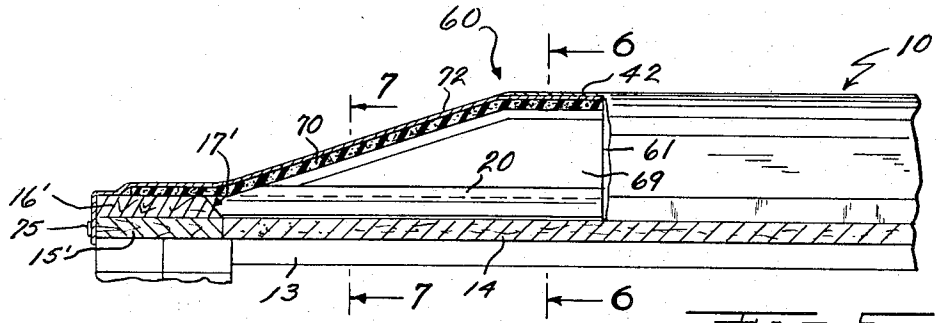

Fig. 5

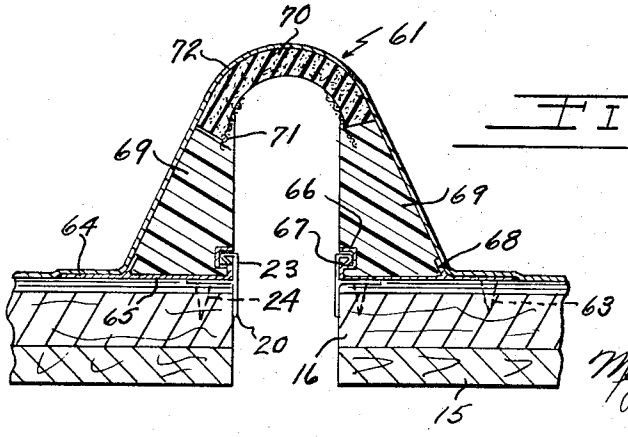

Fig. 6

INVENTOR.
FRANK W. CURTIS
MALCOLM H. NICKERSON
BY
Meyer, Baldwin, Doran & Egan
ATTORNEYS

April 2, 1968 F. W. CURTIS ETAL 3,375,621

PREFABRICATED FOAM EXPANSION JOINTS

Original Filed March 2, 1964 4 Sheets-Sheet 4

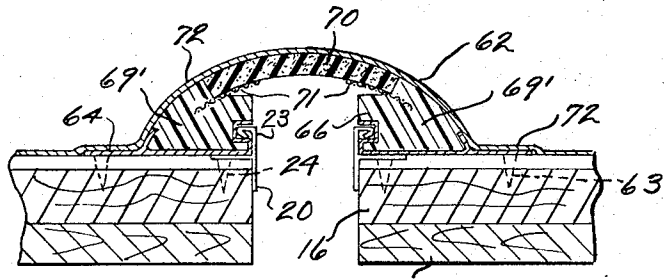

Fig. 7

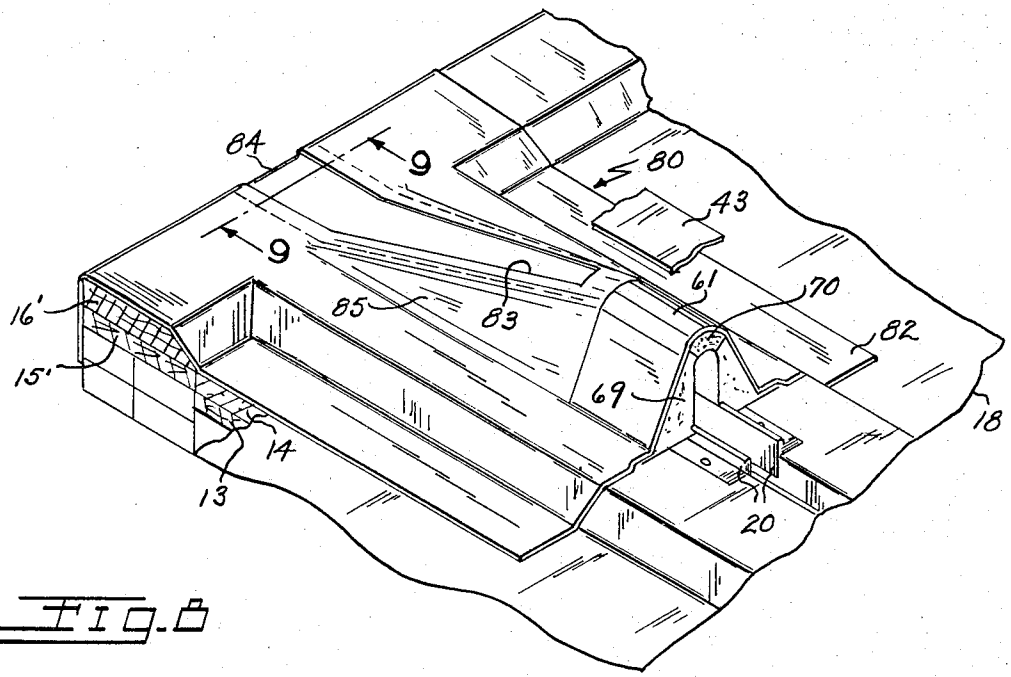

Fig. 8

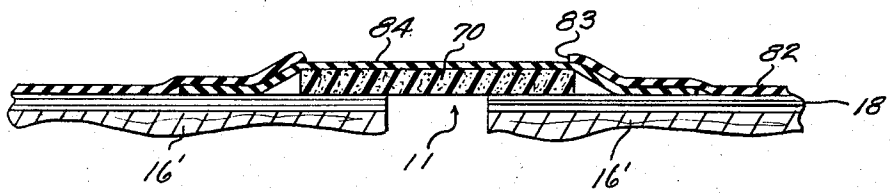

Fig. 9

INVENTOR.
FRANK W. CURTIS
MALCOLM H. NICKERSON
BY
Meyer, Baldwin, Doran & Egan
ATTORNEYS

United States Patent Office

3,375,621

Patented Apr. 2, 1968

1

3,375,621

PREFABRICATED FOAM EXPANSION JOINTS

Frank W. Curtis, Chagrin Falls, and Malcolm H. Nickerson, South Russell, Ohio, assignors to Lexsuco, Inc., Solon, Ohio, a corporation of Ohio

Continuation of application Ser. No. 348,725, Mar. 2, 1964. This application Jan. 6, 1967, Ser. No. 621,373

4 Claims. (Cl. 52—58)

ABSTRACT OF THE DISCLOSURE

An expansion joint for bridging two building sections, having a cover of flexible material, the ends of which are secured to the narrow portions of wedge shaped side members formed of rigid foam, a strip of flexible foam material secured along the center of the cover, and a nailing strip carried at the wide portions of the wedge shaped side members.

This invention relates to expansion joints and particularly to a prefabricated roof expansion joint. This application is a continuation of our co-pending application for Expansion Joints, Ser. No. 348,725, filed Mar. 2, 1964, and now abandoned.

As a résumé thereof, the present expansion joint is one for closing the gap between two adjacent building sections which have relative movement under widely variant ambient temperatures. More specifically, the expansion joint includes (a) a pair of elongated insulating side members, one for securement to each building section on opposite sides of said gap, (b) an elongated flexible insulating member overlying said gap and hingedly connecting said side members, (c) an insulating cover overlying said side members and the connecting hinge-forming member therefor, and (d) means cooperating with said side members and said building sections to prevent relative expansion movement thereof.

In the construction of large buildings such as warehouses and factories and particularly where such structures are built upon a framework of steel, the inherent tendency of the structural members to expand and contract as a result of fluctuating temperatures makes it highly desirable if not absolutely necessary that the building be constructed in separate sections, or sections which are allowed movement relative to each other. The separate sections must, of course, be joined by some means which will afford protection against weather and will, at the same time, provide for relative movement between the sections.

This invention has for its primary object the provision of a prefabricated expansion joint for effectively joining the separate sections of a building at the roof level, said expansion joint being characterized by its structural simplicity, its inexpensive manufacturing cost, and the particularly effective manner in which it performs its intended functions.

More specifically, it is an object of the present invention to provide an expansion joint as set forth above wherein elongated, rigid insulating side members are provided on two building sections on opposite sides of a gap therebetween, the uppermost edges of said side members being hingedly connected by a flexible insulating center strip.

2

Yet another object is to provide, in the above expansion joint, an insulating cover which overlies the center strip and the side members hingedly connected thereby and which extends laterally beyond the side members for attachment to the building sections.

A further object is to provide a complementary roof-to-eave transition structure for completing and terminating the expansion joint adjacent to the outside edges of the building sections.

Further objects of the present invention and a number of its advantages will be referred to in or will be evident from the following description of one main embodiment of the invention and one variation of the transition structure as illustrated in the accompanying drawings in which,

FIG. 1 is an end perspective of a portion of the expansion joint of this invention;

FIG. 2 is a transverse section of the expansion joint partially assembled to the roof sections;

FIG. 3 is a transverse section of the expansion joint, shown in simplified form, illustrating a roof-to-parapet application thereof;

FIG. 4 is a perspective view of the roof-to-eave transition structure;

FIG. 5 is a longitudinal section through the transition structure taken along the line **5**—**5** of FIG. 4;

FIG. 6 is a transverse section taken along the line **6**—**6** of FIG. 5;

FIG. 7 is a transverse section taken along the line **7**—**7** of FIG. 5;

FIG. 8 is a perspective view of a variation of the roof to eave transition structure; and

FIG. 9 is a transverse section taken along the line **9**—**9** of FIG. 8.

Before the expansion joints illustrated are specifically described, it is to be understood that the invention here involved is not limited to the structural details or arrangement of parts shown since expansion joints embodying the present invention may take various forms. It is also to be understood that the pharseology or terminology herein employed is for the purpose of description and not of limitation, as the scope of the present invention is denoted by the appended claims.

Referring now to the drawings, and particularly to FIG. 1, an embodiment of the expansion joint of this invention is generally indicated at **10**, and is mounted across a gap **11** which is defined by generally parallel edges **12** of adjacent roof decks **13**. The roof decks **13** each represents the deck of a building section, and the gap **11** represents a space between the building sections which provides room for relative movement between the sections as they expand or contract.

The roof decks **13** are provided on their upper surfaces with a suitable roofing insulation **14** which is confined to the decks by insulation stops **15**. Said insulation stops are preferably made of wood, each having one edge thereof substantially coplanar with the adjacent edge **12** of the deck **13** upon which it is mounted. It will be noted that the insulation stops **15** are here shown as generally rectangular in section and afford a substantially flat, upper surface upon which to mount the hereinafter mentioned nailer strips.

The expansion joint **10** is preferably mounted upwardly above the normal roof level to provide normal drainage

of water laterally away from the gap **11**. For this purpose, each insulation stop **15** carries a wooden nailer **16** nailed or otherwise suitably secured to its upper surface. Each nailer **16** has the inner edge thereof disposed substantially coplanar with the inner edge **12** of the adjacent deck **13**, with the outer edge of the nailer being beveled outwardly and downwardly, as indicated at **17**.

The insulation **14** and the nailers **16** are covered with a suitable standard roofing material to provide a weatherproof upper surface, said material comprising, for example, a plurality of layers of roofing felts **18** permeated with a suitable weatherproofing substance such as steep asphalt or the like.

The inner edges of the nailers **16** are each provided with a locking strip **20** having an elongated, flat body portion **21**, an intermediate, laterally outwardly directed flange **22** disposed perpendicular to said body portion, and thereabove, a laterally outwardly directed and downwardly and backwardly hooked upper flange **23**. The locking strip **20** is preferably an elongated extrusion made of a suitable rigid material such as a rigid polyvinyl chloride. Each flat body portion **21** is disposed parallel with and against the inner edge of the adjacent nailer **16** with its flange **22** projecting over and parallel with the adjacent roofing felts **18**. The flanges **22** are secured to the nailers **16** in any suitable manner such as by nails **24** (FIG. 2).

It will be noted that the hooked upper flange **23** is spaced a slight distance upwardly above the flange **22** in each locking strip and is directed laterally outwardly away from the gap **11**.

A pair of nailing strips **30** are provided, one on each side of the gap **11**, each said nailing strip having a flat base **31** which extends from the adjacent body portion **21** of the adjacent locking strip **20** laterally outwardly flatwise over the adjacent roofing felts **18** where it is secured to a nailer **16** by nails **29** (FIG. 2). Each nailing strip **30** has an upstanding angular, S-shaped flange **32** at its inner edge, said flange forming an elongated, inwardly open channel **33** into which the adjacent hooked upper flange **23** of the locking strip projects. Laterally outwardly of said S-shaped flange, each nailing strip **30** here carries an upwardly projecting, inwardly tilted rib **34** which is spaced a substantial distance inwardly from the outermost lateral edge of the base **31**. Said nailing strips **30** are preferably extrusions made from a suitable rigid material such as a rigid polyvinyl chloride.

Elongated side members **35** are formed or molded into interlocking relation with the nailing strips **30**, each side member here having a vertical face **36**, extending upwardly from the associated S-shaped flange **32**, and an oblique outer face **37** which extends upwardly and inwardly generally coplanar with the outer surface of the adjacent rib **34**. It will be readily seen that the pair of side members **35** have upwardly convergent, outer surfaces and upper edges which terminate a substantial disance upwardly above the nailers **16**. The side members **35** are preferably made from a rigid, durable, light weight insulating material, such as a closed cell rigid polyurethane foam, and are preferably molded or formed into interlocking engagement with the flanges **32** of the nailing strips **30**.

The upper edges of the side members **35** are here joined by an arched, flexible center strip **40** which serves as a hinge connection therefor and whch has substantial thickness and preferably is made of a closed cell, flexible, synthetic rubber foam. Elongated strips of woven glass screen **41** are secured adjacent to the edges of the center strip **40** at the concave, inner surface of the arch. Said strips of screen are adhesively bonded to the center strip in any suitable manner and extend beyond the edges of said center strip a substantial distance. The side members **35** are preferably molded around the strips of screen **41** and against the edges of the center strip **40** whereby said side members and said center strip are both bonded and mechanically locked together.

The outer surfaces of the side members **35** and the center strip **40** preferably and as here shown are adhesively bonded to an elastomeric cover of a suitable sheet plastic such as a flexible polyvinyl chloride or neoprene. The cover **42** extends laterally outwardly from the side members **35** and overlies the outer edge portions of the nailing strips **30**, the outer edge portions of the nailers **16** including the bevels **17**, and a substantial portion of the insulation **14**. The outer portions of the cover **42** are preferably secured in place with hot asphalt or the like. The lateral edges of said cover are preferably overlaid by strips of roofing felt **43** which extend laterally outwardly over the layers of roofing felt **18**, the whole being secured together with the hot asphalt. The roof may then be finished off on either side of the expansion joint **10** with crushed stone or small gravel, as indicated at **44**, in a conventional manner.

The expansion joint **10** as hereinabove described is preferably manufactured in strips of substantial length whereby the prefabricated assemblies can be applied to any suitable roof sections. The flexible arch provided by the center strip **40** allows for vertical movement of one of the decks **13** relative to the other, lateral movement of one of the decks relative to the other, and for a substantial amount of relative parallel movement in a horizontal direction between the adjacent edges **12**. It has been found that relative parallel movement or "racking" of the side members **35** is possible to the extent of three inches in a ten foot length of the expansion joint without damage to the joint and with full recovery to its original shape upon release.

FIG. 2 illustrates the manner of assembly of the expansion joint **10** across the gap **11** between roof decks **13**. The locking strips **20** are first nailed in place by the nails **24**. Next, one side member **35** is assembled to one locking strip **20** with its channel **33** engaging the hooked, upper flange **23**. The base **31** of the associated nailing strip **30** is then secured to the adjacent nailer **16** by the nails **29**. For the sake of convenience, the unsecured side edge portions of the cover **42** are at this time folded inwardly and upwardly over the center strip **40** and detachably secured in place by strips of masking tape **45** or the like. Subsequently, the opposite side member **35** is attached to the opposite locking strip **20** with its channel **33** engaging the adjacent hooked upper flange **23** and the nailing strip **20** is nailed into position. Hot asphalt is then applied on either side of the side members **35** and outwardly therefrom, after which the masking tapes **45** are removed and the cover folded downwardly upon the hot asphalt. The strips of roofing felt **43** and the crushed stone or gravel **44** are then added as described above.

FIG. 3 shows, in simplified form, an expansion joint identical with that shown in FIGS. 1 and 2 applied in a situation where the surfaces to be bridged are disposed substantially at right angles to each other. In this situation, a gap **50** between a horizontal roof deck **51** and a vertical parapet **52** is bridged by an expansion joint **10**. A first nailer **53** having a bevel **55** is mounted upon a suitable insulation stop **54** on the deck **51** in the same manner as described in connection with FIGS. 1 and 2. A second, like nailer **53'** having a bevel **55'** is mounted upon the adjacent vertical surface of the parapet **52** with its beveled edge disposed upwardly or away from the gap **50**. Locking strips **20** are secured to the edges of the nailers **53** and **53'** in the same relative manner as described above, and the side members **35** are interlocked with the locking strips **20** and are secured to the nailers **53** and **53'** in exactly the same manner as hereinabove described. However, it will be noted that in this installation one side member **35** is necessarily disposed at right angles to the other side member instead of parallel therewith. This is possible due to the flexibility of the arched center strip **40** which is easily opened to a wider angle. The lateral edge of the cover **42** which extends beyond the first nailer **53** is secured in place in exactly the same

manner as described above. That edge of said cover which extends upwardly beyond the other nailer **53'** is downwardly overlapped by a suitable counterflashing **56** which may be made of the same material as said cover.

FIGS. 4–7 illustrate the roof-to-eave transition structure, generally indicated at **60**, for forming a terminal or finishing end portion for the expansion joint of this invention at the point where it meets the outside edge or eave of the building sections. For purposes of description, the transition structure may be considered as comprising two portions, a cross sectionally uniform front portion **61** and a tapered rear or tail portion **62**. The uniform front portion **61** has an outer shape substantially identical with that of the expansion joint **10** whereas the tail portion **62** tapers downwardly in the direction of the eave for providing a finished and smooth transition from the expansion joint generally to said eave.

As best shown in FIG. 6, the uniform front portion **61** has substantially the same sectional contour and comprises substantially the same elements formed in the same way and assembled in the same manner as the expansion joint **10** shown in FIGS. 1–3. The entire transition structure **60** is adapted to be secured to nailers **16** overlaid by roofing felts **18** and carrying the above described locking strips **20**. The transition structure **60** has a pair of nailing strips **64** which are identical with the nailing strips **30** and comprise a base **65**, an S-shaped inner flange **66** forming a laterally open channel **67**, and an inwardly and upwardly obliquely directed rib **68**. Upstanding, tapered side members **69** are formed upon the nailing strips **64**, and the upper edges of said side members are joined by a center strip **70** which is joined for hinge-forming purposes to the upper edges of said side members in the same manner as described in connection with the expansion joint **10** by means of bonding and strips of woven glass screen **71**. A cover shown at **72** is identical in form and material to the cover **42**, and as well shown in FIG. 4, said cover **72** extends rearwardly toward the outside edge of the building sections a substantial distance beyond the tapered tail portion **62** whereby it can be turned downwardly over said outside edge. The locking strip **20** is secured as before, by nails **24**, and the nailing strips **64** are secured by nails **63**.

The tail portion **62** is tapered away from the front portion **61** in a downward direction but maintains a substantial uniform width at its base and is formed into the nailing strips **64** in the same manner as are the side members **69**. As best shown in FIG. 7, the tail portion comprises tapering or gradually flattening side members **69'** which are preferably formed integrally with and at the same time as the uniformly shaped side members **69**. The center strip **70** continues outwardly over the side edge of the building sections and is preferably secured to the tapered side members **69'** with a continuation of the same strips of woven glass screen shown at **71**. The cover **72** also continues outwardly from the front portion **61** over the tail portion **62** to the outer edge of the building sections.

As best shown in FIG. 5, the outside edges of the building sections are provided with insulation stops **15'** upon which are mounted nailers **16'**. Each nailer **16'** has a bevel **17'** disposed inwardly away from the edge of the building sections, and the nailers **16** on either side of the gap **11** intersect the nailers **16'** at right angles.

The transition structure **60** is positioned with its thinnest portion adjacent to the inner edges of the nailers **16'**, and as best shown in FIG. 5, the center strip **70** extends outwardly toward the side edge of the building sections substantially beyond the transition structure. The cover **72** extends beyond the edge of the building sections and is lapped downwardly and secured to the insulation stops **15'** in any suitable manner such as by nails **75**. The outer portions of the cover **72** are secured with hot asphalt and the lateral edges thereof are preferably overlapped by the roofing felt strips **43** as described in connection with FIGS. 1–3.

At the juncture where the expansion joint **10** meets the transition structure **60**, the cover **42** extends substantially beyond the end of the expansion joint whereby it overlaps the uniform front portion **61** of said transition structure where it is preferably cemented in place to said transition structure to form a secure, weathertight seal.

FIGS. 8 and 9 show a modified form of the transition structure which is generally indicated at **80**. The construction of the transition structure **80** is identical in all respects with the transition structure **60** with the excepion of the cover indicated at **82**. Therefore, only the cover **82** will be described in detail, it being understood that the remainder of the transition structure **80** is disclosed in FIGS. 5, 6 and 7. Where parts or portions of the transition structure remain unchanged, the reference numerals used in the foregoing views will be used.

The variation in the cover **82** comprises a slot or cutout **83**, such as rectangular, which extends from the end of said cover which is disposed over the adjacent side of the building section to a position adjacent to but just short of the uniform front portion **61** of said transition structure. An insert **84** of elastomeric insulating sheet material bridges the slot or cutout **83** and underlies the edges thereof a substantial distance on either side of the center strip **70**. Said insert is adhesively bonded at the underlapping portions thereof by any suitable adhesive compound.

The purpose of the insert **84** is to give added resilience to the cover **82** in the area thereof which passes over the tail portion of the transition structure **80**. This is desirable where the material from which the cover **82** is made is less resilient than that desired in the tapered tail portion or where a less expensive but perfectly adequate material is suitable in all portions of the cover except at the tail portion **85** where it is necessary to use a more expensive material to obtain the desired fit and contour. In the transition structure **60**, the cover **72** is made entirely of a material of suitable resilience to conform to the shape of the tail portion **62**.

It will be understood that many details of the invention as herein described and illustrated may be changed without, however, departing from the spirit of the invention or the scope of the appended claims.

What is claimed is:

1. Expansion joint means for closing a gap between roofs of adjacent building sections, said expansion joint means comprising an elongated cover of flexible sheet material, a strip of flexible foam material secured lengthwise along the center of said cover; a pair of generally wedge shaped side members of rigid foam material secured on either side of said strip with the narrower portions of said wedge shaped side members being adjacent to said strip; each said side member carrying at its wider portion a generally rigid nailing strip having an upstanding portion thereof embedded in the associated member and a flat nailing portion projecting laterally outward y from the base of the member; said cover extending laterally outwardly beyond said nailing portions; said expansion joint means adapted to be folded along the longi udinal center of said strip whereby said nailing portions are disposed in the same general plane and project outwardly in opposite directions for nailing to the roofs on either side of the gap, with said cover extending outwardly beyond said nailing portions for securement to the roofs.

2. Expansion joint means as set forth in claim **1**; locking strips for securing to adjacent edges of the roofs of said building sections on either side of the gap; said locking strips having laterally projecting flange means projecting outwardly away from the gap; and said side members having inwardly open channels at their inner surfaces frictionally engaged by said flange means of said locking strips.

3. Expansion joint means as set forth in claim 1; at least a portion of said side members being tapered in one longitudinal direction toward said nailing strip and affording a transition means for terminating said expansion joint means adjacent to the eaves of the building sections.

4. Expansion joint means as set forth in claim 3; means defining a cutout disposed lengthwise of said expansion joint means in the area thereof covering the tapered portion of said side members; and a sheet insert member secured across said cutout, said insert member having a relatively greater resilience than said cover.

References Cited

UNITED STATES PATENTS

Re. 25,733	2/1965	Patry et al.	52—396
984,092	2/1911	Knepper	52—56
2,412,283	12/1946	O'Connor	52—56
3,093,934	6/1963	Underhill	52—309 X
3,141,206	7/1964	Stephens	52—403 X
3,172,237	3/1965	Bradley	52—396 X

HENRY C. SUTHERLAND, *Primary Examiner.*

A. C. PERHAM, *Examiner.*