US 20110247827A1

(19) **United States**

(12) **Patent Application Publication**

Humphreys

(10) **Pub. No.: US 2011/0247827 A1**

(43) **Pub. Date: Oct. 13, 2011**

(54) **DUAL DRILLING ACTIVITY DRILLING SHIP**

(76) Inventor: **Gavin Humphreys**, Aberdeen (GB)

(21) Appl. No.: **12/755,565**

(22) Filed: **Apr. 7, 2010**

Publication Classification

(51) **Int. Cl.**
E21B 43/01 (2006.01)

(52) **U.S. Cl.** **166/345**

(57) **ABSTRACT**

A single drilling ship may be equipped with two drilling centers, each capable of running risers. Each drilling center has a set of tubulars stored for use in association with that drilling center, those tubulars including risers. However, the risers for one drilling center are of a smaller diameter than the risers for the other drilling center. In the event that a main drilling center drilled well fails, a relief well can then be drilled from the same ship using a secondary drilling center.

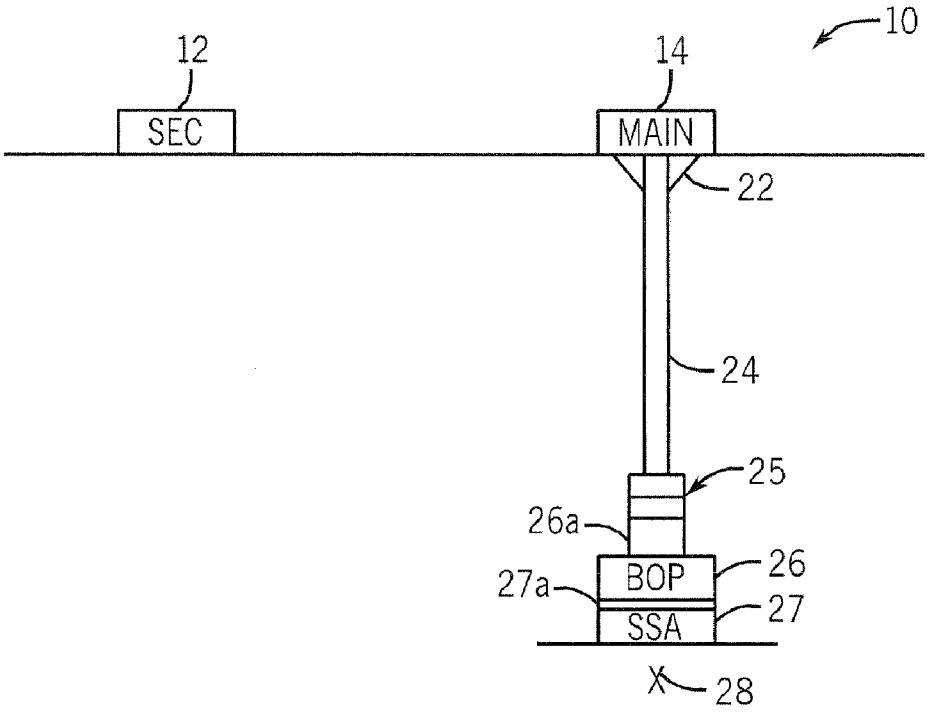

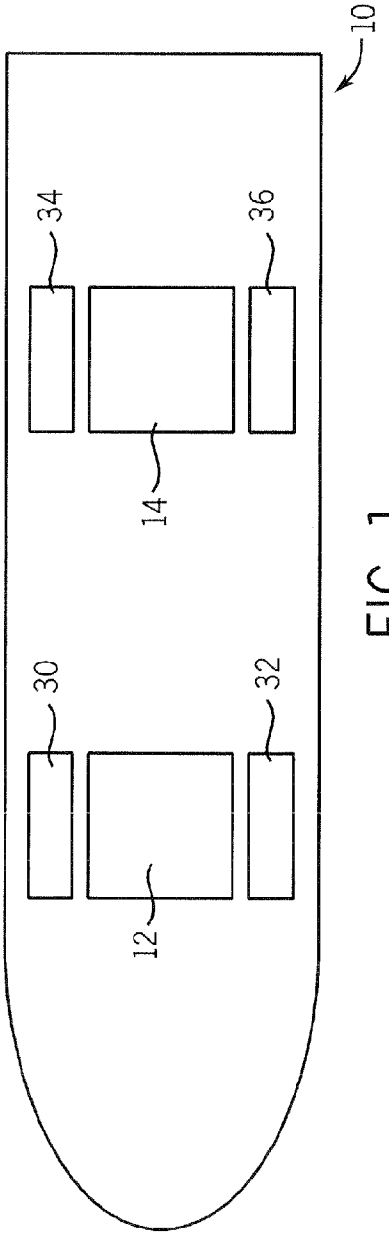

FIG. 1

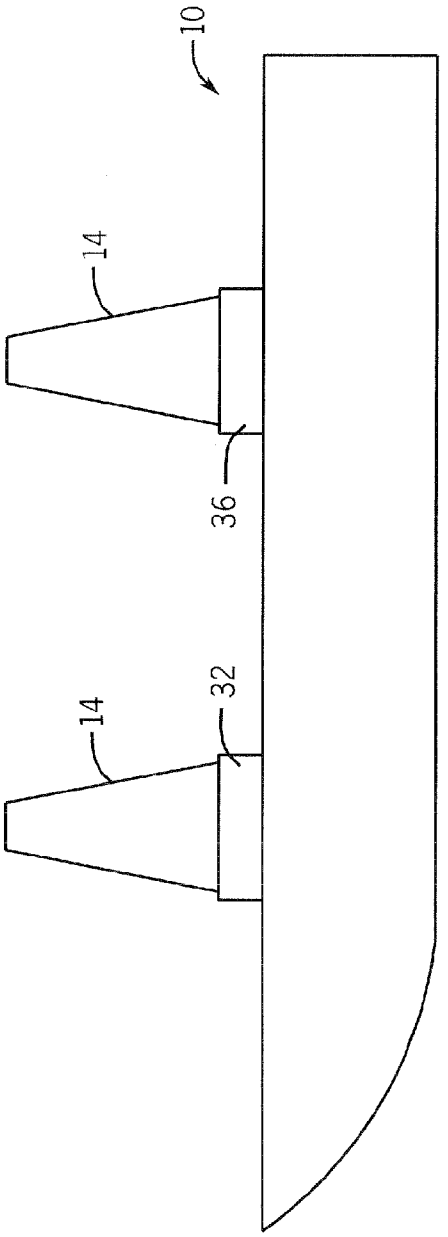

FIG. 2

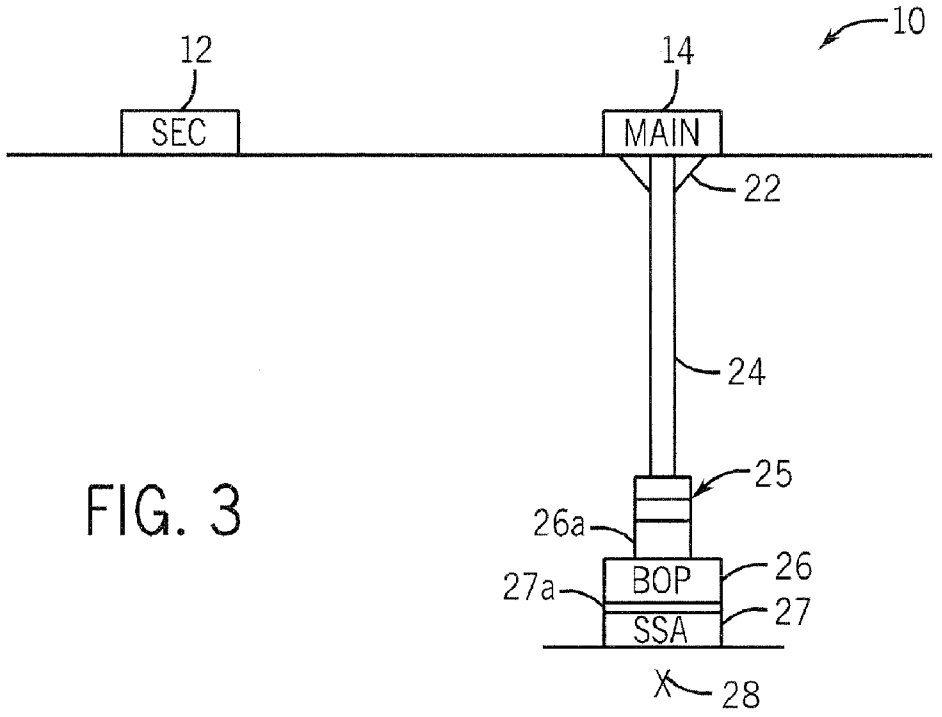
10
12
14
SEC
MAIN
22
24
25
26a
BOP
26
27a
SSA
27
28

FIG. 3

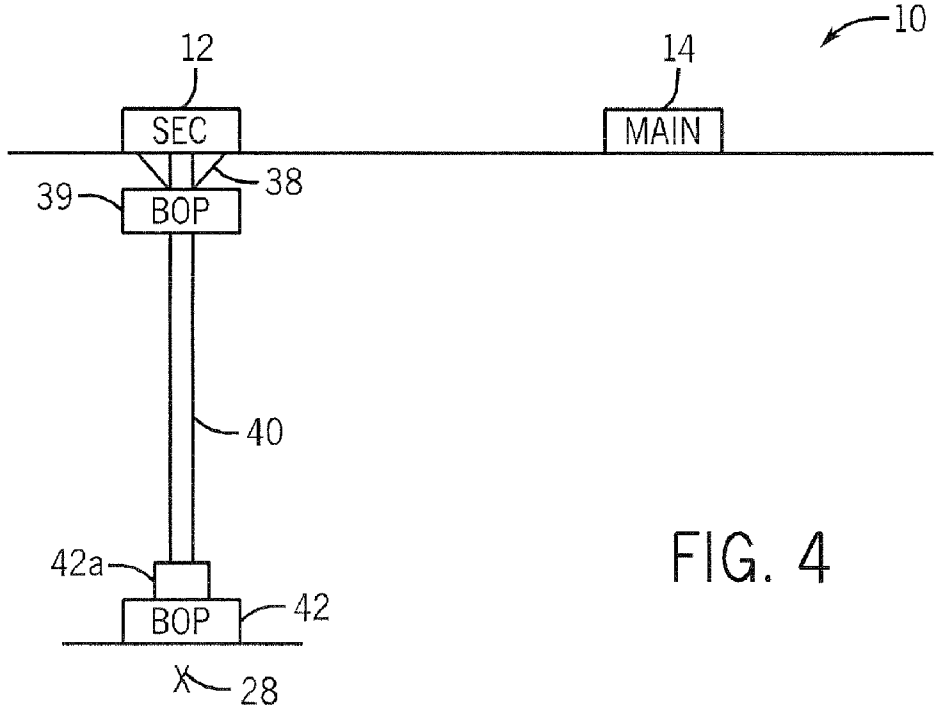
10
12
14
SEC
MAIN
38
39
BOP
40
42a
BOP
42
28

FIG. 4

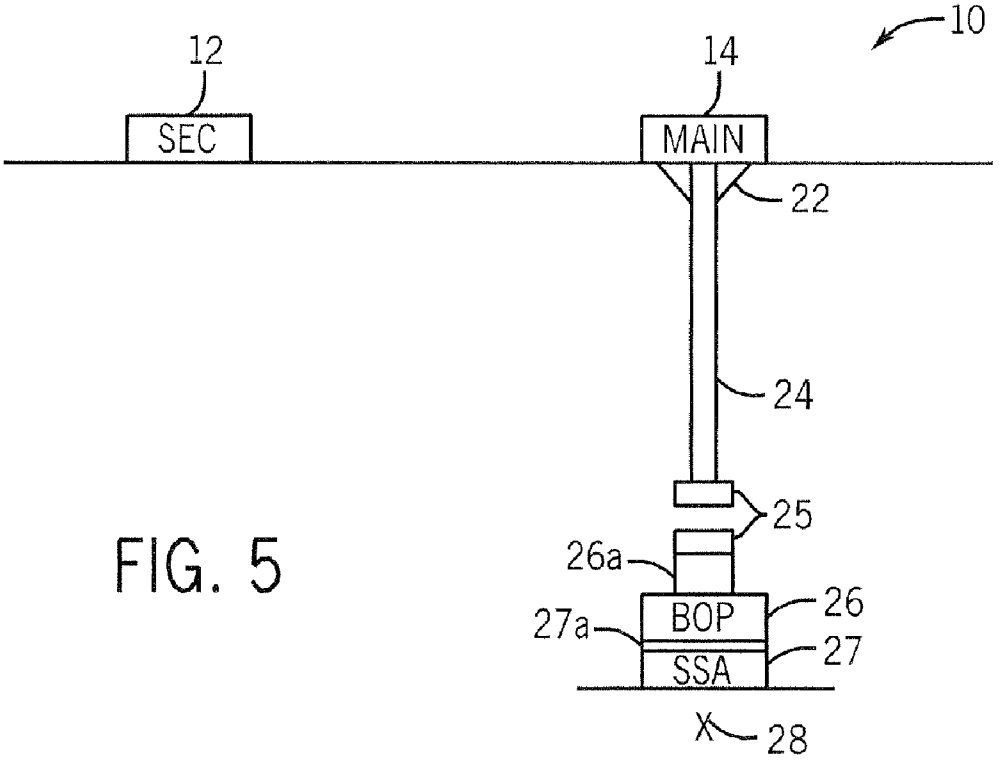

FIG. 5

DUAL DRILLING ACTIVITY DRILLING SHIP

BACKGROUND

[0001] This invention relates generally to offshore drilling operations.

[0002] Offshore drilling operations may be implemented with a variety of different platforms which may be secured to the seabed floor. These platforms may be effective at shallower depths. In greater depths, it is generally desirable to use ships or semi-submersible rigs to conduct such deep water drilling operations.

[0003] These ships or rigs may be precisely positioned at a desired location so that the drilling equipment may be operated to precisely drill wells at desired locations. The ship or rig may be maintained in position under dynamic positioning, even in extreme seas. As used herein, a "ship" is a floating platform capable of propulsion on its own or by being pushed, pulled, or towed. It includes semi-submersible rigs and self-propelled vessels.

[0004] As a result, a number of exploration wells may be drilled, one after another, in a deep water offshore environment, such as the outer continental shelf of the United States, Africa, Asia, or Western Europe. However, the large number of operations must be performed when successfully drilling a number of exploration wells, even in the same area, may be extremely time consuming because of the complexity of deep water operations.

[0005] With a conventional ship having a single drilling platform, it is impossible to perform multiple operations in parallel. Thus, the time periods needed to complete each well may be relatively long. Since, generally, these drilling ships are operated on a rental basis, the longer than it takes to drill the well, the more expensive is the resulting well.

[0006] So called dual activity drilling ships are known. In these ships, a pair of derricks may be provided on the ship, which provide a structural support for underlying drilling tubulars. The dual derricks may be operated in some degree in parallel. For example, while one operation is occurring on one derrick, another operation may be implemented on another derrick. However, any in case, only one well may be drilled, one of the drilling centers being used for drilling and the other center being used for supporting a single drilling operation.

BRIEF DESCRIPTION OF THE DRAWINGS

[0007] FIG. **1** is a top plan view of a drilling ship in accordance with one embodiment;

[0008] FIG. **2** is a side elevational view of the ship shown in FIG. **1** in accordance with one embodiment;

[0009] FIG. **3** is a schematic depiction of a drilling operation from the main drilling center on the ship shown in FIG. **2** in accordance with one embodiment;

[0010] FIG. **4** is a schematic depiction of drilling from the secondary drilling center in accordance with one embodiment; and

[0011] FIG. **5** is a schematic depiction of the disconnection of the main drilling center from the well head in response to a failure, in accordance with one embodiment.

DETAILED DESCRIPTION

[0012] Referring to FIG. **1**, a dual drilling activity drilling ship **10** may be a ship capable of drilling operations in deep and ultra deep water. The ship **10** may also be a semi-submersible rig, as well. The ship may be equipped with conventional dynamic positioning controls which enable the ship to be precisely positioned at a precisely determined location. Moreover, the ship may be held precisely in position during drilling operations pursuant to computer control.

[0013] In some embodiments, a main drilling center **14** and a secondary drilling center **12** may be provided. Each of these drilling centers is capable of running risers. In some embodiments, the main drilling center **14** is used for primary drilling operations. In the event of a failure, the main drilling center can be disconnected, the ship can be moved to position the secondary drilling center **12**, and risers may be lowered from the secondary drilling center to drill a relief well in association with the failed drilling operation from the main drill center.

[0014] Dual drilling activity drilling ships may have a wide variety of applications. For example, in arctic drilling operations, it is generally desired to have a backup drill ship on site. That way, if the primary drill ship runs into a problem, the secondary drill ship can take over. But given the cost of drilling ships, having two ships on site is extremely expensive. In accordance with some embodiments of the present invention, a single drill ship can perform the same capabilities that required two drilling ships in the past. It should be noted that conventional dual activity drill ships cannot drill from two different centers and do not have the capability of supplying risers for marine drilling from two different centers.

[0015] In one embodiment, the main and secondary drilling centers may be implemented by hydraulic RAM devices. In other embodiments, derricks or superstructures may be provided. Such derricks or superstructures may provide structural support for the tubulars hung from such derricks.

[0016] In contrast, with hydraulic RAM systems, the tubulars may be supported directly on the ship's deck. This avoids the need for expensive, heavy derricks to support the tubulars. However, in some embodiments, even using a hydraulic system, masts, or guides may be provided to guide the tubulars when they are in their uphauled positions.

[0017] Thus, depending on the nature of the centers **12** and **14**, different tubular storage facilities may be utilized. For example, when a derrick system is utilized, the derricks are of sufficient strength that tubulars may be stored by simply leaning them against the insides of the derricks. In other cases, tubular storage systems, set back envelopes, and racks may be provided to hold the assembled or partially assembled tubulars.

[0018] As shown in FIG. **1**, in accordance with one embodiment, racks **30** and **32** are associated with the secondary drilling center **12** and racks **34** and **36** may be associated with the main drilling center **14**. The racks **34** and **36** may hold a variety of tubulars, including risers. Similarly, the racks **30** and **32**, associated with the secondary drilling center, may also hold a variety of tubulars, including risers. However, in some embodiments, the risers used in association with the secondary drilling center may be smaller diameter risers to reduce the overall load on the ship, while still providing full drilling capability from the secondary drilling center.

[0019] For example, a conventional marine drilling riser may have a nominal 21¼ inches inside diameter, while the risers stored in the racks **30** and **32**, associated with the secondary drilling center, may be a smaller diameter, such as 13⅝ inch internal diameter, 10,000 psi risers.

[0020] While, in FIG. **2**, the racks **32** and **36** are shown to the port side of the drilling centers **12** and **14**, the racks may be positioned fore and aft or both fore and aft and port and

starboard positions in some embodiments. Moreover, as described above, in some embodiments, separate racks may not be needed and the tubulars may be simply leaned against the drilling centers **12** and **14** when possible.

[0021] Conventional equipment may be used for advancing, running, withdrawing, lifting, or rotating the tubulars to the seabed and, ultimately, into the seabed floor. In this regard, waste, top drives, sheaves, draw works, rotary tables, traveling blocks, motion compensators, hydraulic RAMS, or any other known equipment may be utilized. The hydraulic RAM may support tubulars on the deck, but derricks may support tubulars from above the deck. The present invention is in no way limited to any particular equipment.

[0022] Referring now to FIG. **3**, the main drilling center **14** includes riser tensioners **22**. It also includes the marine riser **24**, which may be nominally 21¼ inch outside diameter conventional marine riser in one embodiment. A mechanical override emergency riser disconnector **25** may be provided at the bottom of the riser **24**. Connected to the disconnector **25** may be a lower marine riser package (LMRP) **26***a*. The LMRP **26***a* functions to disconnect the blowup preventer (BOP) **26** which is connected to the LMRP **26***a* by a frangible connection. Finally, the BOP **26** may, in one embodiment, be a conventional 18¾ inch inside diameter subsea blowout preventer in one embodiment.

[0023] A lower marine riser package (LMRP) **27** is coupled to the blowout preventer **26** to disconnect the upper components from the underlying subsea shutoff assembly (SSA) **27**. In one embodiment, the SSA **27** may have controls that are independent from the controls used for the BOP **26**. In one embodiment, the subsea shutoff assembly may be 18¾ inch internal diameter, conventional equipment.

[0024] Finally, a subsea wellhead **28** may be cemented into the seabed. The wellhead may be an 18¾ inch inside diameter conventional wellhead, in some embodiments.

[0025] Thus, the wellhead **28** may be established from the main drilling center **14** and if no problems develop, the secondary drilling center **12** may not be needed. However, in some embodiments, dual activity may be implemented so that some tubulars may be made up in advance from the secondary drilling center **12** to facilitate drilling from the main drilling center **14**. In other embodiments, the drilling center **12** is only held for backup in case a failure occurs in connection with the main drilling center **14**.

[0026] Referring to FIG. **4**, in the case where the secondary drilling center **12** is being activated, a blowout preventer with a slim high pressure riser **40** enables drilling of a relief well from the secondary well center **12**. This may be advantageous when a failure occurs in the main drilling center and the main drilling center can no longer be operated. For safety reasons, it may be desired to provide a relief well as soon as possible. However, a second drilling ship may not be needed, in some embodiments, since this capability may be provided on board a single drilling ship.

[0027] The riser tensioners **38** may be permanently installed on the secondary well center **12**. An upper blowout preventer **39** may be provided. In one embodiment, the BOP **39** may be a 13⅝ inch inside diameter blowout preventer. The riser **40** may be a smaller diameter riser that is capable of handling 10,000 psi pressure and having an internal diameter of 13⅝ inch in one embodiment. Because it has a smaller diameter, the riser **40** can be more easily carried on the same ship with the riser **24** without overweighting the ship, in some embodiments.

[0028] A lower marine riser package (LMRP) **42***a* is used for disconnecting the riser **40** from the lower blowout preventer **42**. In one embodiment, the lower blowout preventer **42** may be a 13⅝ inch diameter conventional blowout preventer. A subsea wellhead **28** with a slim internal diameter may be cemented into the seabed. In one embodiment, it may have an 18¾ inch inside diameter.

[0029] One application for the ship **10** may be the situation where there is an initial, uncontrolled flow of hydrocarbons through the main drilling center **14**, including a blowout, with the well finally contained by closing in the well at the RAMS on the independently controlled subsea shutoff assembly **27**. In this worse case scenario, the riser **24** cannot be released from the blowout preventer **26** due to the total failure of the controls cable and acoustic release device on the blowout preventer **26** and independent release of the LMRP **27***a* between the BOP **26** and SSA **27**. In this situation, it is necessary to control the release of the riser **24** just above the LMRP **26***a* by activating the mechanical override riser disconnect **25**, as indicated in FIG. **5**. The situation shown in FIG. **5** would be one example where drilling a relief well would be required to control internal pressures of the well or to control uncontrolled flow of hydrocarbons from the well in the subsea surface environment because of external blowout.

[0030] Thus, as shown in FIG. **4**, the relief well may be drilled utilizing the same ship **10**. Initially, the drilling ship **10** is moved to locate the secondary drilling center **12** aligned over a relief well surface location. The relief well may be spuded, utilizing the secondary well center **12**. With conductor and surface pipe run and cemented, the subsea blowout preventer and riser configuration shown in FIG. **4** may be run. Then, the subsea blowout preventer and riser system and tensioners **38** may be hung off and tensioned and the telescopic joint extended to the well center **12**. Then the relief well may be drilled from the secondary well center.

[0031] In some embodiments, the main drilling center and the secondary drilling center may carry 5000 feet of riser at each center. This is sufficient riser length for drilling in many offshore regions, including the arctic, where the maximum depth is about 3500 feet.

[0032] References throughout this specification to "one embodiment" or "an embodiment" mean that a particular feature, structure, or characteristic described in connection with the embodiment is included in at least one implementation encompassed within the present invention. Thus, appearances of the phrase "one embodiment" or "in an embodiment" are not necessarily referring to the same embodiment. Furthermore, the particular features, structures, or characteristics may be instituted in other suitable forms other than the particular embodiment illustrated and all such forms may be encompassed within the claims of the present application.

[0033] While the present invention has been described with respect to a limited number of embodiments, those skilled in the art will appreciate numerous modifications and variations therefrom. It is intended that the appended claims cover all such modifications and variations as fall within the true spirit and scope of this present invention.

What is claimed is:

1. A method comprising:

outfitting a drilling ship with two separate and distinct drilling centers, each capable of drilling a well; and

providing marine risers for each of said drilling centers, the marine risers for one of the drilling centers being of a smaller diameter than the marine risers for the other of said drilling centers.

2. The method of claim **1** including providing storage for marine risers in association with each of said drilling centers.

3. The method of claim **1** including providing equipment to enable a relief well to be drilled from the same ship that drilled a failed well.

4. The method of claim **1** including, in association with a secondary drilling center having smaller diameter risers, providing two blowout preventers.

5. The method of claim **4** including permanently installing riser tensioners on said secondary drilling center.

6. The method of claim **1** including connecting risers to a lower blowout preventer using a lower marine riser package.

7. The method of claim **6** including providing an upper blowout preventer between said tensioner and said risers.

8. The method of claim **4** including providing a lower marine riser package between a blowout preventer on said secondary drilling center and said risers.

9. The method of claim **1** including providing a mechanical override emergency riser disconnector on the drilling center with larger diameter risers.

10. The method of claim **9** including connecting the disconnector to a lower marine riser package.

11. The method of claim **1** including providing a subsea shutoff assembly for the drilling center with the larger diameter risers.

12. A drilling ship comprising:

a first drilling center including storage to store first marine risers;

a second drilling center to drill a second well from the same ship, the second drilling center including storage to store second marine risers, said second marine risers having a smaller diameter than said first marine risers.

13. The ship of claim **12** to enable a relief well to be drilled from said second drilling center when a well drilled from said first drilling center has failed.

14. The ship of claim **12** including two blowout preventers for said second drilling center.

15. The ship of claim **14** including a riser tensioner permanently installed on said second drilling center.

16. The ship of claim **14** including a lower blowout preventer connected to the marine risers via a lower marine riser package.

17. The ship of claim **16** including an upper blowout preventer between said tensioner and said risers.

18. The ship of claim **14** including a lower marine riser package between a blowout preventer on said second drilling center and said risers.

19. The ship of claim **12** including a mechanical override emergency riser disconnector on the second drilling center.

20. The ship of claim **19** including said disconnector connected to a lower marine riser package.

21. The ship of claim **12** wherein said second drilling center includes two blowout preventers and said first drilling center includes only one blowout preventer.

* * * * *